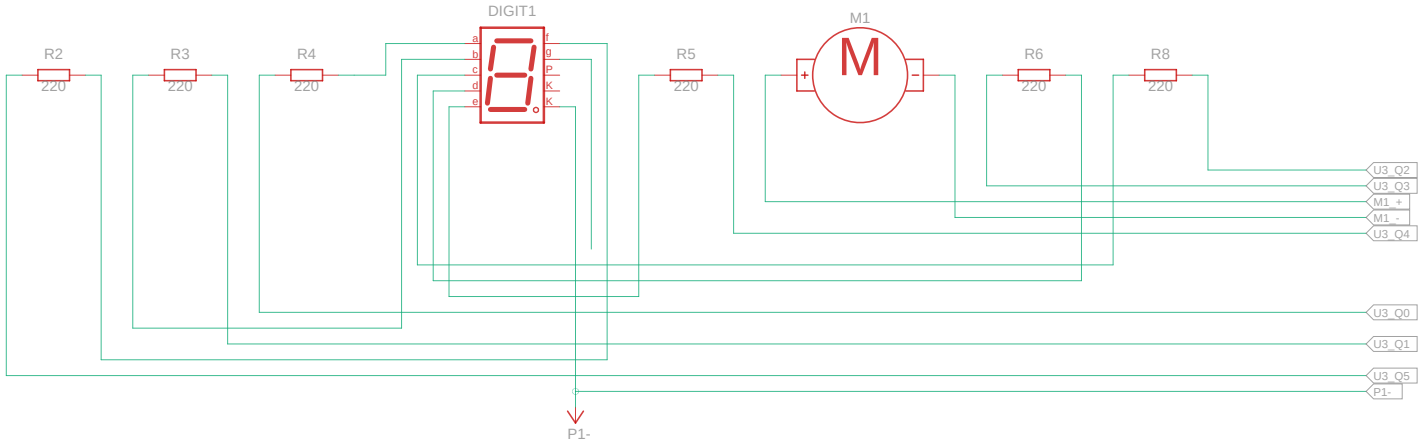

Made with Tinkercad®

Title: Sechs	
Date: 2.2.2026, 21:43:10	Sheet: 1/2

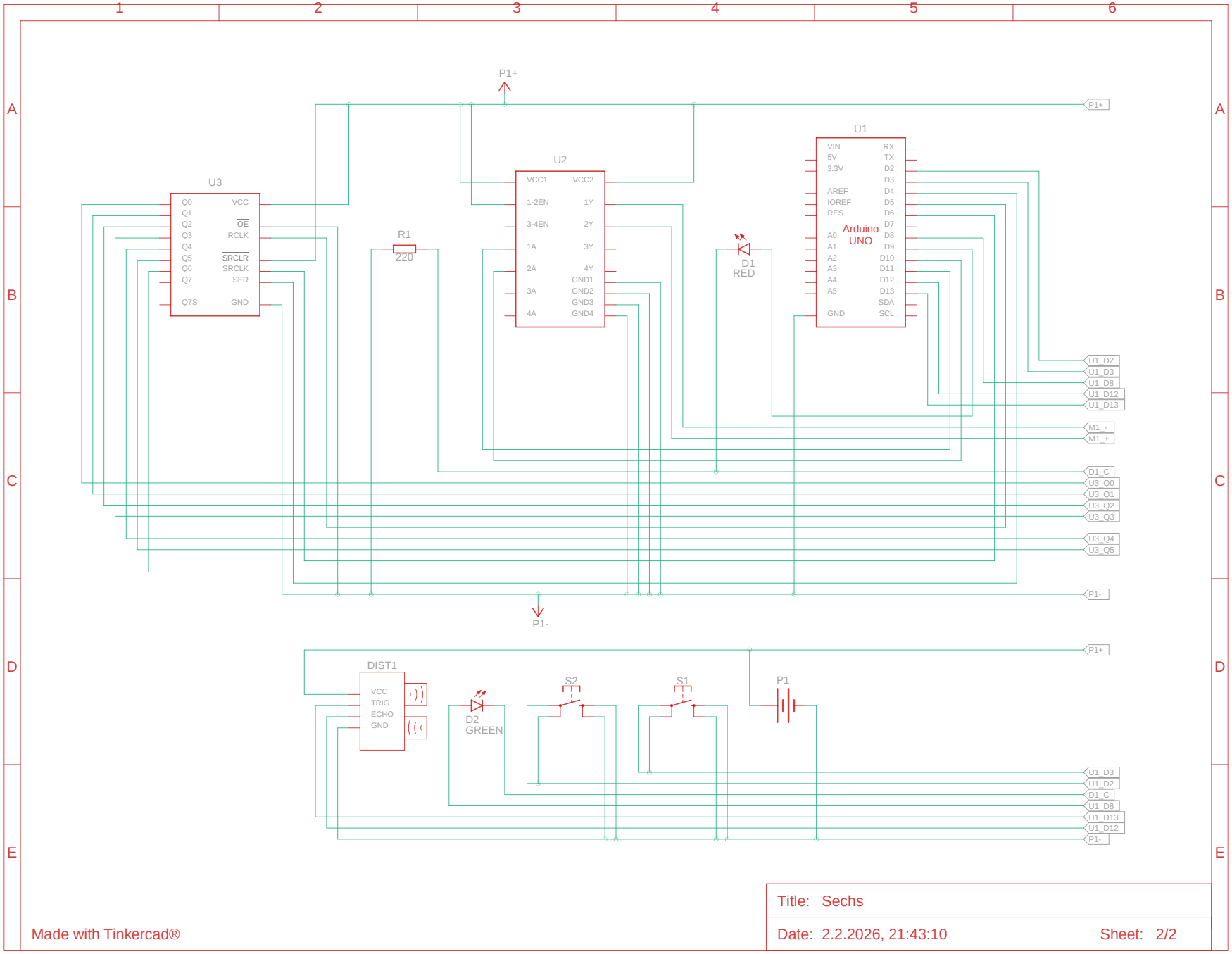

Made with Tinkercad®

Title: Sechs	
Date: 2.2.2026, 21:43:10	Sheet: 2/2