Department of Physics
University of Cambridge

IB Lent

"Extended Investigation"
Physics A & B
2025-26

Contents

Part 1: The "Extended Investigation" classes

1. Safety 1
2. Introduction 2
   2.1 Organisation 2
   2.2 Records of laboratory work 3
3. Assessment 4
   3.1 Lab notebooks 5
   3.2 Group presentation 5
4. Late submission 6
5. Attendance 7
6. Policy on changing days 7

Part 2: This Term's investigation

1. Introduction 8
2. Notes on the investigation and apparatus 8
3. Hints 9

Health and Safety at Work Act, 1974

The following sentences summarise the content of this act as it applies to the day-to-day running of the practical classes.

- Each employee of the University and each student working in the University has a responsibility to take care of his or her own safety and the safety of others.
- By example and training, staff and students alike should be encouraged to adopt an approach to their work in which good safety practice is regarded as normal.
- An employer is to ensure, so far as is reasonably practical, the safety of his or her employees; an employee is to take reasonable care for his or her own health and safety, and that of other persons who may be affected by his or her acts or omissions at work.
- The Act places the duty on all persons (*and it is this duty that applies to students*) that they shall not intentionally or recklessly interfere with or misuse anything provided in the interests of health, safety or welfare.

Joint work and cheating

This term's investigation is meant to be carried out in a team, and so we expect there to be significant discussion between team members, but less so with Heads of Class, since we want each team to create its own ideas and innovate. It is important that in your team report and presentation, only your group's work is presented. Copying from the work or others and submitting it as your own report is cheating. Falsifying and/or inventing data is also cheating. If any team is found cheating, the matter will be reported to the Head of Department, who will usually refer the incident to the University Proctors.

Part 1: The Lent term "Extended Investigation" sessions

1 Safety

In general, safety in the class is not a serious problem, but there are a few minor hazards of which you should be aware.

Lasers

Any laser with a power output greater than 1 mW constitutes a hazard. Most of the lasers used in the class are less powerful than this and beams from any 2 mW lasers are reduced and spread. However, all of you should observe the following precautions.

- **Never** look along the axis towards a laser beam, even if the beam has been divided by a beamsplitter.
- Do **not** introduce highly reflective objects (e.g. metals) into the beam without taking special care to avoid strong reflection.
- **Always** arrange an absorbent or scattering screen as a beam stop, especially when you leave the apparatus for any length of time. Do not let the beam 'escape' from your bench to annoy others.

This information is based on the safe upper limits for optical flux density recommended by the British Standards Institution, viz. at the surface of the eye:

Long-term viewing $3 \times 10^{-3}\,\mathrm{Wm^{-2}}$. You would find this uncomfortably bright for long-term viewing.

Accidental viewing $1.5\,\mathrm{Wm^{-2}}$. This is roughly the intensity in the split laser beam when it has spread to a diameter of about 12 mm in the Fraunhofer experiments. You would find it dazzlingly bright (but **do not** try).

A laser beam can easily be reflected not only from the mirrors provided but also off other metal surfaces present in the experiment. You should take care to avoid these spurious reflections and ensure they do not extend beyond your bench.

2 Introduction

The Lent term's Extended Investigation class forms a transition between the single-day experiments you have carried out so far, and the longer more open-ended experiments that are available as part of the Part II course. The focus is still on the planning and careful execution of experiments. The physics underlying this term's extended investigation was covered in the Michaelmas term's "Oscillations, Waves and Optics" course.

The principal differences in the Extended Investigation class, as compared to your earlier classes, are four-fold:

- You will work in your preassigned teams, usually of three to five people, so that you will need to learn and develop your team-working skills;
- You will undertake an extended investigation over two sessions of the class;
- There will be a much higher emphasis on how carefully and how well your experiments are undertaken and justified when your work is assessed;
- Each team will not only have to submit its lab notebook for assessment, but will also have to deliver a 12 minute PowerPoint (or equivalent) presentation during a 1h15m presentation session in Week 8, presenting their results.

In addition, the manual (this document) is not at all explicit about what to measure or how to set up the apparatus. The goal is for each team to have the freedom to determine its own regions of emphasis and how best to secure accurate and precise quantitative data using the simple apparatus provided. To realise this, you will need to develop an approach which goes beyond simply following instructions.

If you have a relevant disability, including colour-blindness or dyslexia, that may affect your performance in the class, please remind your Heads of Class at the start of the sessions so that this can be recorded.

2.1 Organisation

In Weeks 6 and 7 of the Lent term, you will work in groups of three to five students and undertake a single extended investigation over the course of two eight-hour sessions (or four 4-hour sessions for those students attending on the split Fri/Mon classes). All of the groups will undertake the same experimental task and will have the same apparatus (apart from the laser to be characterised, which will vary from bench to bench).

This year, there are up to 15 teams of students per class, each of which will be allocated a lab-bench. When you enter the lab, you should identify which team you are in, locate your team's bench and meet your team partners - in most cases, you will be in the same team as for Week 1 and for your

The Heads of Class have been briefed to give you much less guidance in the class than you have been used to. **Demonstrators will not be present in class**. One aim of these classes is to encourage you to work together and figure things out for yourself, rather than ask for direction at every stage.

poster activity. You can then start planning how you will work as a team to meet your goal.

You may need instruction on using the measuring microscope. Please consult a Head of Class or the technicians for assistance, for checking your progress and for troubleshooting any faulty apparatus.

At the end of each of your sessions, you must date-stamp your team's lab notebook and leave it at the front of the class. **Students in the Fri/Mon class should not take their team lab books home over the weekend.** Each team will be allowed to take its notebook away after its second session to allow the team presentation to be finalized. Your group's lab book must be handed in when you give the presentation in Week 8.

2.2 Records of laboratory work

Each team will be provided with a single new lab notebook, in which to record its experimental planning, execution, data and analysis. All team members can contribute to this record, but you should expect that Heads of Class may wish to know which individual was responsible for which parts. It is therefore strongly recommended that, at the beginning of each entry, the person making the entry use the margin to insert their initials or crsid legibly in the book. Your lab notebook must be presented as your team's complete record of its experimental work - it should thus contain not only results but also information about why you chose to measure what you did, how you undertook the measurements and at what level you trust your results.

You will need to strike a balance between writing enough to allow you to reconstruct exactly what you did in each experiment and why (and exactly what the results were), but not substantially repeating material from sources such as your lecture notes or books - sources that could be accessed straightforwardly.

When you leave the class after each session, you must stamp the end of your notes, with the stamp on the front bench, and place your notebook in a "demonstrators box" for the appropriate day. Each team will, of course, be able to take its notebook away when it comes to preparing its presentation, and can add material to the book during that period but only if it is related to work done on your team's presentation.

All content added to your lab notebook outside the classes must be identified as such explicitly for the examiners.

Tidiness in a laboratory notebook is a great asset, but it is not obligatory. Heads of Class will definitely understand how notebooks become untidy. **Legibility and clarity, however, are obligatory**. As you complete each part of your investigation, you should ensure that all essential data have been clearly recorded and displayed graphically if this is appropriate. When

taking readings in order to plot a graph, you should record them in your notebook first. A spreadsheet is sometimes an alternative, in which case a printed copy of the data must be stuck in your book.

Because you will be given rather little guidance as to what specific experiments to undertake, it is **vital that you record your team's thinking and planning of its investigation**. This is not something that you may have been used to doing in earlier classes, but it will be part of the formal assessment of your lab notebook for the investigation.

3 Assessment

An important part of teamwork is forging the ability to ensure appropriate and equitable contribution to the team effort from each team member.

Assessment of the extended investigation will differ from that of your previous experimental work. Heads of Class and several Demonstrators will assess a presentation from each team, and one of the Heads of Class will examine the group's lab notebook. In the first instance, each team member will receive the same mark for their work, but Heads of Class will expect each team member to participate in the presentation and may ask questions of any team member. You will need to decide as a team how to structure participation in the presentation.

The total mark allocated for the Extended Investigation will be 25 marks, compared to 14 marks for a normal practical session. These marks will be awarded approximately equally on the basis of the quality of the team's experimental results and analysis, and on the quality of the presentation and subsequent "question-and-answer" session.

The lab notebooks, as well as the presentation, will be included in the assessment of the Extended Investigation. In our assessment, we will be looking for the following areas of performance:

1. Evidence of thoughtful planning, both regarding what experiments to undertake (and the justification of this) and how best to undertake them;

2. Quality of the experimental data: were the measurements made well enough to address the goals of the investigation, and have their errors been properly estimated?

3. Quality of analysis: have the data been scrutinised and assessed quantitatively and sensibly?

4. Quality of presentation (slides): Are the presentation slides clear? Does the presentation have a logical structure?

5. Quality of presentation (oral): have the results been presented in a coherent fashion? Did the speakers engage with the audience?

It is essential that you realise we will not be looking for 'perfection', but for evidence of careful, thoughtful, and skilful planning and execution of your investigation and subsequent presentation. Students who simply believe that they have to "get the right answer" will probably be disappointed in their assessment.

3.1 Lab notebooks

As mentioned in Section 2.2, each team must submit its lab notebook as a record of its activities in the class. One of the Heads of Class will inspect this as part of the assessment, but you should be aware that your notebook should not be the equivalent of a Scientific write-up or a research paper.

Rather, it should be a clear record of your planning, execution and interpretation of your experiments and measurements. Your raw data must be included, as should be any analysis of these. You are also free to include some coverage of the background theory for your experiment, but you **need not** reproduce long derivations or irrelevant theory. Your Part IB lecture notes may be used as a reference in your notebook, along with any textbooks and other relevant material you feel is appropriate.

A key element of your lab notebook is that it should present a **plan for your experimental work**, before you start taking any detailed measurements. You may want to discuss this with a Head of Class so as to help ensure that you do not run out of time to make your measurements in the time available.

A component of the team's marks will be awarded on the basis of the content of its laboratory notebook, so you should pay some attention to how well it is maintained, and how easy it will be for Heads of Class to navigate it as they are reading through it.

3.2 Group presentation

In week 8, each team will give a 12 minute presentation (plus 3 minutes for questions at the end), on the results of their investigation. A strict time limit will be imposed. The presentations will be given in-person **in the Cluster Seminar Room**, to an audience of a few other student groups, several demonstrators, and Heads of Class.

For each practical class (Thursday, Friday/Monday, or Tuesday) there will be three 1 hour and 15 min long presentation sessions (9 in total). For the Thursday groups, the presentation sessions are planned on Thursday, March 12 (from 11:15-12:30 - groups 1-5, from 13:30-14:45 - groups 6-10, and from 15:15-16:30-groups 11-15). For the Friday/Monday group, the presentation sessions are on Monday, March 16th (from 14:00-15:00 - groups 1-4, from 15:15-16:15 - groups 5-8, and from 16:30-17:30 - groups 9-13). For the Tuesday groups, the presentation sessions are on Tuesday, March 17th (from 11:15-12:30 - groups 1-5, from 13:30-14:45 - groups 6-10, and from 15:15-16:30 - groups 11-15). **Please keep your session time available in your agenda.**

All group members must participate in the presentation, and the group will have to answer a few questions afterwards. All students are required to attend all presentations in their session.

We expect that most students will use Powerpoint (or an equivalent product) for preparing their presentation. The final presentation file must be uploaded at least 30 minutes before the start of the session (a link will be provided by email. This is to avoid wasting time in setting up the presentation.

Presentations will be assessed by Heads of Class and demonstrators and graded accordingly. Each group will submit its Laboratory Notebook to the Head of Class at the presentation, and it will be assessed as part of the marking process. As a reminder, the criteria used during assessment are provided at the start of section 3 in this lab manual.

Preparing and delivering good presentations is a multifaceted task, and requires you to think about a suitable narrative structure, design good, clear slides, and deliver them in an effective manner. Guidance on developing a good narrative and preparing high-quality slides is available in the handout section of the Part IB practicals on the TiS (https://www-teach.phy.cam.ac.uk/students/courses/part-ib-practicals/93). At the start of Week 6, during the introduction to the extended investigation, there will be a demonstration and discussion on giving presentations, which will support you in developing the important skill of giving effective presentations.

To encourage you to pay attention to what works well in a presentation and what doesn't, all students are expected to make brief notes on all presentations (except their own) during their allocated session. These notes need to include things that worked well and things that didn't work well. The notes need to be given to the Head of Class at the end of the presentation session. The quality of these notes will not be assessed, but submission of an adequately completed sheet will contribute towards your final mark.

Practising delivering a presentation beforehand is crucial to ensure clarity and timeliness. To emphasise the importance of a practice presentation, all groups are expected to upload a video (or a link to a video) of a practice presentation in which all group members are participating. Several meeting rooms will be made available for this during the final 1.5 hours of the week 7 session, with each group being allocated a 30 min time-slot. The video should be of the whole 12-minute presentation. The video can be taken with a mobile phone camera or by recording a Microsoft Teams meeting using the camera in the meeting room. The submission of an acceptable practice video will contribute towards the overall mark for your presentation. However, the quality of the practice video itself will not be assessed.

4 Late submission of work

In accordance with the University's regulations, work submitted after the advertised deadline will **not** count towards your final examination mark, unless the Department grants an extension of time on the grounds that there are mitigating circumstances. In the case of presentations, the end of the

timetabled period for giving a group's talk represents the final deadline for submission of work by that group. If a member of a group does not participate in the presentation then they will not be allocated marks for that component of the exercise. Any application for an extension should be made by your college Tutor to the Deputy Head of Department (Teaching), c/o Teaching Office, Cavendish Laboratory, (teaching-office@phy.cam.ac.uk).

5 Attendance

You should ask your Tutor to contact the overall Head of Class, Prof. Tijmen Euser (te287@cam.ac.uk), if you miss a class due to illness, confirming the reason for your absence. Under **no** circumstances will rowing or other sport events be treated as a legitimate excuse, however important this activity is to you or to your college.

There will be no catch-up sessions available for the extended investigation, and so it is important that your absence is recorded in your group's lab notebook. If you miss a practical for a legitimate reason, such as illness, you will not be penalised.

If you become ill before or during a practical, contact your Head of Class straightaway.

6 Policy on changing days

Every effort is made to run the class to the maximum convenience of all concerned, and the staff will always try to do their best to accommodate any reasonable requests. Because you will be working in groups, any day changes can only be considered if two full groups can swap.

Any such change must be agreed with the Heads of Class and requires the signature of all of the students involved in advance. Given that the class only runs for two weeks, we seriously discourage such swaps. Changes for non-academic reasons will not normally be allowed.

Part 2: This Lent's investigation

1 Introduction

This year's extended investigation is a task of measurement exploiting the theory of diffraction to which you have been introduced. You will have covered the relevant physics in the Michaelmas term "Oscillations, Waves and Optics" course. Please note the following:

- Read the notes on laser safety at the start of the lab manual before starting your experiments;
- Never touch any of the optical surfaces: mirrors, lenses etc, even with clean fingers: the natural grease on your fingers you will damage them;
- Never touch the middle of your aperture plate: fingerprints are very hard to remove without damaging the plates.

There are multiple sources of information on diffraction, including most optics textbooks and your notes from the "Oscillations, Waves and Optics" lecture course. You should feel free to bring these along to the class if you wish.

2 Notes on the investigation and apparatus

The goal for each team in the extended investigation is to answer the following question:

How precisely can you determine the wavelength of a fibre-coupled diode laser using diffraction experiments alone?

That is, how well can you determine the wavelength, λ, of the fibre-coupled laser on your lab bench? As accurate and precise a value of λ as possible is what the Heads of Class will be looking for.

All teams should be aware that marks will be awarded for:

- Selecting (and justifying the selection) of a set of experiments to measure the laser wavelength;
- Undertaking these experiments well enough that quantitative results are obtained, and critically evaluated. The more precisely these measurements constrain the laser wavelength the better.
- Analysing these data as critically and quantitatively as possible.

Conclusions that are not precise (or accurate) will probably receive very low scores.

The apparatus with which you are provided is relatively rudimentary, but you should aim to utilise it in the best way to secure an accurate and precise result. You will presumably wish to quote a result in terms of SI units of length, so you should pay attention to how the measurements you make can be related back to the SI standard. As a general rule for approaching

a physical measurement, you should regard any part of the measurement system as a source of systematic error unless you take measures to control this.

A good way to eliminate systematic errors is by comparing your measurement system to a suitable standard of known accuracy. For example, the tape measures in the lab are certified for the EC Class II standard (for more information, see for example: https://en.wikipedia.org/wiki/Tape_measure)

The items available include a fibre-coupled laser of unknown wavelength, an "aperture plate" comprising a metal-coated glass substrate with various opaque or transparent shapes etched into it, an optical rail, and various lenses, mirrors, mounts, apertures and rulers. These can be used to project or image the beams diffracted by the aperture plate (or the apertures themselves) onto a translucent screen.

The optics provided will allow both Fraunhofer and Fresnel patterns to be observed. The laser on your bench has a beam width of 1-2 mm. The apertures etched onto the aperture plate will need to be measured precisely, but you may assume that the basic shapes, e.g. rectangles, circles, triangles, are geometrically correct, and have been oriented precisely with respect to each other. For example, multiple configurations of slits may be assumed to be accurately parallel at the micron level.

3 Hints

Some hints that may assist you in the course of your investigation are given below:

1. Before performing any measurements, you should examine the diffraction patterns briefly for a good selection of the apertures in both the Fraunhofer and Fresnel regimes. You should not spend too much time on this preliminary inspection, but it should inform you what sort of things to expect and help you ensure that the apparatus is set up appropriately for the measurements you eventually choose to make.

2. If you wish to observe Fresnel diffraction patterns, these will generally be small. It is best to use a lens to project (and hence magnify) these diffraction patterns onto a distant screen. You can use standard formulae for the distances to and from the conjugate planes of the lens and for the image magnification. You may wish to note that if a lens is used to project a sharp image of a diffracting aperture onto a distant screen, then if the lens is subsequently moved a known small distance z away from the aperture, the image seen on the screen will be that of the diffraction pattern formed at a distance $\simeq z$ in front of the aperture.

3. Once you have started to consider the experiments, you may wish to undertake, you should spend some time deciding how to minimise your measurement errors and how best to analyse and present your results. For example, suitably chosen graphs can be a powerful way of interpreting your data.

4. You will probably need to measure the sizes of the diffraction apertures in the aperture plates. There is a monocular microscope with digital position readout in the class; if you require instruction in the use of these, approach the Head of Class. Measurement should be made carefully, but because of demand, access to the microscopes may be restricted. You should therefore plan to measure only those apertures you need to, and must schedule your measurements. The measuring microscope has an optical resolution of a few μm, and random error of the positioning readout is somewhat better than this.

Because you will not be provided with facilities for measuring the intensities of the diffraction patterns, you will probably need to focus solely on the spatial information in the patterns observed.

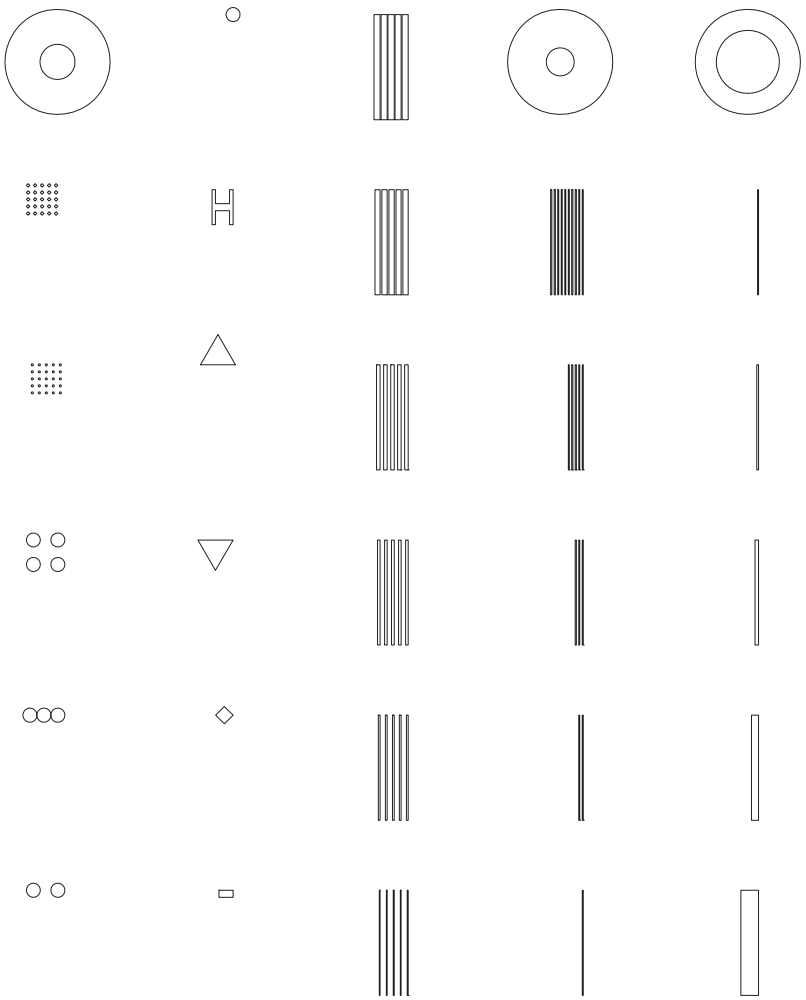

Figure 1: The layout of the apertures in the aperture plate provided at each bench. In this representation, the boundaries between opaque and transparent regions are denoted by thin lines. The dimensions of the apertures you chose to use in your experiments will need to be measured individually. Note that in the middle column, every pattern corresponds to a set of five identical slits, with the individual slit-width increasing from top to bottom.

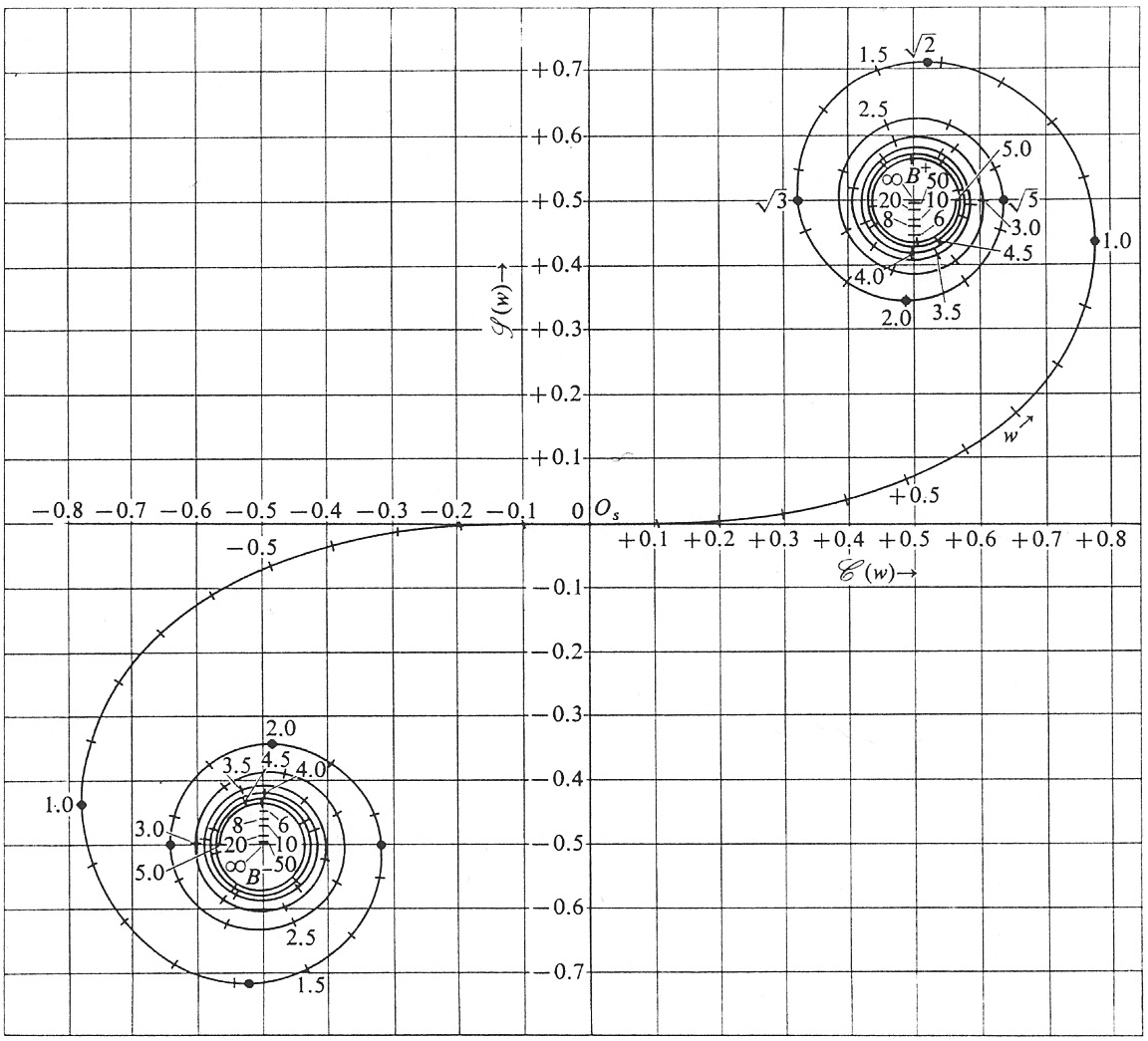

Figure 2: The Cornu spiral (from Hecht, *Optics*, 4th edition). You will need to use this amplitude-phase diagram to interpret results from rectangular and straight-edged apertures and obstacles in the Fresnel regime. The w coordinate along the spiral is related to the transverse distance in the aperture plane, x, the wavelength, λ, and the source-aperture and aperture-observer distances, r_a and r_b, by: $w = x\sqrt{\frac{2}{\lambda R}}$, where $\frac{1}{R} = \frac{1}{r_a} + \frac{1}{r_b}$.

Errors — summary and key results

- The mean of n measurements is given by

$$\bar{x} = \frac{1}{n}\sum_{i=1}^{n} x_i = \frac{1}{n}(x_1 + x_2 + \cdots + x_n).$$

- Best estimate of the random error σ in a *single* measurement is given by

$$\begin{aligned}\sigma^2 &\approx \frac{1}{n-1}\sum_{i=1}^{n}(x_i - \bar{x})^2 \\ &= \frac{1}{n-1}\left[(x_1-\bar{x})^2 + (x_2-\bar{x})^2 + \cdots + (x_n-\bar{x})^2\right].\end{aligned}$$

- The standard error in the mean of n measurements is given by

$$\sigma_{\mathrm{m}} = \frac{\sigma}{\sqrt{n}}.$$

- If Z is a function of the directly measured *independent* quantities A, B, C etc. the general formula for the error in Z is

$$\sigma_Z^2 = \left(\frac{\partial Z}{\partial A}\sigma_A\right)^2 + \left(\frac{\partial Z}{\partial B}\sigma_B\right)^2 + \ldots$$

- If $Z = A + B$ or $A - B$, then

$$(\sigma_Z)^2 = (\sigma_A)^2 + (\sigma_B)^2.$$

- If $Z = A \times B$ or A/B, then

$$\left(\frac{\sigma_Z}{Z}\right)^2 = \left(\frac{\sigma_A}{A}\right)^2 + \left(\frac{\sigma_B}{B}\right)^2.$$

- If $Z = A^m$, then

$$\left(\frac{\sigma_Z}{Z}\right)^2 = \left(\frac{m\sigma_A}{A}\right)^2.$$

  For example, if $Z = A^2 = A \cdot A$, then

$$\left(\frac{\sigma_Z}{Z}\right)^2 = \left(\frac{2\sigma_A}{A}\right)^2.$$

- If $Z = \ln(A)$, then

$$\sigma_Z^2 = \left(\frac{\sigma_A}{A}\right)^2.$$