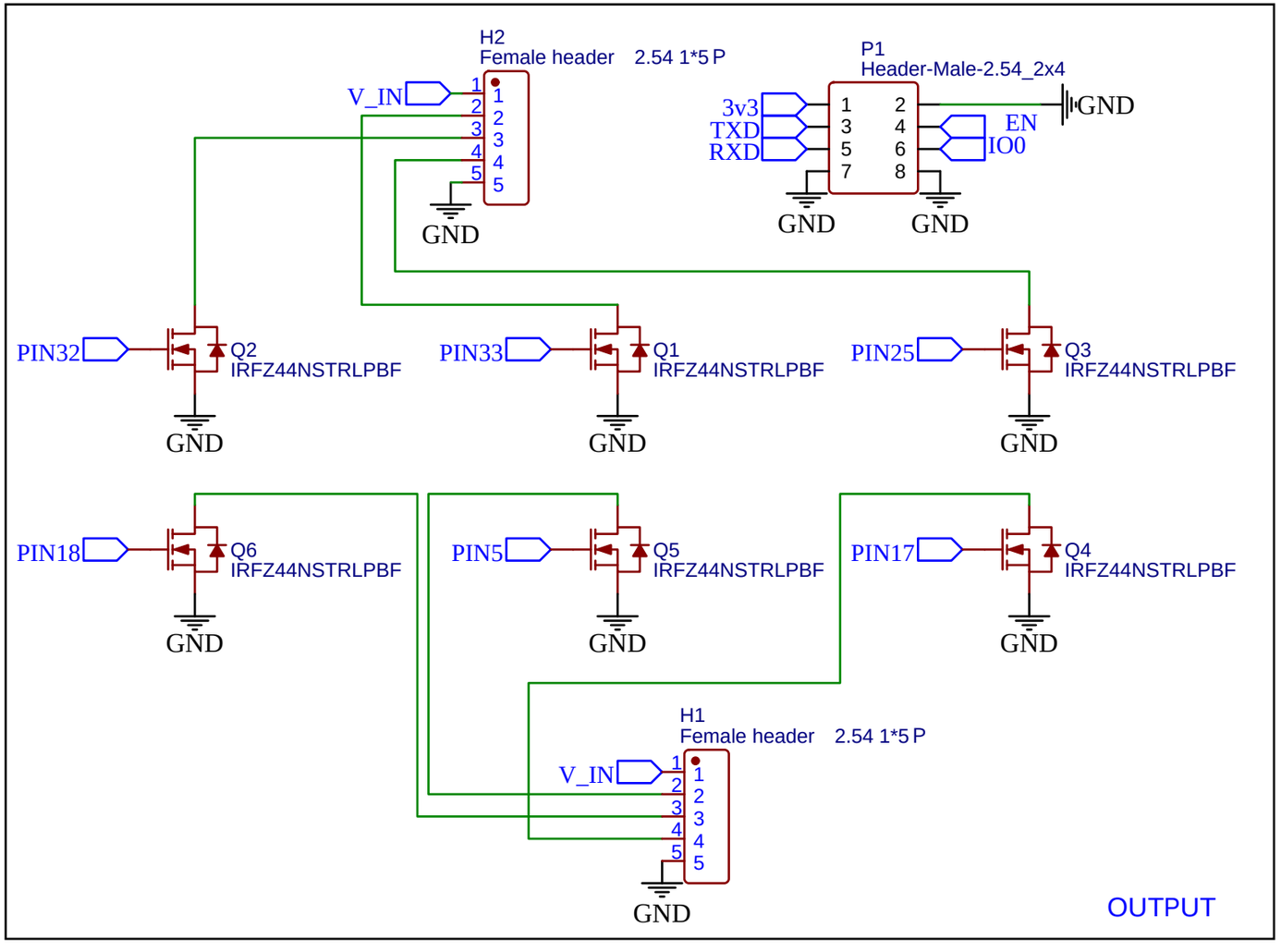

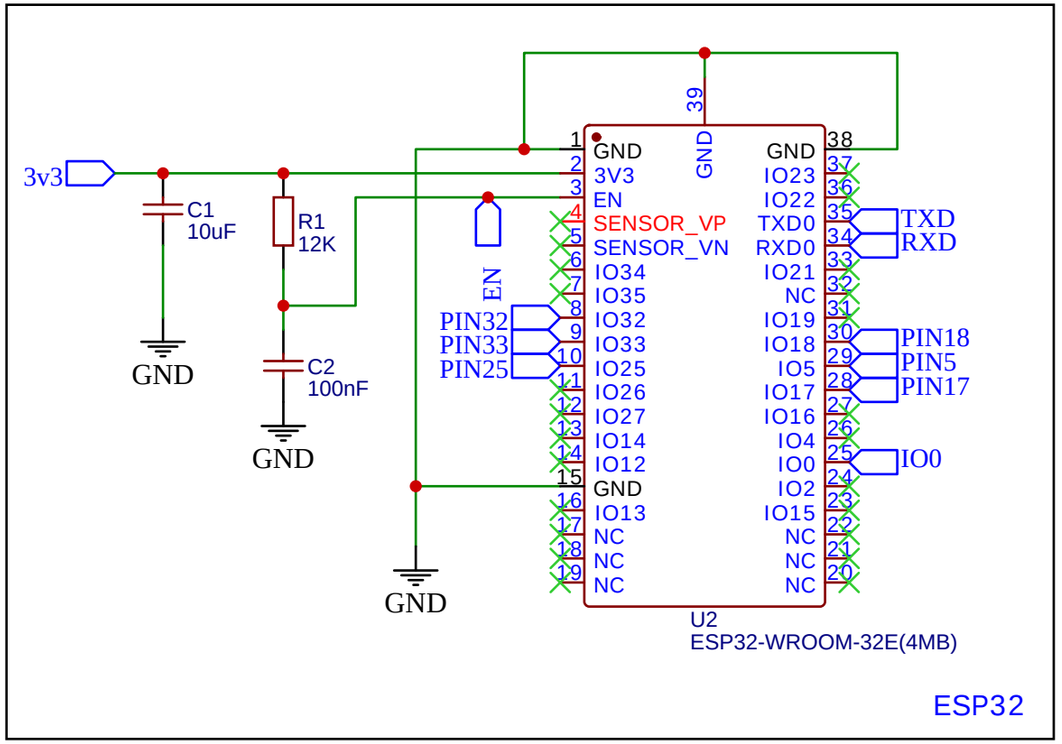

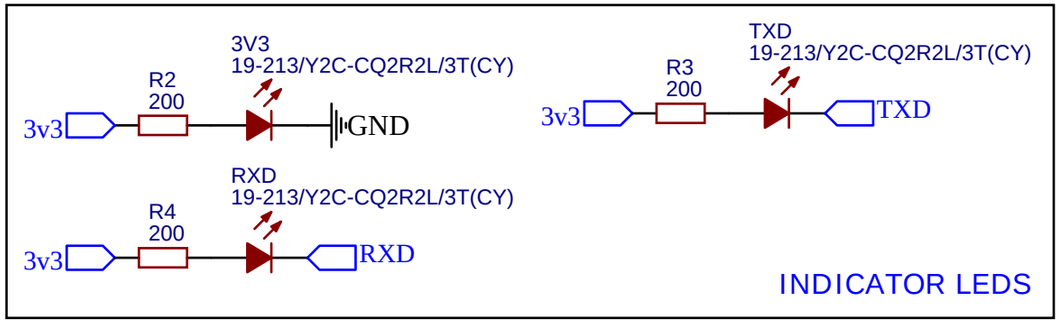

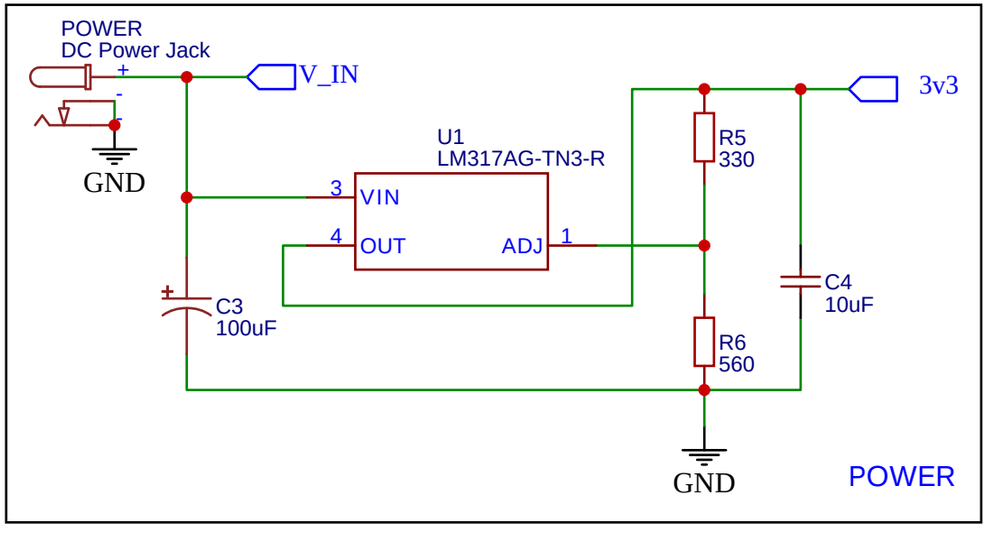

TITLE: ESP32 5050 LED STRIP CONTROLLER		REV: 1.0
	Company:	Sheet: 1/1
	Date: 2020-12-20 Drawn By: Hassan F	