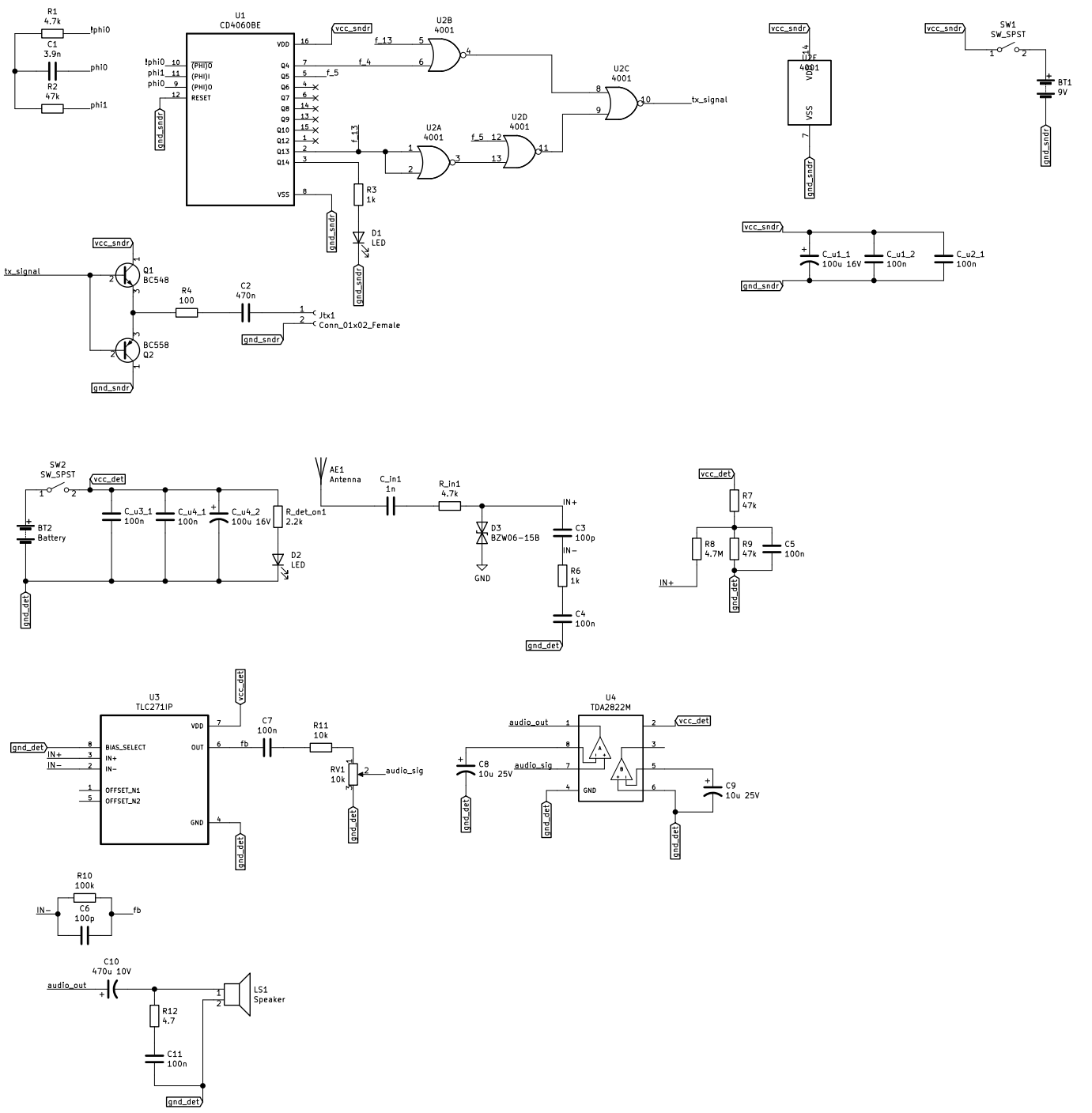

Sheet: /
File: find-wire.sch

Title:

Size: A3	Date:	Rev:
KiCad E.D.A. kicad 5.1.12-1.fc34		Id: 1/1