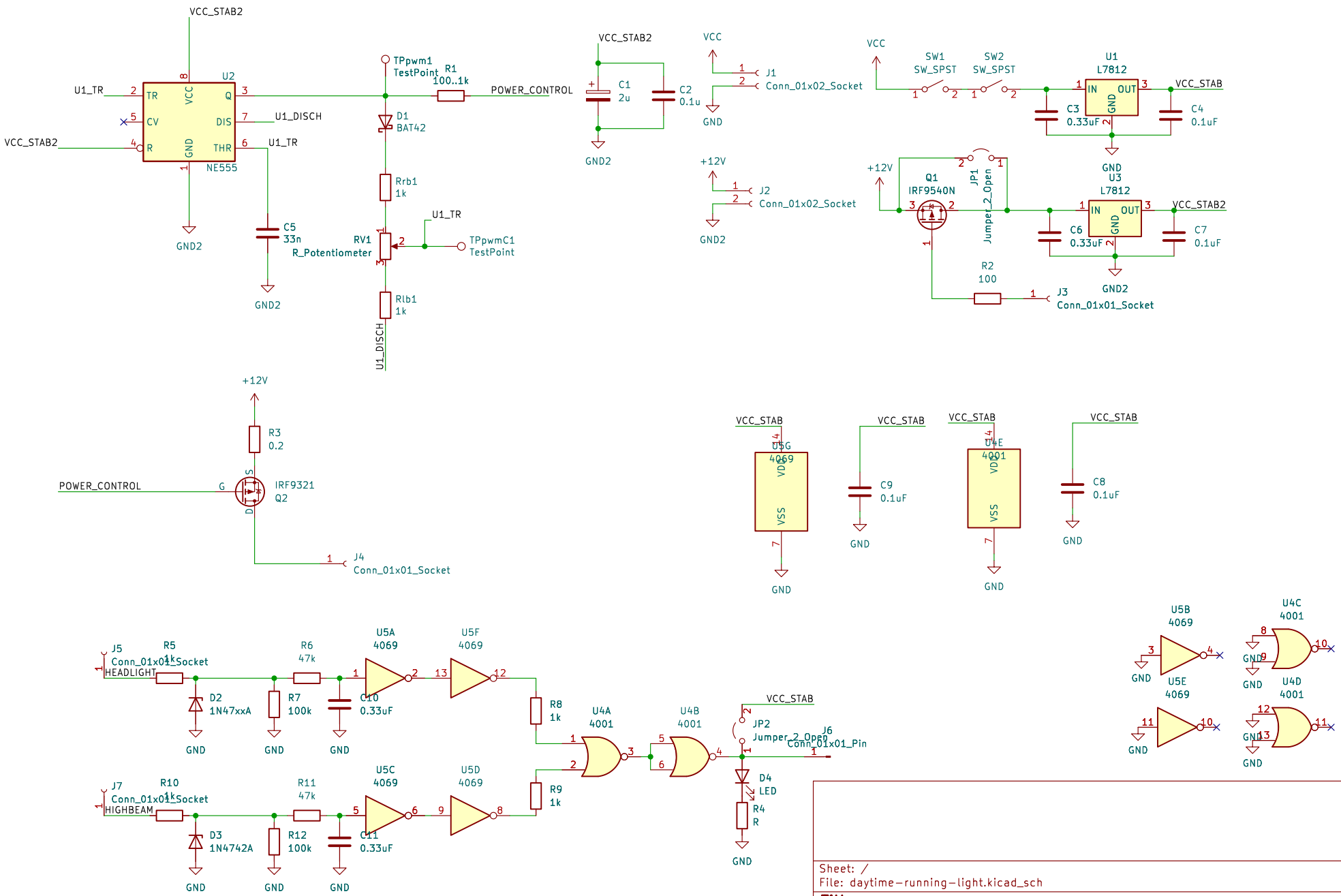

Sheet: /
File: daytime-running-light.kicad_sch

Title:

Size: A4	Date:	Rev:
KiCad E.D.A. kicad 7.0.6-1.fc38		Id: 1/1