STATION OPERATION LEVEL		
RISIING LEVEL CYCLE		
WATER LEVEL ELEVATION	ACTION	PUMPS IN OPERATION
	LEAD PUMP TURNS "ON", FS-2	LEAD PUMP "ON"
	LAG PUMP TURNS "ON", FS-3	LEAD & LAG PUMPS "ON"
	PUMPS "OFF" LEVEL, FS-4	PUMPS "OFF" GRAVITY FLOW
	HIGH WATER IN DITCH, FS-4	ALL PUMPS "OFF"
FALLING LEVEL CYCLE		
	PUMPS "ON" LEVEL, FS-4	PUMPS "ON" PUMPED DISCHARGE
	DITCH FLOAT HIGH WATER. FS-5	ALL PUMPS "ON"
	PUMPS "OFF" LEVEL, FS-1	ALL PUMPS "OFF" LAG PUMP SWITCHES TO LEAD PUMP

TOP VIEW

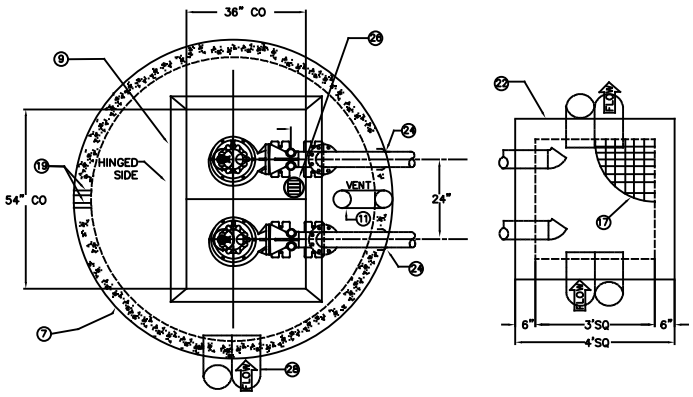

SIDE VIEW

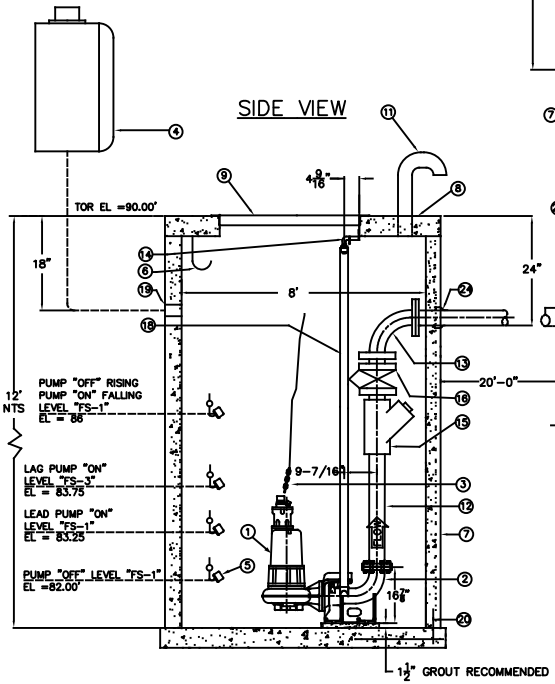

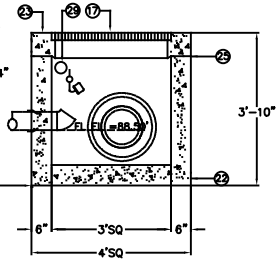

HIGH WATER "ALARM" LEVEL "FS-5"
EL = 89'

ELEVATIONS OF FLOAT SWITCHES TO BE DETERMINED BY THE ENGINEER.

KEYED NOTES		
MARK	QTY	DESCRIPTION
1	2	LIBERTY PUMP M/N LE41M-2
2	2	2" BASE ELBOWS
3	2	STAINLESS STEEL LIFTING CHAIN
4	1	DUPLEX CONTROL PANEL NEMA 4X (MOUNTED & WIRED BY CONTRACTOR)
5	4	FLOAT SWITCH
6	1	SS FLOAT HANGER
7	1	48" DIA x 12' DEEP CONCRETE WET WELL
8	1	6" THK FLAT CONCRETE TOP
9	1	30"x36" SINGLE LEAF ALUMINIUM HATCHWAY (300 PSF)
11	1	4" GALVANIZED VENT
12	2	2" SCH 80 PVC PIPE
13	2	2" SCH 80 PVC 90° ELBOW
14	2	SS UPPER GUIDE BRACKETS
15		BALL CHECK VALVE
16		TRUE UNION BALL VALVE
17	2	36" SQ GALV STEEL BAR GRATE
18	4	SS GUIDE RAILS
19	2	3" CONDUIT
20	-	REBAR AS REQ'D
22	1	36" x 36" x 3'-6" DEEP PRECAST CONCRETE DISCHARGE STRUCTURE
23	1	6" THK DISCHARGE STRUCTURE LID
24	2	RESILIENT RUBBER BOOT
25	-	ALL JOINTS MADE WATER-TIGHT w/ PLASTIC FLEXIBLE GASKET (RAM-NEX)
26	1	NAMEPLATE INDICATING: MFG: SMITHPUMP 254-776-0377 WWW.SMITHPUMP.COM MODEL: LE41M-2 DATE MANUFACTURED
27	1	REMOTE MOUNT DITCH FLOAT (MOUNTED & WIRED BY OTHERS)
28	1	STORM INLET PIPING SEAL w/ NON-SHRINK GROUT (BY OTHERS)
29	1	2" ELECTRICAL COUPLING

SPECIFICATIONS

ALUMINIUM HATCH:
300 PSF RATED, 1/4" ALUMINIUM SKID-RESISTANT FLOOR PLATE, STAINLESS STEEL TAMPERPROOF BOLTING & HINGES & SLAMLOCK.

PUMPS:
PUMPS SHALL BE CENTRIFUGAL SOLIDS HANDLING TYPE WITH SUBMERSIBLE TYPE MOTOR. PUMPS SHALL HAVE A CAPACITY AS FOLLOWS:

Pump No.	Type	GPM	TDH	RPM	Electrical HP	V	PH	Hz
P-1	NON CLOG							60
P-2	NON CLOG							60

CONTROLS:
PUMP CONTROLS SHALL BE MOUNTED INSIDE A UL LISTED NEMA-4X ENCLOSURE AND INCLUDE CIRCUIT BREAKERS, ALARM CIRCUIT FUSE, IEC RATED MOTOR STARTER, PUMP HOA, AND ALTERNATOR RELAY. PANEL SHALL HAVE A VISUAL ALARM BEACON, PANEL IS DESIGNED FOR REMOTE MOUNTING.

COMPANY CONFIDENTIAL: INFORMATION CONTAINED HEREIN IS CONFIDENTIAL. IT IS THE PROPERTY OF SMITH PUMP CO. IT IS TO BE USED SOLELY FOR THE PURPOSES PROVIDED, AND IT IS NOT TO BE DISCLOSED TO OTHERS WITHOUT THE PRIOR WRITTEN CONSENT OF SMITH PUMP COMPANY.

REV.	DATE	DESCRIPTION

SMITH PUMP COMPANY

PRODUCT: Duplex Lift Station				
PROJECT				
OWNER				
CONTRACTOR				
ENG.				
DWG. NO.				
DATE	SCALE NONE	BY JTM	CK JSM	REV —