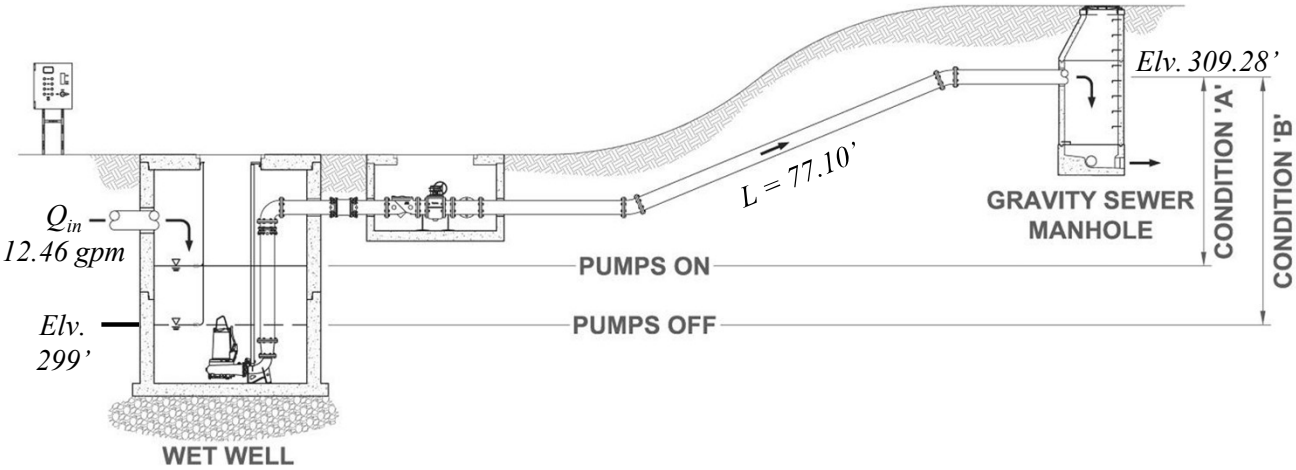
Elv. 309.28'
CONDITION 'A'
CONDITION 'B'
L = 77.10'
GRAVITY SEWER MANHOLE
Q_{in}
12.46 gpm
PUMPS ON
Elv. 299'
PUMPS OFF
WET WELL

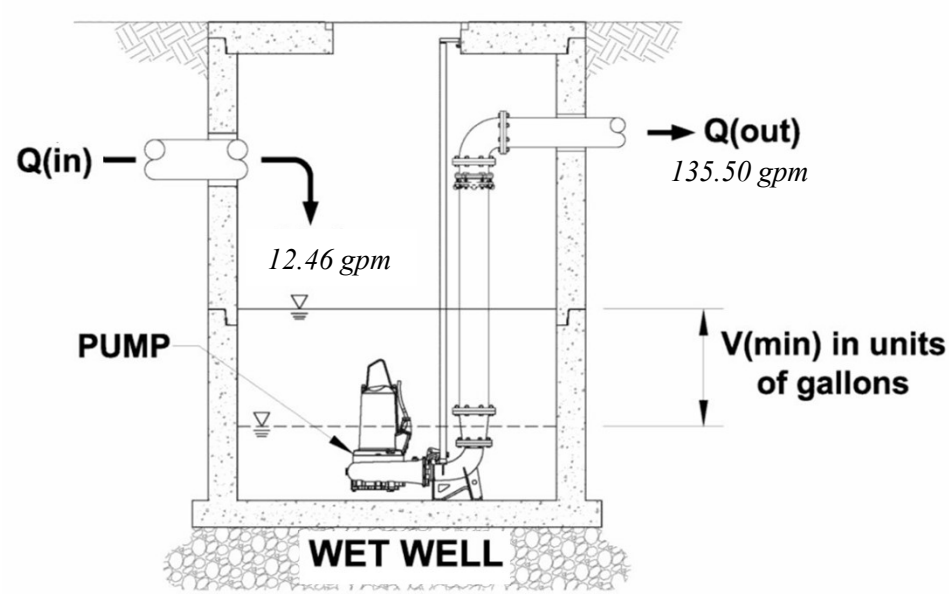
Q(in)
Q(out)
135.50 gpm
12.46 gpm
PUMP
V(min) in units of gallons
WET WELL

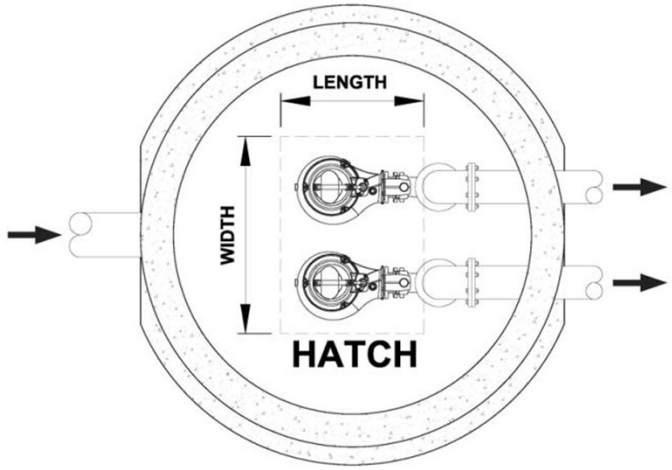
LENGTH
WIDTH
HATCH

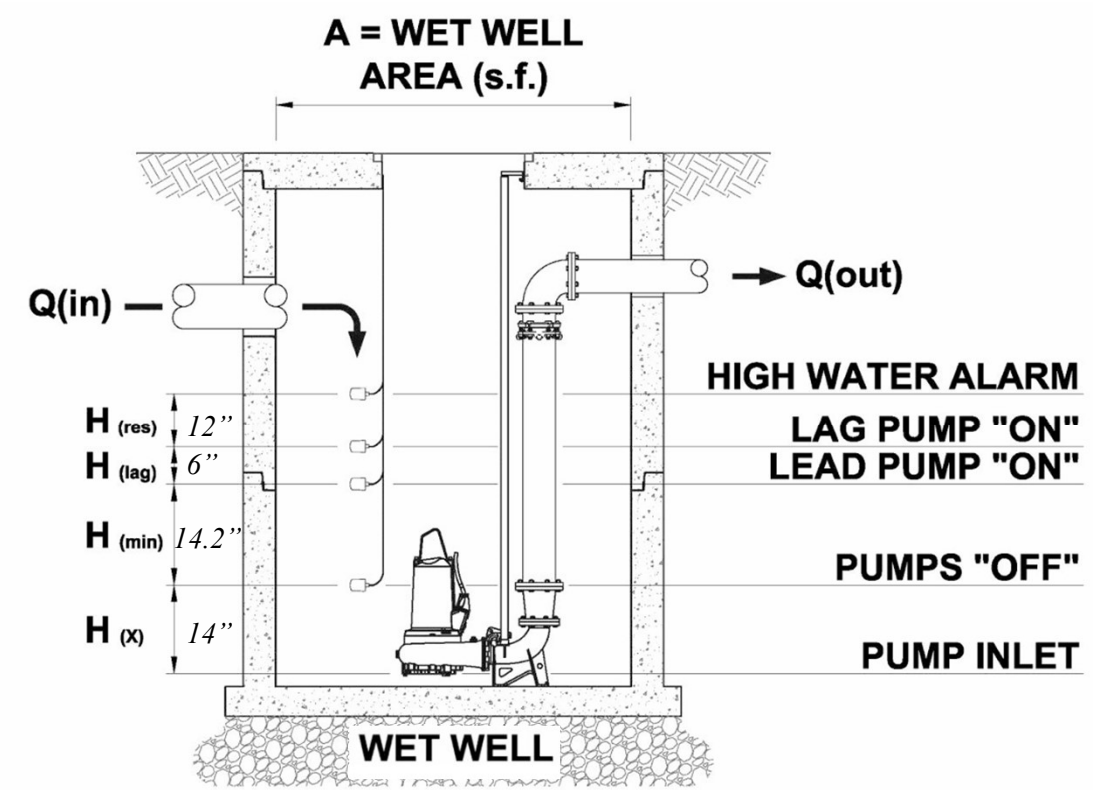
A = WET WELL
AREA (s.f.)
Q(in)
Q(out)
HIGH WATER ALARM
H (res)
12”
LAG PUMP "ON"
H (lag)
6”
LEAD PUMP "ON"
H (min)
14.2”
PUMPS "OFF"
H (X)
14”
PUMP INLET
WET WELL