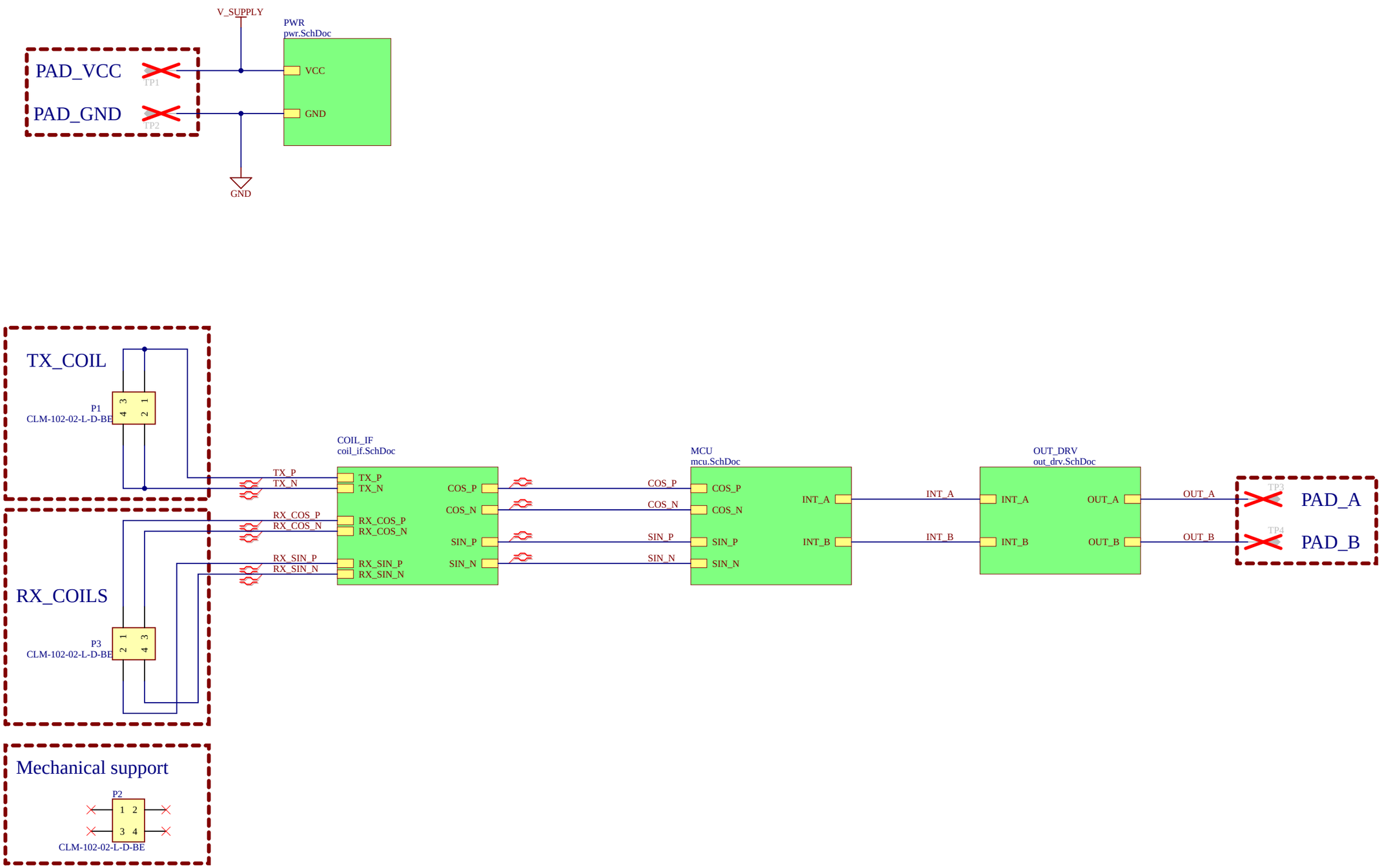

Proj	Title: logic_board.PrjPcb__Base	Approved:
Sheet	File Name: main.SchDoc	PMP THE APPLICATION SPECIALIST
	Author: [Sheet Author]	
	Rev: 0 / Date: 03/08/2026	
	Size: A3 / Number: 1 of 5	

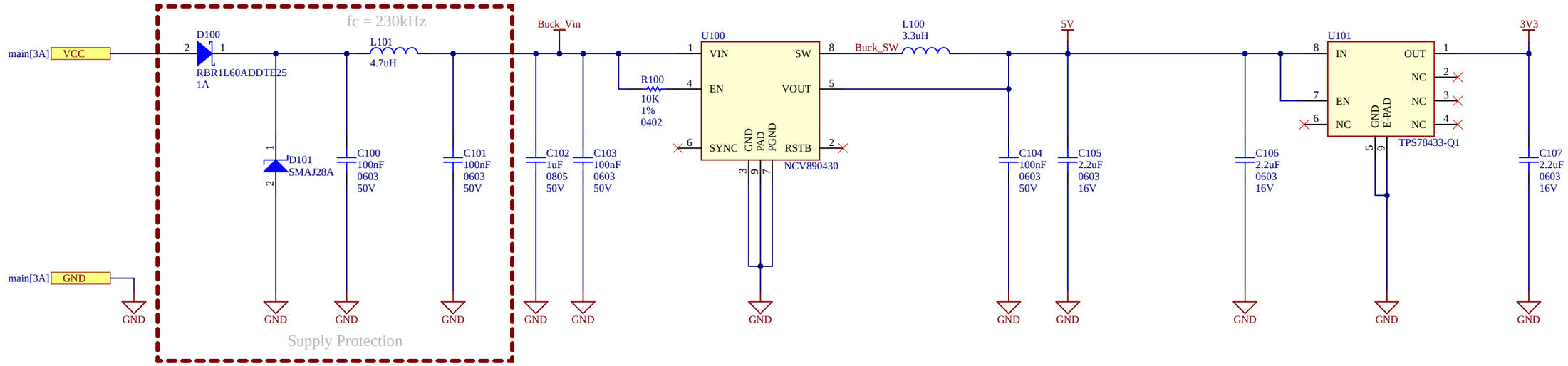

Proj	Title: logic_board.PrjPcb__Base	Approved:
Sheet	File Name: pwr.SchDoc	
	Author: [Sheet Author]	
	Rev: 0 / Date: [Sheet Date]	
	Size: A3 / Number: 2 of 5	

THE APPLICATION SPECIALIST

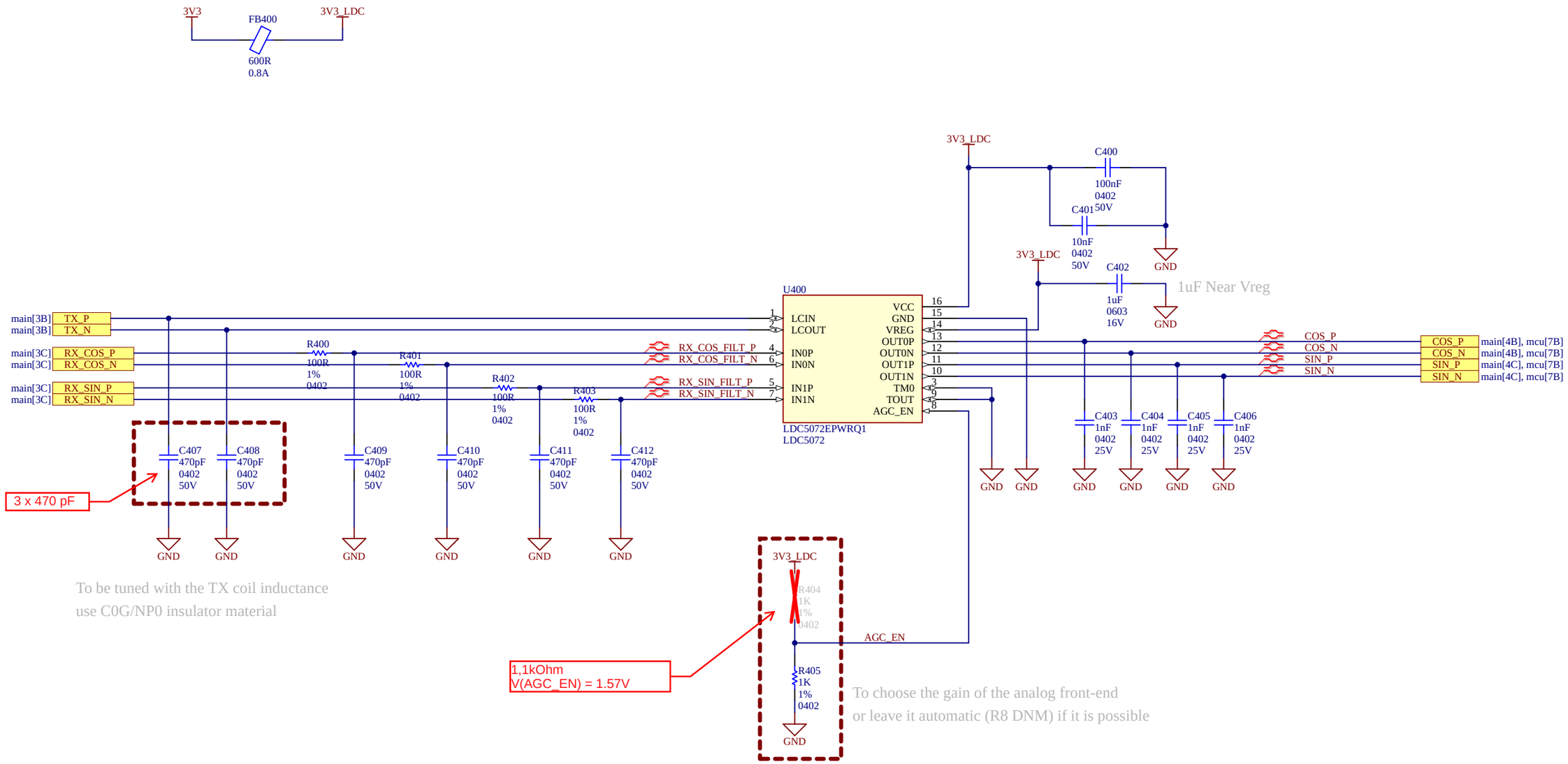

Proj	Title: logic_board.PrjPcb__Base	Approved:
Sheet	File Name: coil_if.SchDoc	PMP THE APPLICATION SPECIALIST
	Author: [Sheet Author]	
	Rev: 0 / Date: [Sheet Date]	
	Size: A3 / Number: 3 of 5	

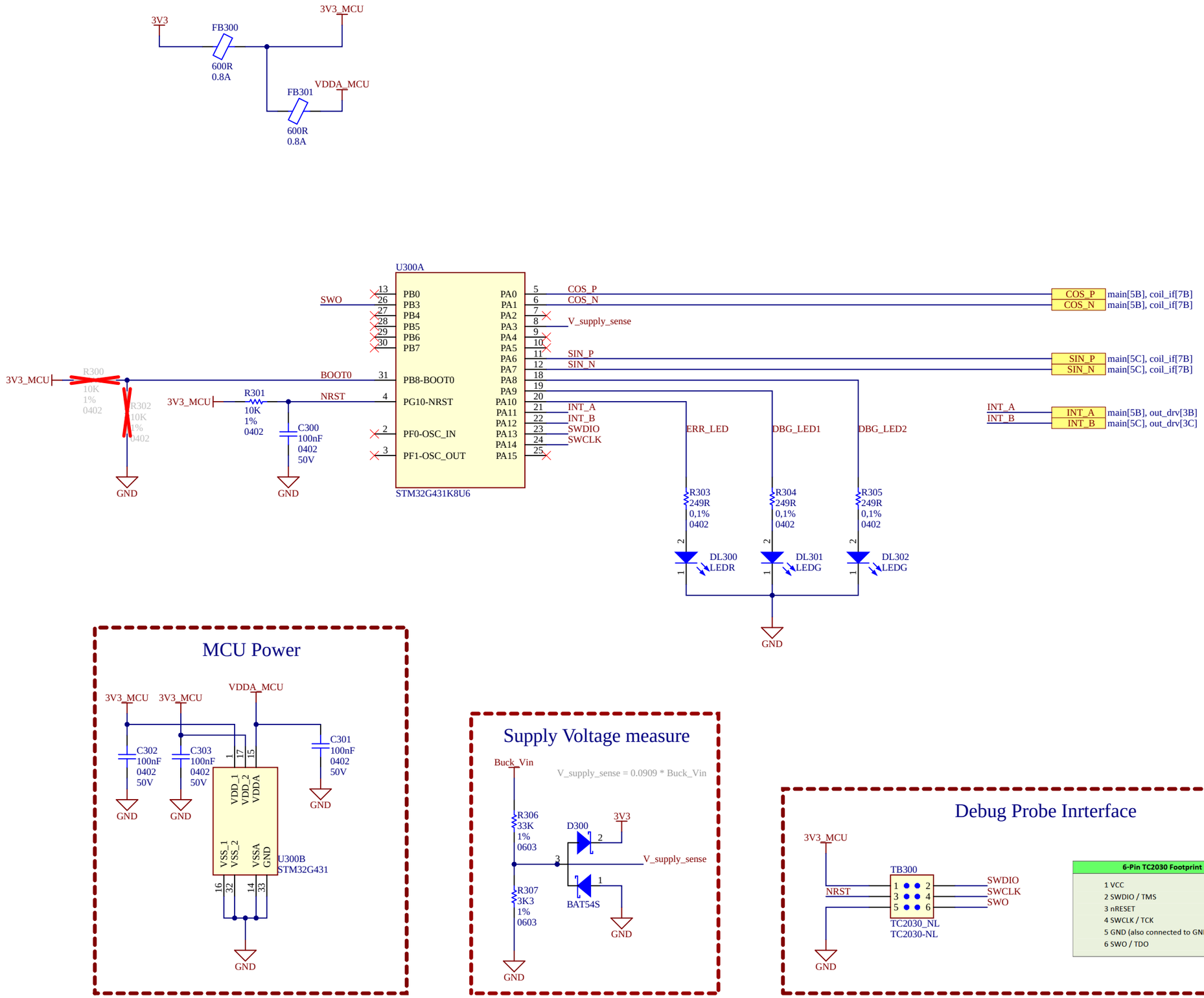

Proj	Title: logic_board.PrjPcb__Base	Approved:
Sheet	File Name: mcu.SchDoc	
	Author: [Sheet Author]	
	Rev: 0 / Date: [Sheet Date]	
	Size: A3 / Number: 4 of 5	

PMP
THE APPLICATION SPECIALIST

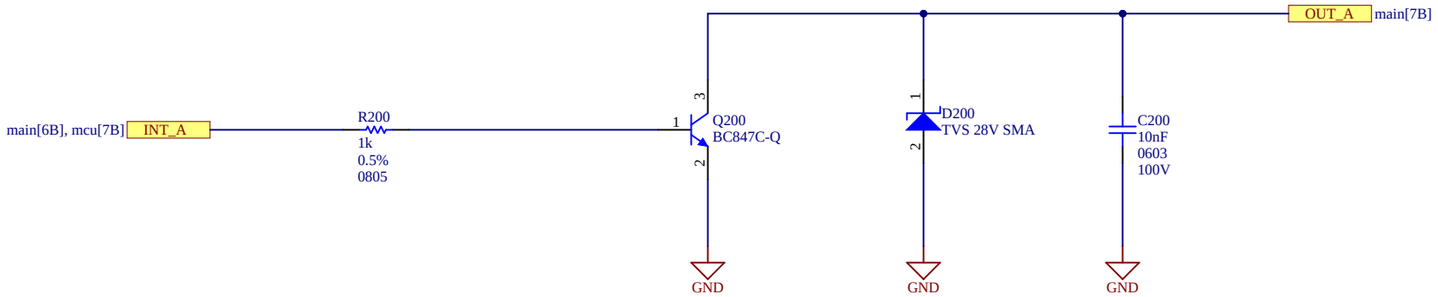

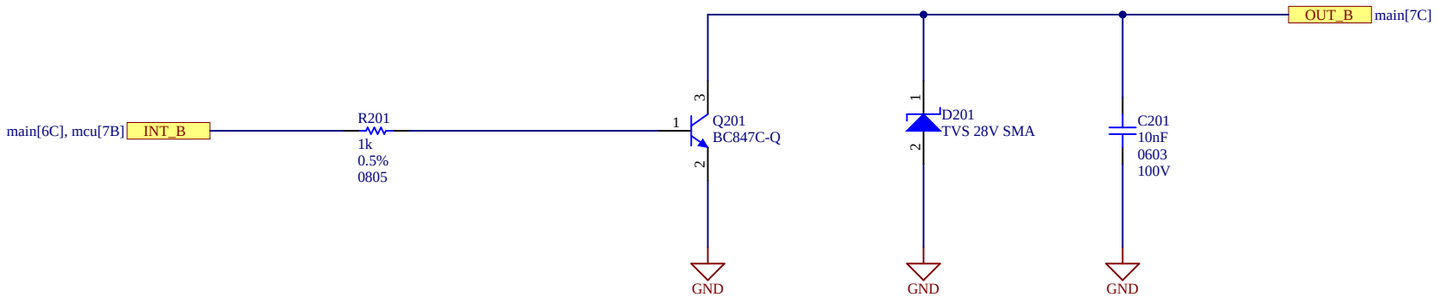

Proj	Title: logic_board.PrjPcb__Base	Approved:
Sheet	File Name: out_drv.SchDoc	
	Author: [Sheet Author]	
	Rev: 0 / Date: [Sheet Date]	
	Size: A3 / Number: 5 of 5	

THE APPLICATION SPECIALIST