DIB isolators, EEPROM, ADC, MCU

File: DIB_EEPROM_ADC_MCU.kicad_sch

DAC, OE, Vref, IOEXP, Temp

File: DAC_Vref_IOEXP_Temp.kicad_sch

Power pre-regulator

File: Power_pre-regulator.kicad_sch

Bias power

File: Bias_power.kicad_sch

Post-regulator

File: Post-regulator.kicad_sch

Rsense protection, power output, Rprog

File: Rsense_protection_power_output.kicad_sch

Mode detection, OVP

File: CC_CV_OVP.kicad_sch

KK1
PCB-MB-01

KK2
PCB-MB-01

https://www.envox.eu
Power module with SMPS pre-regulator, remote sense & programming
Licensed under the TAPR Open Hardware License (www.tapr.org/OHL)
Envox d.o.o.

Sheet: /
File: EEZ DIB DCP405plus.kicad_sch

Title: EEZ DIB DCP405+ power module

Size: A4	Date: 2025-12-18	**Rev: r4B4**
KiCad E.D.A. 9.0.6		Id: 1/8

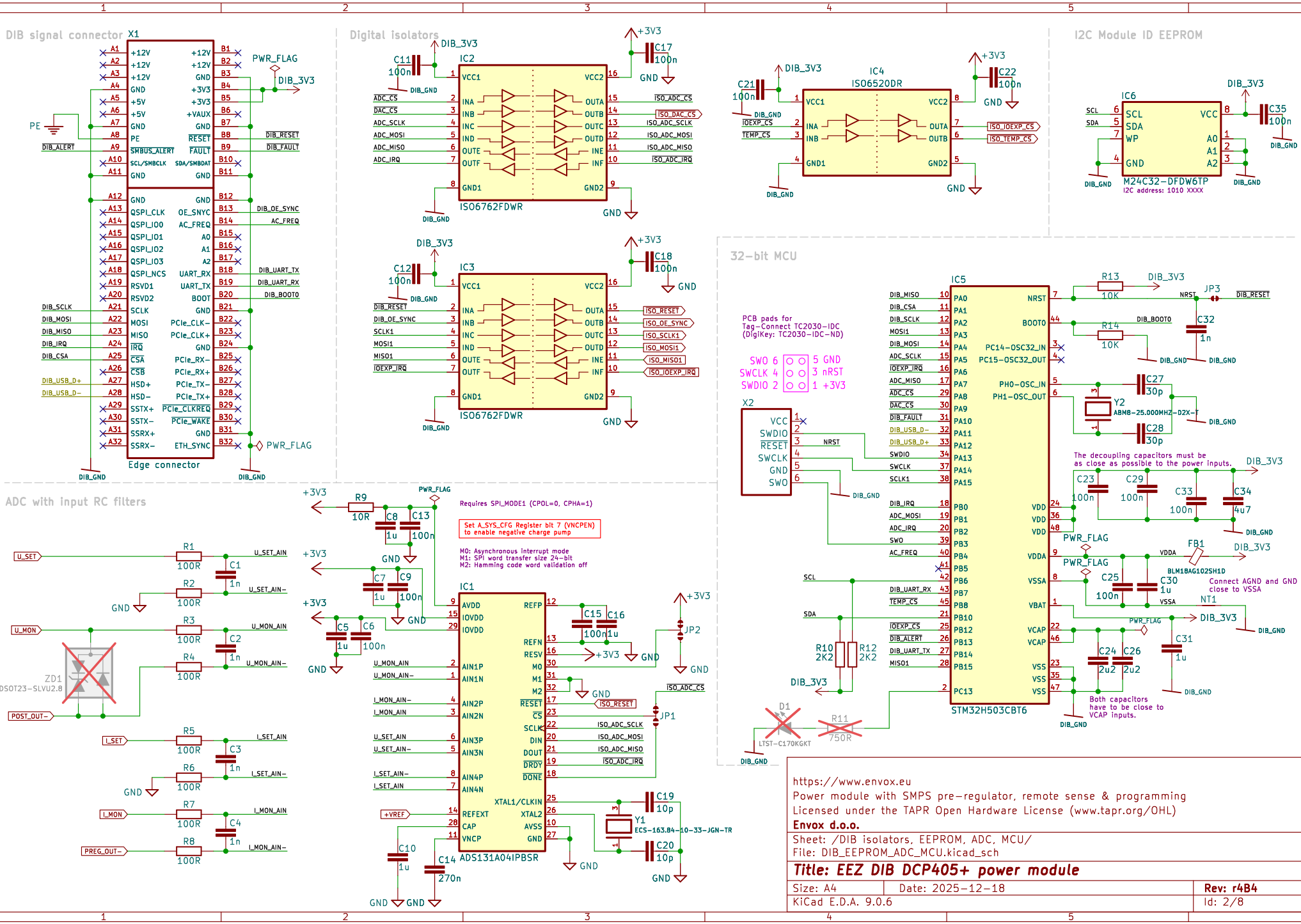
DIB signal connector X1
Edge connector
PWR_FLAG
DIB_3V3
PE
DIB_ALERT
DIB_SCLK
DIB_MOSI
DIB_MISO
DIB_IRQ
DIB_CSA
DIB_USB_D+
DIB_USB_D-
DIB_RESET
DIB_FAULT
DIB_OE_SYNC
AC_FREQ
DIB_UART_TX
DIB_UART_RX
DIB_BOOT0
DIB_GND
Digital isolators
IC2
ISO6762FDWR
IC3
ISO6762FDWR
C11 100n
C12 100n
C17 100n
C18 100n
ADC_CS
DAC_CS
ADC_SCLK
ADC_MOSI
ADC_MISO
ADC_IRQ
ISO_ADC_CS
ISO_DAC_CS
ISO_ADC_SCLK
ISO_ADC_MOSI
ISO_ADC_MISO
ISO_ADC_IRQ
ISO_RESET
ISO_OE_SYNC
ISO_SCLK1
ISO_MOSI1
ISO_MISO1
ISO_IOEXP_IRQ
IC4
ISO6520DR
C21 100n
C22 100n
IOEXP_CS
TEMP_CS
ISO_IOEXP_CS
ISO_TEMP_CS
I2C Module ID EEPROM
IC6
M24C32-DFDW6TP
I2C address: 1010 XXXX
C35 100n
ADC with input RC filters
U_SET
U_MON
I_SET
I_MON
POST_OUT-
PREG_OUT-
R1 100R
R2 100R
R3 100R
R4 100R
R5 100R
R6 100R
R7 100R
R8 100R
C1 1n
C2 1n
C3 1n
C4 1n
ZD1
CDSOT23-SLVU2.8
U_SET_AIN
U_SET_AIN-
U_MON_AIN
U_MON_AIN-
I_SET_AIN
I_SET_AIN-
I_MON_AIN
I_MON_AIN-
IC1
ADS131A04IPBSR
R9 10R
C8 1u
C13 100n
C7 1u
C9 100n
C5 1u
C6 100n
C10 1u
C14 270n
C15 100n
C16 1u
C19 10p
C20 10p
Y1
ECS-163.84-10-33-JGN-TR
+VREF
Requires SPI_MODE1 (CPOL=0, CPHA=1)
Set A_SYS_CFG Register bit 7 (VNCPEN) to enable negative charge pump
M0: Asynchronous interrupt mode
M1: SPI word transfer size 24-bit
M2: Hamming code word validation off
JP1
JP2
32-bit MCU
IC5
STM32H503CBT6
X2
SWO 6
SWCLK 4
SWDIO 2
5 GND
3 nRST
1 +3V3
PCB pads for Tag-Connect TC2030-IDC (DigiKey: TC2030-IDC-ND)
R10 2K2
R12 2K2
R11 750R
D1
LTST-C170KGKT
R13 10K
R14 10K
JP3
C32 1n
C27 30p
C28 30p
Y2
ABM8-25.000MHZ-D2X-T
C23 100n
C29 100n
C33 100n
C34 4u7
C25 100n
C30 1u
C24 2u2
C26 2u2
C31 1u
FB1
BLM18AG102SH1D
The decoupling capacitors must be as close as possible to the power inputs.
Connect AGND and GND close to VSSA
Both capacitors have to be close to VCAP inputs.
https://www.envox.eu
Power module with SMPS pre-regulator, remote sense & programming
Licensed under the TAPR Open Hardware License (www.tapr.org/OHL)
Envox d.o.o.
Sheet: /DIB isolators, EEPROM, ADC, MCU/
File: DIB_EEPROM_ADC_MCU.kicad_sch
Title: EEZ DIB DCP405+ power module
Size: A4
Date: 2025-12-18
Rev: r4B4
KiCad E.D.A. 9.0.6
Id: 2/8

16-bit DAC (set voltage and current)

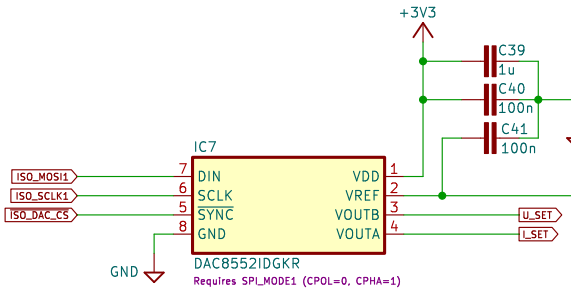

Voltage reference

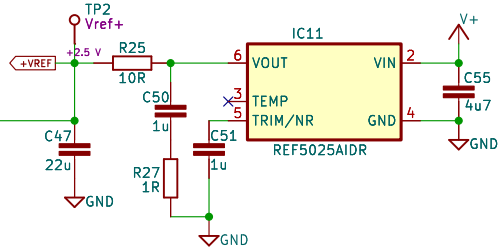

SPI 22-bit I/O Expander

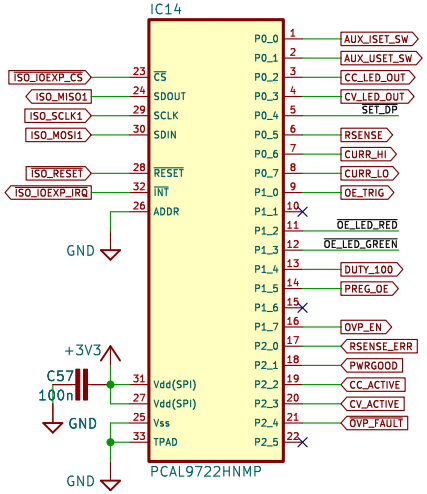

Output enable (OE)

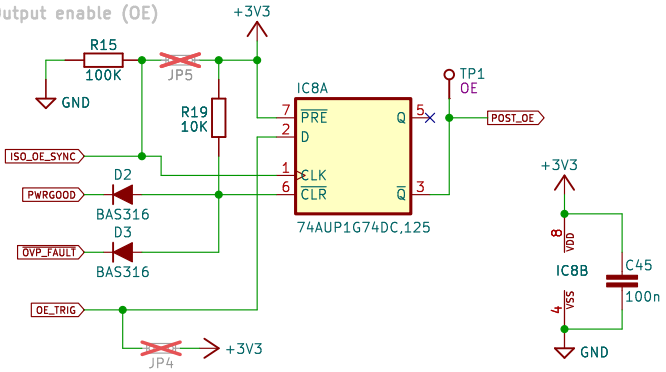

Down-programmer

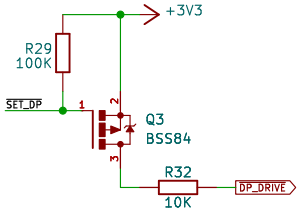

OE indicator

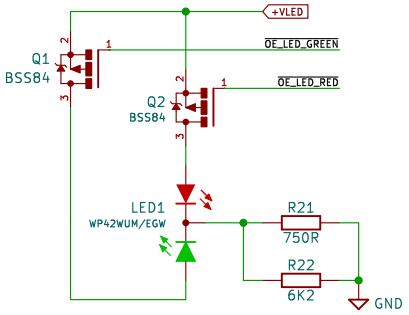

SPI Temperature sensor

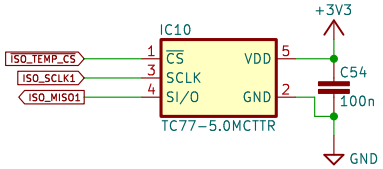

https://www.envox.eu
Power module with SMPS pre-regulator, remote sense & programming
Licensed under the TAPR Open Hardware License (www.tapr.org/OHL)
Envox d.o.o.

Sheet: /DAC, OE, Vref, IOEXP, Temp/
File: DAC_Vref_IOEXP_Temp.kicad_sch

Title: EEZ DIB DCP405+ power module

Size: A4	Date: 2025-12-18	**Rev: r4B4**
KiCad E.D.A. 9.0.6		Id: 3/8

Bias power supply

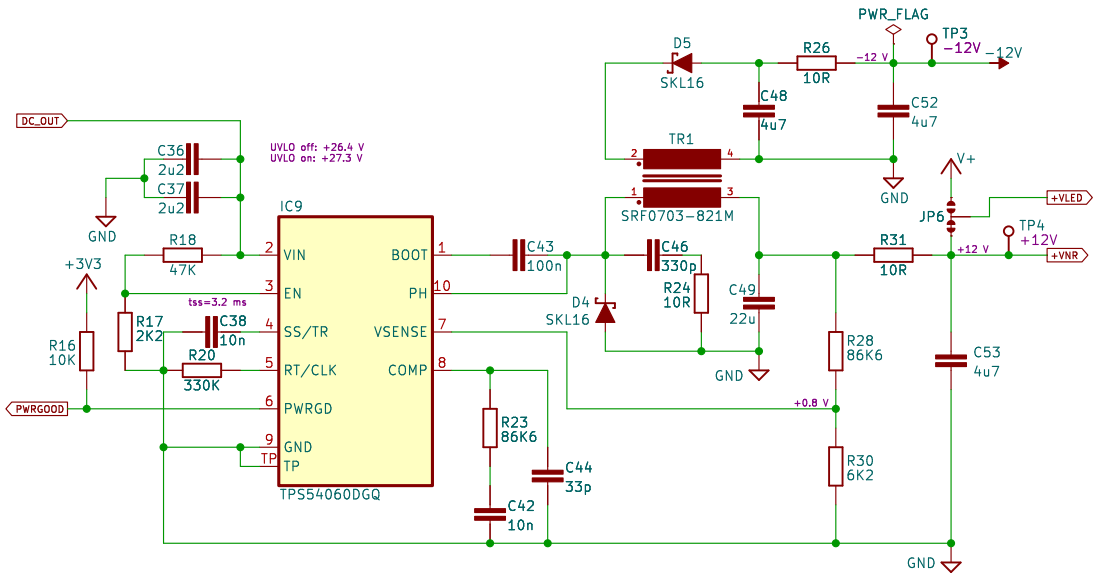

+5V LDO

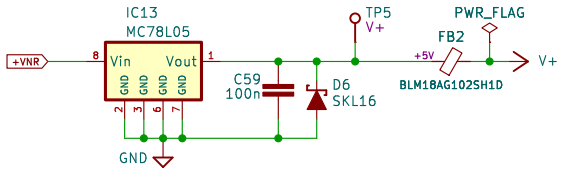

−5V LDO

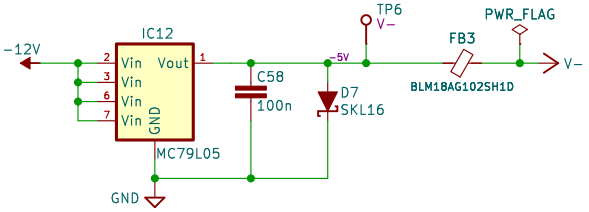

+3V3 LDO

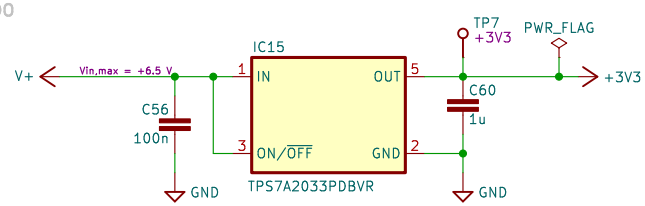

https://www.envox.eu
Power module with SMPS pre-regulator, remote sense & programming
Licensed under the TAPR Open Hardware License (www.tapr.org/OHL)
Envox d.o.o.

Sheet: /Bias power/
File: Bias_power.kicad_sch

Title: EEZ DIB DCP405+ power module

Size: A4	Date: 2025-12-18	**Rev: r4B4**
KiCad E.D.A. 9.0.6		Id: 3/8

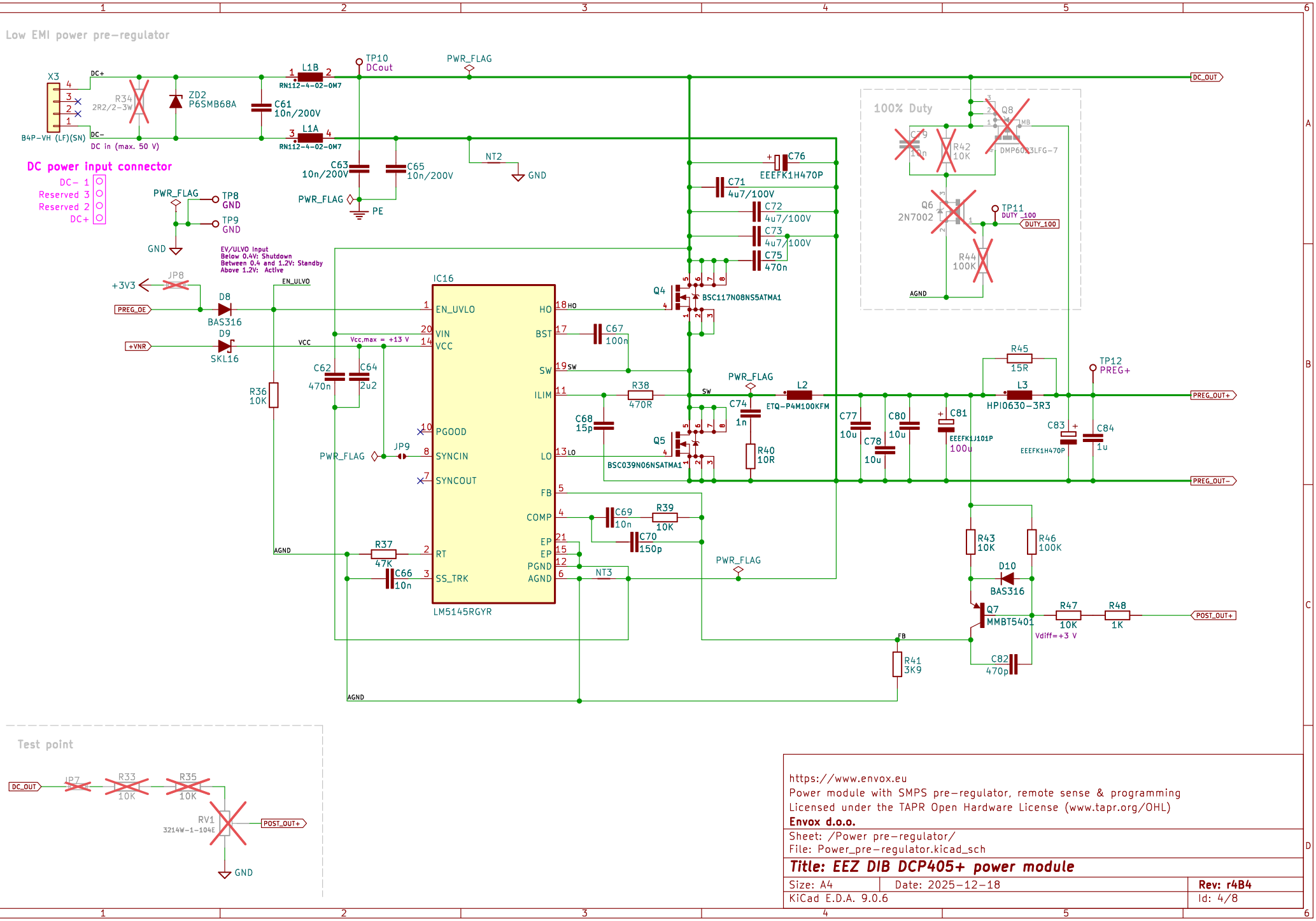
Low EMI power pre-regulator
DC power input connector
DC- 1
Reserved 3
Reserved 2
DC+
B4P-VH (LF)(SN)
DC in (max. 50 V)
X3
R34
2R2/2-3W
ZD2
P6SMB68A
C61
10n/200V
L1B
L1A
RN112-4-02-0M7
TP10
DCout
PWR_FLAG
C63
10n/200V
C65
10n/200V
PE
NT2
GND
TP8
TP9
JP8
+3V3
PREG_OE
D8
BAS316
+VNR
D9
SKL16
EN_UVLO
Vcc,max = +13 V
VCC
C62
470n
C64
2u2
R36
10K
IC16
EN_UVLO
VIN
VCC
PGOOD
SYNCIN
SYNCOUT
RT
SS_TRK
HO
BST
SW
ILIM
LO
FB
COMP
EP
EP
PGND
AGND
LM5145RGYR
C67
100n
R38
470R
C68
15p
JP9
R37
47K
C66
10n
C69
10n
R39
10K
C70
150p
NT3
AGND
Q4
BSC117N08NS5ATMA1
Q5
BSC039N06NSATMA1
C76
EEEFK1H470P
C71
4u7/100V
C72
4u7/100V
C73
4u7/100V
C75
470n
C74
1n
R40
10R
L2
ETQ-P4M100KFM
100% Duty
C79
10n
R42
10K
Q8
DMP6023LFG-7
Q6
2N7002
TP11
DUTY_100
R44
100K
R45
15R
L3
HPI0630-3R3
TP12
PREG+
C77
10u
C78
10u
C80
10u
C81
EEEFK1J101P
100u
C83
EEEFK1H470P
C84
1u
R43
10K
R46
100K
D10
BAS316
Q7
MMBT5401
R47
10K
R48
1K
Vdiff=+3 V
C82
470p
R41
3K9
DC_OUT
PREG_OUT+
PREG_OUT-
POST_OUT+
Test point
JP7
R33
10K
R35
10K
RV1
3214W-1-104E
https://www.envox.eu
Power module with SMPS pre-regulator, remote sense & programming
Licensed under the TAPR Open Hardware License (www.tapr.org/OHL)
Envox d.o.o.
Sheet: /Power pre-regulator/
File: Power_pre-regulator.kicad_sch
Title: EEZ DIB DCP405+ power module
Size: A4
Date: 2025-12-18
Rev: r4B4
KiCad E.D.A. 9.0.6
Id: 4/8

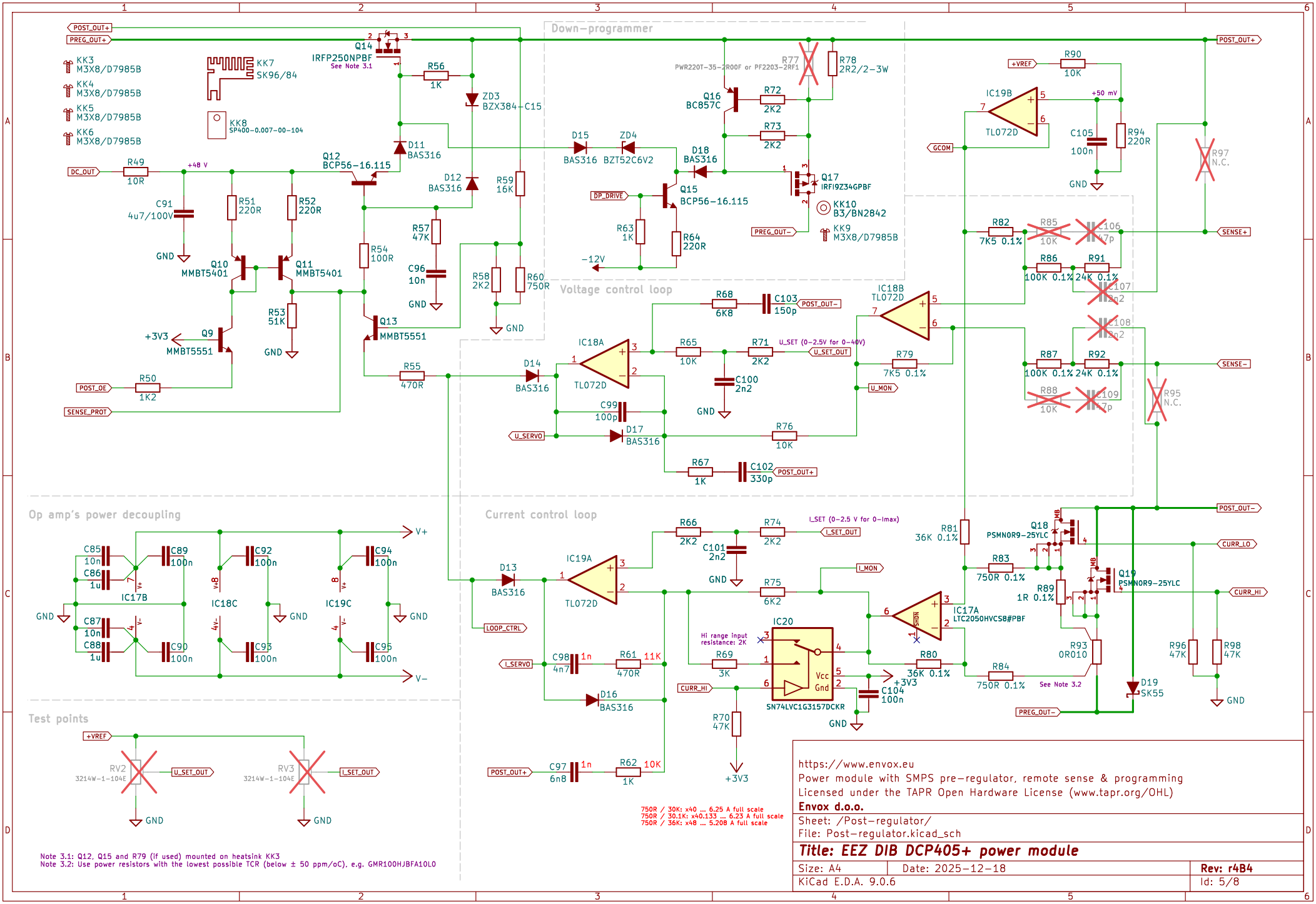
Down-programmer
Voltage control loop
Current control loop
Op amp's power decoupling
Test points
POST_OUT+
PREG_OUT+
KK3 M3X8/D7985B
KK4 M3X8/D7985B
KK5 M3X8/D7985B
KK6 M3X8/D7985B
KK7 SK96/84
KK8 SP400-0.007-00-104
Q14 IRFP250NPBF See Note 3.1
R56 1K
ZD3 BZX384-C15
D11 BAS316
D12 BAS316
Q12 BCP56-16.115
R49 10R
+48 V
DC_OUT
C91 4u7/100V
R51 220R
R52 220R
Q10 MMBT5401
Q11 MMBT5401
R53 51K
Q9 MMBT5551
+3V3
R50 1K2
POST_OE
SENSE_PROT
R54 100R
R57 47K
C96 10n
Q13 MMBT5551
R55 470R
R59 16K
R58 2K2
R60 750R
D15 BAS316
ZD4 BZT52C6V2
D18 BAS316
Q15 BCP56-16.115
DP_DRIVE
R63 1K
R64 220R
-12V
PWR220T-35-2R00F or PF2203-2RF1
R77
R78 2R2/2-3W
Q16 BC857C
R72 2K2
R73 2K2
Q17 IRFI9Z34GPBF
KK10 B3/BN2842
KK9 M3X8/D7985B
PREG_OUT-
+VREF
R90 10K
IC19B TL072D
+50 mV
C105 100n
R94 220R
GCOM
R97 N.C.
SENSE+
R82 7K5 0.1%
R85 10K
C106 47p
R86 100K 0.1%
R91 24K 0.1%
C107 2n2
C108 2n2
R87 100K 0.1%
R92 24K 0.1%
R88 10K
C109 47p
R95 N.C.
SENSE-
IC18B TL072D
R68 6K8
C103 150p
POST_OUT-
IC18A TL072D
R65 10K
R71 2K2
U_SET (0-2.5V for 0-40V)
U_SET_OUT
C100 2n2
R79 7K5 0.1%
U_MON
D14 BAS316
C99 100p
U_SERVO
D17 BAS316
R76 10K
R67 1K
C102 330p
POST_OUT+
C85 10n
C86 1u
C87 10n
C88 1u
C89 100n
C90 100n
C92 100n
C93 100n
C94 100n
C95 100n
IC17B
IC18C
IC19C
V+
V-
GND
R66 2K2
R74 2K2
I_SET (0-2.5 V for 0-Imax)
I_SET_OUT
C101 2n2
D13 BAS316
IC19A TL072D
R75 6K2
I_MON
LOOP_CTRL
I_SERVO
C98 4n7 1n
R61 470R 11K
D16 BAS316
IC20 SN74LVC1G3157DCKR
Hi range input resistance: 2K
R69 3K
CURR_HI
R70 47K
+3V3
C104 100n
IC17A LTC2050HVCS8#PBF
R80 36K 0.1%
R81 36K 0.1%
R83 750R 0.1%
R84 750R 0.1%
See Note 3.2
Q18 PSMN0R9-25YLC
Q19 PSMN0R9-25YLC
R89 1R 0.1%
R93 0R010
D19 SK55
R96 47K
R98 47K
CURR_LO
CURR_HI
POST_OUT-
C97 6n8 1n
R62 1K 10K
750R / 30K: x40 ... 6.25 A full scale
750R / 30.1K: x40.133 ... 6.23 A full scale
750R / 36K: x48 ... 5.208 A full scale
RV2 3214W-1-104E
RV3 3214W-1-104E
U_SET_OUT
I_SET_OUT
Note 3.1: Q12, Q15 and R79 (if used) mounted on heatsink KK3
Note 3.2: Use power resistors with the lowest possible TCR (below ± 50 ppm/oC), e.g. GMR100HJBFA10L0
https://www.envox.eu
Power module with SMPS pre-regulator, remote sense & programming
Licensed under the TAPR Open Hardware License (www.tapr.org/OHL)
Envox d.o.o.
Sheet: /Post-regulator/
File: Post-regulator.kicad_sch
Title: EEZ DIB DCP405+ power module
Size: A4
Date: 2025-12-18
Rev: r4B4
KiCad E.D.A. 9.0.6
Id: 5/8

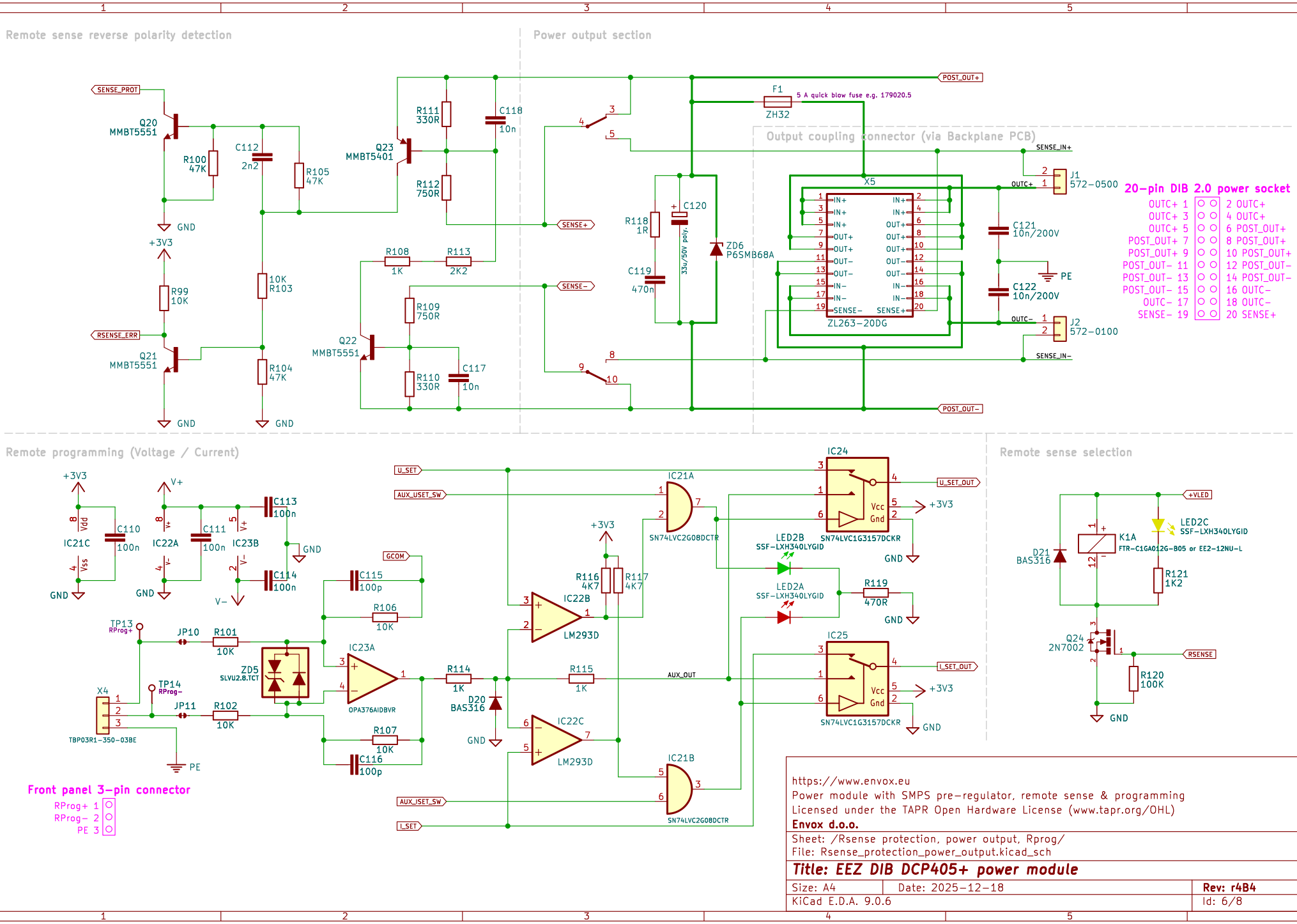

https://www.envox.eu
Power module with SMPS pre−regulator, remote sense & programming
Licensed under the TAPR Open Hardware License (www.tapr.org/OHL)
Envox d.o.o.

Sheet: /Rsense protection, power output, Rprog/
File: Rsense_protection_power_output.kicad_sch

Title: EEZ DIB DCP405+ power module

Size: A4	Date: 2025−12−18	**Rev: r4B4**
KiCad E.D.A. 9.0.6		Id: 6/8

Constant Voltage (CV) and Constant Current (CC) mode detection and indication

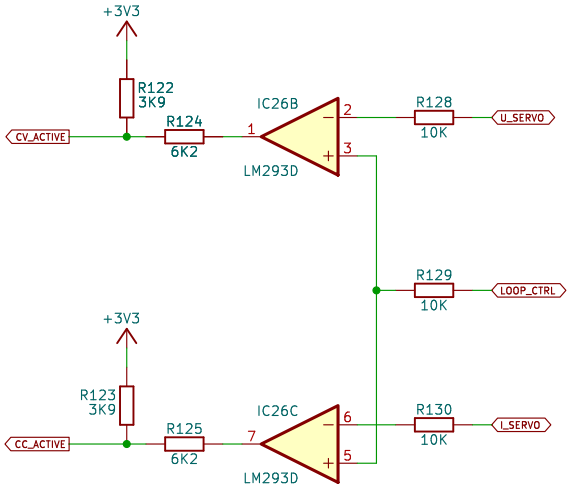

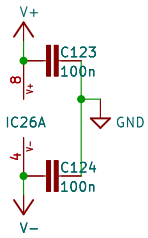

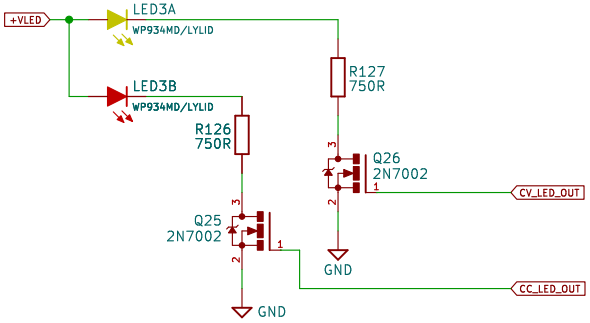

Over-voltage protection (OVP)

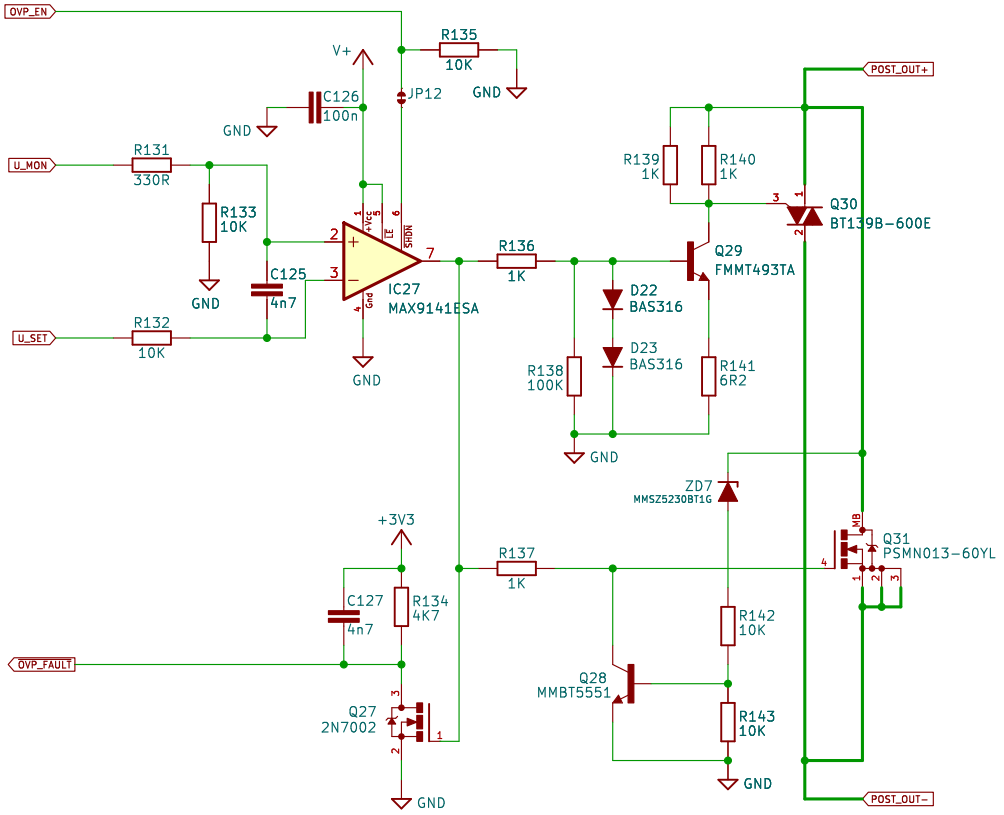

https://www.envox.eu
Power module with SMPS pre-regulator, remote sense & programming
Licensed under the TAPR Open Hardware License (www.tapr.org/OHL)
Envox d.o.o.

Sheet: /Mode detection, OVP/
File: CC_CV_OVP.kicad_sch

Title: EEZ DIB DCP405+ power module

Size: A4	Date: 2025-12-18	**Rev: r4B4**
KiCad E.D.A. 9.0.6		Id: 7/8