PROPOSED DUAL OCCUPANCY

No. 2a Stornway Crescent, Berkeley Vale, NSW 2261

DRAWING LIST

SHEET #	SHEET TITLE	REVISION	DATE
STR000	COVER SHEET	J	31-08-26
STR001	GENERAL NOTES AND DETAILS - 01	J	31-08-26
STR002	GENERAL NOTES AND DETAILS - 02	J	31-08-26
STR003	LOWER GROUND FOOTING & SLAB PLAN	J	31-08-26
STR004	SECTION AND DETAILS	J	31-08-26
STR005	SECTION AND DETAILS	J	31-08-26
STR006	SECTION AND DETAILS	J	31-08-26
STR007	GROUND FLOOR SUSPENDED CONCRETE SLAB PLAN	J	31-08-26
STR008	GROUND FLOOR - BOTTOM REINFORCEMENT PLAN	J	31-08-26
STR009	GROUND FLOOR - TOP REINFORCEMENT PLAN	J	31-08-26
STR010	SECTION AND DETAILS	J	31-08-26
STR012	FIRST FLOOR SLAB PLAN	J	31-08-26
STR013	FIRST FLOOR - BOTTOM REINFORCEMENT PLAN	J	31-08-26
STR014	FIRST FLOOR - TOP REINFORCEMENT PLAN	J	31-08-26
STR015	SECTION AND DETAILS	J	31-08-26
STR016	SECTION AND DETAILS	J	31-08-26
STR017	SECTION AND DETAILS	J	31-08-26
STR018	SECTION AND DETAILS	J	31-08-26
STR019	SECTION AND DETAILS	J	31-08-26
STR020	SECTION AND DETAILS	J	31-08-26
STR021	SEWER PROTECTION PLAN	J	31-08-26
STR022	SEWER PROTECTION DETAILS	J	31-08-26

PRINT IN COLOUR

MODULAR ENGINEERS P/L

Structural Engineering | Civil Engineering
Stormwater Engineering | Flood Engineering
Traffic Engineering | Temporary works

ABN : 66 646 960 929
TEL. : 02 873 08473
MOB. : 04 208 98999
EMAIL : info@modularengineers.com.au
WEBSITE : www.modularengineers.com.au
ADDRESS : 6/7 Parkes St., Parramatta NSW 2150

ARCHITECT:
GEGE CONSTRUCTION PTY LTD

PROJECT TITLE :
PROPOSED DUAL OCCUPANCY

SHEET NAME :
COVER PAGE / DRAWING LIST

PROJECT NUMBER:
STR0162-2025

INTERNAL REVISIONS :

ISSUE	DATE	DESCRIPTION	BY
J	31-08-26	ISSUED FOR CDC	M.J.
I	18-08-26	ISSUED FOR CDC	M.J.
H	12-06-26	ISSUED FOR CDC	M.J.
G	12-06-26	ISSUED FOR CDC	M.J.
F	14-05-26	ISSUED FOR CDC	M.J.
E	05-03-26	ISSUED FOR CDC	M.J.
D	13-02-26	ISSUED FOR CDC	M.J.
C	08-12-25	ISSUED FOR CDC	M.J.

AMENDMENTS

DRAWN : M.J. DATE: 31-08-26
DESIGNED : J.M. REVISION DATE:
QA CHECK : J.M. 31-08-26

APPROVED BY :

ALI AL - OBAIDI
MSc, BSc, MIEAust, CPEng, NER

RPEQ: 28316
NPER: 5358554

ISSUE TYPE :
CDC

SHEET NUMBER :
STR000

SHEET SIZE: A3
REVISION: J

NOTE: THE DESIGN AND DETAILS SHOWN ON THESE DRAWINGS ARE APPLICABLE TO THIS PROJECT ONLY AND MAY NOT BE REPRODUCED IN WHOLE OR IN PART OR BE USED FOR ANY OTHER PROJECT OR PURPOSE WITHOUT THE WRITTEN PERMISSION OF MODULAR ENGINEERS WITH WHOM COPYRIGHT RESIDES.

LEGEND

	DENOTED MASS CONCRETE PIERS TAKEN TO SHALE (REFER TO SECTION AND DETAILS)
	DENOTED REINFORCED CONCRETE PIERS TAKEN TO SHALE (REFER TO SECTION AND DETAILS)
	DENOTED SCREW PILE
PF1	DENOTED PAD CONCRETE FOOTING (REFER TO SECTION AND DETAILS)
	DENOTED COMPLETE WAFFLE POD 1090 x 1090 STANDARD POD
SP/(O/U)	DENOTED STEEL POST OVER/UNDER (REFER TO SCHEDULE)
TP/(O/U)	DENOTED TIMBER POST OVER/UNDER (REFER TO SCHEDULE)
DS/(O/U)	DENOTED TIMBER DOUBLE STUDS (OVER/UNDER)
	DENOTES EXISTING BRICK/TIMBER WALLS OVER
	DENOTES EXISTING BRICK/TIMBER WALLS UNDER
	DENOTES DEMOLISH BRICK/TIMBER WALLS (ALTERATION AND ADDITION PROJECTS)
	DENOTES NEW BRICK/TIMBER WALLS OVER (ALTERATION AND ADDITION PROJECTS)
	DENOTES CONCRETE COLUMN/WALLS OVER
	DENOTES CONCRETE COLUMN/WALLS UNDER
	DENOTES BOLCK WORK WALLS OVER
	DENOTES BOLCK WORK WALLS UNDER
EP	DENOTES ENGAGE PIER
	DENOTES REINFORCED DINCEL WALLS OVER
	DENOTES REINFORCED DINCEL WALLS UNDER
I.J.	DENOTES ISOLATION JOINT-10mm POLYETHYLENE BETWEEN WALLS/COLUMNS AND NEW SLAB
S.J.	DENOTES SAWN CONTROL JOINT (REFER TO DETAIL)
K.J.	DENOTES KEY CONSTRUCTION JOINT (REFER TO DETAIL)
G.D.	DENOTES GRADED DRAIN
STEP	DENOTES SLAB STEP (REFER TO ARCHITECTURE)
	DENOTES 45mm WET AREA (REFER TO DETAIL)
TR	DENOTES 3N12 TRIMER BAR 1.5m LONG
N.G.L.	DENOTES NATURAL GROUND LEVEL
RD.L.	DENOTES ROAD LEVEL
	DENOTES BRACING (REFER TO DETAILS)
BONDEK 125	DENOTES BONDEK DIRECTION AND THICKENS
F21	DENOTES FLOOR JOIST WITH DIRECTION (REFER TO SCHEDULE)
TB1	DENOTES TIMBER BEAM (REFER TO SCHEDULE)
SB1	DENOTES STEEL BEAM (REFER TO SCHEDULE)

CONCRETE QUALITY

ELEMENT	SLUMP	AGGREGATE (MAX. SIZE)	CEMENT TYPE	f'c
SLAB ON GROUND	80mm	20mm	A	25MPa U.O.N.
PIERS	80mm	20mm	A	25MPa U.O.N.
FOOTING	80mm	20mm	A	25MPa U.O.N.
COLUMN AND WALLS	80mm	20mm	A	REFER TO SCHEDULE
SUSPENDED SLAB	80mm	20mm	A	32MPa U.O.N.
BEAMS	80mm	20mm	A	32MPa U.O.N.

REINFORCEMENT COVER SCHEDULE

MEMBER	COVER (mm)			EXPOSURE CLASSIFICATION
	TOP	BOTTOM	SIDES	
INTERNAL SLAB ON GROUND	30mm	30mm	30mm	A1
EXTERNAL SLAB ON GROUND	40mm	40mm	40mm	A2
SUSPENDED SLAB INTERNAL	30mm	30mm	30mm	A1
SUSPENDED SLAB EXTERNAL	40mm	40mm	40mm	B1
FOOTING	50mm	50mm	50mm	B1
COLUMNS AND WALLS	40mm	40mm	40mm	A2

BRICK LINTEL SCHEDULE

OPENING SIZE(mm)	INTERNAL SKIN	EXTERNAL SKIIN	END BEARING
UP TO 900mm	100 x 8mm FLAT BAR	100 x 6mm FLAT BAR	100mm
1200	100 x 10mm FLAT BAR	100 x 8mm FLAT BAR	100mm
1500	100 x 100 x 8mm ANGLE	100 x 100 x 6mm ANGLE	150mm
2100	100 x 100 x 8mm ANGLE	100 x 100 x 6mm ANGLE	150mm
2400	100 x 100 x 8mm ANGLE	100 x 100 x 8mm ANGLE	150mm
2700	100 x 100 x 10mm ANGLE	100 x 100 x 10mm ANGLE	150mm
3000	100 x 100 x 12mm ANGLE	100 x 100 x 12mm ANGLE	150mm

NOTES:
A. ALL STEEL LINTELS TO BE HOT DIPPED GALVANIZED OR BY ANTI RUST PAINTING.
B. ABOVE ALL LINTELS, PROVIDE M.E.T MASONRY REINFORCEMENT FOR 2 COURSES AND CONTINUE 1000mm PAST OPENING.
C. MINIMUM THREE COURSES OF BRICK ABOVE THE LINTEL.

PIERING USED FOR WAFFLE POD SLABS

PIER BEARING STRATA	BEARING SOIL CAPACITY	2 STOREY BUILDING	PIER EMBEDMENT DEPTH
SHALE TO ROCK	450 KPa	300ø̄mm BORED PIERS AT 1800mm MAX CTS	1000mm EMBEDMENT INTO STRATA
STIFF CLAY	250 KPa	450ø̄mm BORED PIERS AT 1800mm MAX CTS	1500mm EMBEDMENT INTO STRATA
CONTROLLED FILL (CLAY)	150 KPa	—	
SAND	100 KPa	—	

LAPPING OF MESH

REINFORCEMENT IN RAFT AND SLABS SHALL HAVE COVERS AND BE SPLICED IN ACCORDANCE WITH THE FOLLOWING:

a) COVER FOR THE REINFORCEMENT SHALL BE 40 MM TO UNPROTECTED GROUND, 40 MM TO EXTERNAL EXPOSURE, 30 MM TO A MEMBRANE IN CONTACT WITH THE GROUND, AND 20 MM TO AN INTERNAL SURFACE. THE SLAB MESH SHALL BE PLACED TOWARDS THE TOP OF THE RAFT OR SLAB WITHIN THE ZONE DEFINED BY THESE LIMITS.

b) RAFT OR SLAB MESH SHALL BE LAPPED BY ONE FULL PANEL OF MESH SO THAT THE TWO OUTERMOST TRANSVERSE WIRES OF ONE SHEET OVERLAP THE TWO OUTERMOST TRANSVERSE WIRES OF THE SHEET BEING LAPPED, SUCH AS SHOWN IN.

c) TRENCH MESH SHALL HAVE AL CROSS WIRE CUT FLUSH WITH THE OUTER MAIN WIRES.. TRENCH MESH IN BEAMS SHALL BE OVERLAPPED BY THE WIDTH OF THE FABRIC AT T- AND L INTERSECTION. TRENCH MESH SHALL BE SPLICED, WHERE NECESSARY, BY LAP OF 500MM.

d) REINFORCING BARS SHALL HAVE A LAP LENGTH AT SPLICES NOT LESS THAN 500 MM, AT T- AND L- INTERSECTIONS, THE BARS SHALL BE CONTINUED ACROSS THE FULL WIDTH OF THE INTERSECTION. AT L-INTERSEXTIONS. ONE OUTER BAR SHALL BE BENT AND CONTINUED 500 MM, OR A BENT LAP BAR 500MM LONG ON EACH LEG SHALL BE PROVIDED.

e) SERVICES PENETRATIONS SHALL BE PERMITTED THROUGH THE MIDDLE THIRD OF THE EDGE AND STIFFENING BEAMS. THE EFFECT OF OTHER SERVICES PENETRATIONS SHALL BE TAKEN INTO ACCOUNT BY THE PROVISION OF EXTRA CONCRETE DEPTH OR REINFORCEMENT.

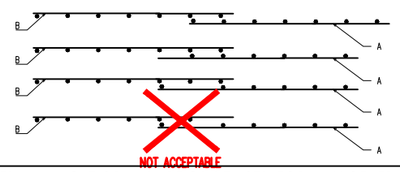

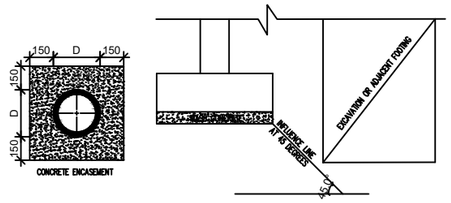

TYPICAL BACK PROPPING SEQUENCE
NOT TO SCALE

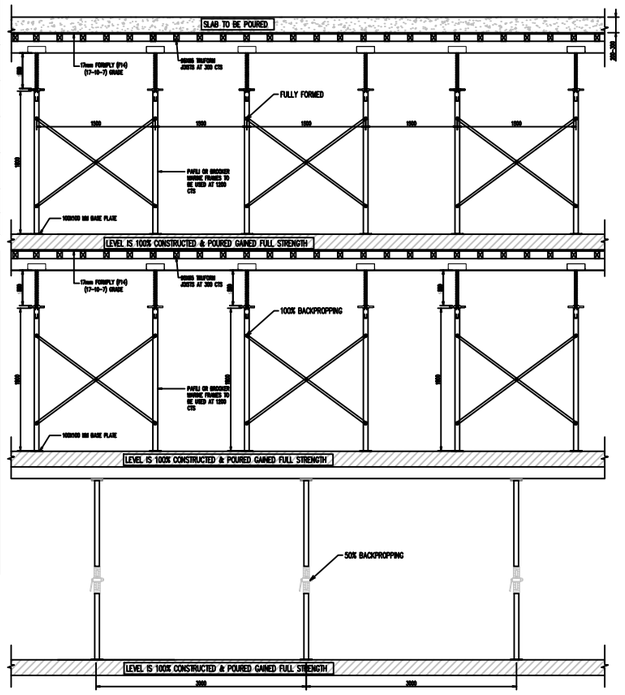

TYPICAL BACK PROPPING SEQUENCE
NOT TO SCALE

GENERAL NOTES OF BACKPROPPING FOR SLABS UP TO 300mm

1. THE FORMS TO A NEWLY POURED SLAB MAY BE REMOVED AND THE SLAB BACKPROPPED WHEN THE CONCRETE HAS REACHED A STRENGTH OF 24 MPA AND A MINIMUM AGE OF 7 DAYS. A MINIMUM OF TWO TEST CYLINDERS ARE REQUIRE TO VERIFY CONCRETE STRENGTH.
2. WHEN REMOVING FORMS, REMOVE FORMS UP TO MID-SPAN ONLY IN ANY ONE BAY BEFORE BACKPROPPING.
3. PROPS/BACKPROPS TO GROUND LEVEL WHEN SUPPORTING NEW FORMWORK TO LEVEL 1 ARE TO BE RELEASED AND TIGHTENED IMMEDIATELY PRIOR TO POURING THE NEW LEVEL 2 SLAB. THIS PROCESS IS TO OCCUR ONE PANEL AT TIME SEQUENTIALLY ACROSS THE WHOLE FLOOR, BEFORE POURING THE NEW LEVEL 2 SLAB THE LEVELS OF FORMS MUST BE CHECKED AND ADJUSTED AS NECESSARY. PROPS MUST ALSO BE MONITORED DURING POUR THE RELEASE AND TIGHTEN PROCESS IS TO OCCUR ONLY ONCE.
4. PT SLABS, THERE MUST ALWAYS BE AT LEAST 2 FLOORS SUPPORTING THE SLAB TO BE POURED (EXCLUSIVE OF NEWLY CAST FLOOR) THE LOWEST LEVEL OF BACKPROPPS MAY ONLY BE REMOVED WHEN THE LAST SLAB POURED HAS SATISFIED THE CRITERIA OF ITEM 1 ABOVE AND THE PROPS UNDER THIS NEWEST SLAB, HAVE BEEN RELEASED AND RE-TIGHTENED.
5. RC SLABS, THERE MUST ALWAYS BE AT LEAST 3 FLOORS SUPPORTING THE SLAB TO BE POURED (EXCLUSIVE OF NEWLY LAST FLOOR) THE LOWEST LEVEL OF BACKROPS MAY ONLY BE REMOVED WHEN THE LAST SLAB POURED HAS SATISFIED THE CRITERIA OF ITEM 1 ABOVE AND THE PROPS UNDER THIS NEWEST SLAB, HAVE BEEN RELEASED AND RE-TIGHTENED.
6. NO BACKPROPPS ARE TO BE REMOVED UNTIL THE CONCRETE IN THE SLAB HAS ACHIEVED ITS DESIGN STRENGTH AND THERE ARE THE REQUIRED NUMBER OF LEVELS TO PROPS, AND BACKPROPPS ABOVE THE SLAB IN QUESTION TO SUPPORT
7. WHEN REMOVING BACKPROPPS, PROPS AT MID-SPAN ARE TO BE REMOVED FIRST FOLLOWED IN SEQUENCE BY THOSE TOWARDS THE SUPPORT POINTS. THE UPPERMOST SLAB.
8. BRICKWOR/BLOCKWORK MUST NOT BE BUILT ON CONCRETE SLABS OR BEAMS UNTIL FORMWORK / BACKPROPPS SUPPORTING THE SAME HAVE BEEN REMOVED.

PRINT IN COLOUR

MODULAR ENGINEERS P/L

Structural Engineering | Civil Engineering
Stormwater Engineering | Flood Engineering
Traffic Engineering | Temporary works

ABN : 66 646 960 929
TEL. : 02 873 08473
MOB. : 04 208 98999
EMAIL : info@modularengineers.com.au
WEBSITE : www.modularengineers.com.au
ADDRESS : 6/7 Parkes St., Parramatta NSW 2150

ARCHITECT:
GEGE CONSTRUCTION PTY LTD

PROJECT TITLE :
PROPOSED DUAL OCCUPANCY

SHEET NAME :
GENERAL NOTES AND DETAILS - 01

PROJECT NUMBER:
STR0162-2025

INTERNAL REVISIONS :

ISSUE	DATE	DESCRIPTION	BY
J	31-08-26	ISSUED FOR CDC	M.J.
I	18-08-26	ISSUED FOR CDC	M.J.
H	12-06-26	ISSUED FOR CDC	M.J.
G	12-06-26	ISSUED FOR CDC	M.J.
F	14-05-26	ISSUED FOR CDC	M.J.
E	05-03-26	ISSUED FOR CDC	M.J.
D	13-02-26	ISSUED FOR CDC	M.J.
C	08-12-25	ISSUED FOR CDC	M.J.

AMENDMENTS

DRAWN : M.J. DATE: 31-08-26
DESIGNED : J.M. REVISION DATE:
QA CHECK : J.M. 31-08-26

APPROVED BY :

ALI AL - OBAIDI
MSc, BSc, MIEAust, CPEng, NER
RPEQ: 28316
NPER: 5358554

ISSUE TYPE :
CDC

SHEET NUMBER :
STR001

SHEET SIZE: A3
REVISION: J

NOTE: THE DESIGN AND DETAILS SHOWN ON THESE DRAWINGS ARE APPLICABLE TO THIS PROJECT ONLY AND MAY NOT BE REPRODUCED IN WHOLE OR IN PART OR BE USED FOR ANY OTHER PROJECT OR PURPOSE WITHOUT THE WRITTEN PERMISSION OF MODULAR ENGINEERS WITH WHOM COPYRIGHT RESIDES.

GENERAL

A. THESE ENGINEERING DRAWINGS HAVE BEEN PREPARED FROM INFORMATION AVAILABLE AT THE TIME OF ISSUE. AS THIS INFORMATION MAY BE THE SUBJECT OF CHANGE PRIOR TO OR DURING CONSTRUCTION THE CONTRACTOR IS TO ADVISE THE ENGINEER WHERE DISCREPANCIES OCCUR.
B. THESE DRAWINGS SHALL NOT BE USED FOR FINAL SETOUT OF THE PROJECT UNLESS SPECIFICALLY STATED.
C. INSPECTIONS ARE REQUIRED TO BE PERFORMED BY A DULY APPOINTED INSPECTOR FROM 'MODULAR ENGINEERS'. THESE INSPECTIONS ARE REQUIRED TO BE PERFORMED IN ACCORDANCE WITH THE SCOPE OF INSPECTIONS PREPARED BY 'MODULAR ENGINEERS'.THE INSPECTOR IS TO BE GIVEN A MINIMUM OF 48 HOURS NOTICE.
D. PRIOR TO THE COMMENCEMENT OF WORKS THE CONTRACTOR IS TO IDENTIFY ALL EXISTING SERVICES. ANY DAMAGE TO EXISTING SERVICES IS TO BE RECTIFIED AT THE CONTRACTORS EXPENSE. SERVICES SHOWN ON 'MODULAR ENGINEERS' DRAWINGS ARE INDICATIVE ONLY.
E. DURING CONSTRUCTION THE CONTRACTOR SHALL BE RESPONSIBLE FOR MAINTAINING THE STABILITY OF THE WORKS AND ENSURE NO PART IS OVERSTRESSED.
F. WORKMANSHIP AND MATERIALS SHALL BE IN ACCORDANCE WITH THE CURRENT AUSTRALIAN STANDARDS AND BCA STATUTORY REQUIREMENTS, EXCEPT WHERE VARIED BY THE CONTRACT DOCUMENTS.
G. THE CONTRACTOR SHALL BE RESPONSIBLE FOR ENSURING THAT SUFFICIENT TOLERANCES ARE PROVIDED AND INTEGRATED THROUGHOUT ALL THE ELEMENTS OF THE WORKS.
H. ALL NON-LOAD BEARING ELEMENTS SHALL BE KEPT CLEAR OF THE STRUCTURE SOFFIT BY AN ALLOWANCE DETERMINED FROM SPAN/250 OR CANTILEVER/125 BUT NOT LESS THAN 20mm, UNLESS NOTED OTHERWISE ON THE DRAWINGS.
I. ALL DIMENSIONS ARE IN MILLIMETERS UNLESS STATED OTHERWISE.
J. SUPERIMPOSED DEAD LOADS AND LIVE LOADS HAVE BEEN DETERMINED IN ACCORDANCE WITH AS1170.1 AND ARE SHOWN ON THE GENERAL ARRANGEMENT DRAWINGS.
WIND AND EARTHQUAKE LOADS HAVE BEEN DETERMINED IN ACCORDANCE WITH AS1170.2 AND AS1170.4 RESPECTIVELY.

FOUNDATION MAINTENANCE AND DRAINAGE

A. ALL LOOSE MATERIAL AND WATER TO BE CLEANED OUT OF THE FOUNDATION. FORMWORK TO BE USED WHERE THE SIDES OF THE FOUNDATION ARE NOT STABLE.
B. 5. A 50mm MINIMUM BLINDING LAYER SHOULD BE APPLIED TO THE BASE OF ALL FOUNDATIONS. WHERE THE FOUNDING MATERIAL IS DEEPER THAN REQUIRED FOR THE FOOTING THE EXCAVATION IS TO BE BACKFILLED WITH A WEAK MIX CONCRETE (N10) TO THE UNDERSIDE OF THE FOOTING.
C. ALL WORKMANSHIP AND MATERIALS MUST BE IN ACCORDANCE WITH AS2870.
D. SURFACE DRAINAGE MUST BE PLANNED AND DEVELOPED TO AVOID WATER ENTERING AGAINST OR NEAR THE FOOTING. THE GROUND IN THE DIRECT LOCALITY OF THE PERIMETER FOOTING, INCLUDING THE FOUND UPHILL FROM THE SLAB ON CUT-AND-FILL SITES , MUST BE GRADED TO FALL 50MM MINIMUM AWAY FROM THE FOOTING OVER A DISTANCE OF 1 M AND SHAPED TO PREVENT THE ENTRANCE OF WATER. FILLING MUST BE PLACED ADJACENT TO THE BUILDING, THE FILLING MUST BE COMPACTED AND GRADED TO SAFEGUARD DRAINAGE OF WATER AWAY FROM THE BUILDING.
E. ANY PRIVATE SERVICE TRENCHES MUST BE SLOPED AWAY FROM THE BUILDING AND SUITABLY BACKFILLED, IN ACCORDANCE WITH AS2870.
F. MODERATELY & HIGH REACTIVE SITES REQUIRE SUPPLEMENTARY PLUMBING SERVICES & REQUIREMENTS.
G. AVOID PENETRATIONS OF FOOTINGS AND EDGE BEAMS. HOWEVER, NECESSARY PENETRATIONS MUST BE SLEEVED TO ALLOW FOR MOVEMENT.
H. AVOID DRAINAGE & PLUMBING BELOW THE SLAB UNLESS REQUIRED. REFER TO AS/NZS 3500 CLAUSE 4.10
I. IT IS ESSENTIAL THAT THE CELL POLYETHYLENE MEMBRANE MUST BE SURROUNDING ALL PIPE WORK INCLUDING STORMWATER & SANITARY PLUMBING DRAIN PIPE PENETRATIONS
J. ALL WALLS AND COLUMNS SHALL BE CONCENTRIC WITH THE SUPPORTING FOOTINGS UNLESS NOTED OTHERWISE ON THE DRAWINGS.
K. WHERE AN EXCAVATION IS REQUIRED OR EXISTS BELOW THE BASE OF A FOOTING THE SIDE OF THE EXCAVATION SHALL BE LOCATED AWAY FROM EDGE OF FOOTING BY THE AME DISTANCE THAT THE EXCAVATION IS BELOW FOOTING BASE. WHERE THIS CANNOT BE ACHIEVED, 'MODULAR ENGINEERS' SHALL BE CONTACTED FOR FURTHER DIRECTION. SHALL BE CONTACTED FOR FURTHER DIRECTION. MASS CONCRETE IS TO EXTEND TO THE INFLUENCE LINE AS REQUIRED.

GENERAL CONCRETE NOTES

A. CONCRETE WORK SHALL BE IN ACCORDANCE WITH AS3600 AND WITH THE PROJECT SPECIFICATIONS.
B. CONSTRUCTION JOINTS SHALL BE PROPERLY FORMED AND USED ONLY WHERE SHOWN ON 'MODULAR ENGINEERS' DRAWINGS OR SPECIFICALLY APPROVED BY 'MODULAR ENGINEERS'.
C. ALL THICKNESS SHOWN ARE MINIMUM STRUCTURAL REQUIREMENTS, NO REDUCTION THICKNESS DUE TO FALLS OR TOPPING IS PERMITTED. REFER ARCHITECT DRAWINGS FOR ALL SLAB FALLS AND CONFIRMATION OF SLAB STEPS.
D. UNLESS A GROOVE LINE ALLOWANCE HAS BEEN NOTED ON THE DRAWINGS, NO GROOVE LINES ARE PERMITTED, EXCEPT AT SLAB LINES. ALL GROOVE LINES ARE TO BE SUBMITTED TO 'MODULAR ENGINEERS' FOR APPROVAL.
E. THE FACE OF ALL CONCRETE AGAINST WHICH NEW CONCRETE IS TO BE CAST IS TO BE THOROUGHLY MECHANICALLY SCRABBLED, FULLY EXPOSING THE AGGREGATE MATRIX.
F. NO PENETRATIONS GREATER THAN 150mm DIAMETER, OR EMBEDMENT OF PIPES GREATER THAN 40mm DIAMETER OTHER THAN THOSE SHOWN ON THE STRUCTURAL DRAWINGS SHALL BE MADE IN CONCRETE SLABS. FOR ALL OTHER CONCRETE MEMBERS NO PENETRATIONS, CHASES OR EMBEDMENT SHALL BE MADE WITHOUT PRIOR APPROVAL BY 'MODULAR ENGINEERS'.
G. 7. CONDUITS GREATER THAN 25mm DIAMETER CAST INTO CONCRETE MEMBERS SHALL BE SPACED AT A MAXIMUM DISTANCE POSSIBLE AND UNDER NO CIRCUMSTANCES CLOSER THAN A CLEAR SPACING OF TWICE THE LARGER CONDUIT DIAMETER FROM PARALLEL REINFORCEMENT OR ANY OTHER CONDUIT.
H. THE CHARACTERISTIC COMPRESSIVE STRENGTH (f'c) AT 28 DAYS OF IN PLACE CONCRETE SHALL BE AS NOTED ON THE DRAWINGS.
I. MAXIMUM AGGREGATE SIZE.....20mm.
J. SLUMP.....80mm.
K. ALL CONCRETE SHALL BE VIBRATED.
L. ALL CONCRETE SHALL BE CURED IN ACCORDANCE WITH THE SPECIFICATION.
M. ALL CONCRETE SHALL BE SAMPLED AND TESTED IN ACCORDANCE WITH AS1012 AND THE PROJECT SPECIFICATION.
N. ALL FORMWORK SHALL COMPLY WITH AS3610.
O. EACH FLOOR SHALL BE FULLY PROPPED TO THE FLOOR BELOW IN ACCORDANCE WITH AS3610 (FORMWORK CODE).
P. THE FLOOR BELOW SHALL BE BACKPROPPED THROUGH A MINIMUM OF TWO STOREY BELOW. THIS RESULTS IN A MINIMUM OF THREE STOREY PROPPED AT ALL TIMES. (REFER TO TYPICAL BACK PROPPING SEQUENCE DIAGRAM).
Q. PROPS MAY BE REMOVED AFTER 28 DAYS OF CURING OR AFTER 14 DAYS IF THE CONCRETE HAS REACHED ITS CHARACTERISTIC STRENGTH (AS PROVED BY CYLINDER TEST RESULTS).

REINFORCEMENT

A. REINFORCEMENT IS TO BE MANUFACTURED IN ACCORDANCE WITH AS1302 AND SHALL BE FIXED AS SHOWN ON DRAWINGS.
B. REINFORCEMENT IS SHOWN IN DRAWINGS AND IS NOT NECESSARILY IN TRUE PROJECTION. CONNECTIONS TO REINFORCEMENT MUST BE MADE ONLY AT THE LOCATIONS SHOWN. IF REINFORCEMENT IS NEEDED ELSEWHERE IT MUST BE APPROVED BY THE PROJECT ENGINEER.
C. MODIFYING REINFORCEMENT/S IS NOT PERMITTED UNLESS SHOWN ON THE STRUCTURAL DRAWINGS OR APPROVED BY THE PROJECT ENGINEER.
D. THE BAR SIZE IS INDICATED BY A NUMBER AFTER THE SYMBOL, WHICH INDICATES THE BAR DIAMETER IN MILLIMETERS.
E. ALL REINFORCEMENT BARS AND FABRIC MUST FULFIL WITH AS4671. FABRIC MUST BE SOURED IN THE FORM OF FLAT SHEETS.
F. REINFORCEMENT SPACING NOMINATED ON DRAWINGS IS TO ASSIST SCHEDULER AND STEEL FIXER TO ASSESS TOTAL NUMBER OF BARS REQUIRED. WHERE BARS PLACED IN ACCORDANCE WITH SPACING NOMINATED FOUL WITH OTHER STRUCTURAL REQUIREMENTS, PREFERENCE IS TO BE GIVEN TO RELOCATING BARS BY LOCALLY ADJUSTING SPACING TO ENABLE ASSEMBLY OF REINFORCEMENT TO BE COMPLETED. ENGINEER IS TO BE CONTACTED IN THE EVENT THAT REINFORCEMENT IS NEEDED TO BE CUT ON SITE PRIOR TO CONTINUING.
G. REINFORCEMENT MATERIAL IS INDICATED BY THE SYMBOLS BELOW:

Y – DEFORMED BAR GRADE 400
N– DEFORMED BAR GRADE 500 (NORMAL DUCTILITY)
R– PLAIN ROUND BAR GRADE 250
W– PLAIN WIRE GRADE 450
F– FABRICS GRADE 450
TM– TRENCH MESH

H. FABRIC REINFORCEMENT MUST BE LAPPED ONE MESH PLUS 30 mm AT SPLICES AND PLACED ON BAR CHAIRS AT 1m CTS.
I. REINFORCING BARS MUST HAVE A LAP LENGTH AT SPLICES NOT LESS THAN 500mm UP TO A BAR DIA. OF 12mm, AND 700mm UP TO A BAR DIA. OF 16mm. UNLESS NOTED OTHERWISE.
J. WELDING OF REINFORCEMENT BARS IS NOT PERMITTED UNLESS APPROVED.
K. BENEATH THE SLAB FABRIC REINFORCING BARS SHOULD BE TIED IF USED OR OTHERWISE PLACED ON CHAIRS.
L. SPLICES IN REINFORCEMENT MADE IN POSITIONS OTHER THAN SHOWN, MUST BE APPROVED BY THIS CONSULTANCY'S ENGINEER. WHERE LAP LENGTH IS NOT SHOWN, LAPPING MUST BE APPROPRIATE TO IMPROVE THE FULL STRENGTH OF THE REINFORCEMENT.
M. CONCRETE COVERS NOTED ARE MEASURED FROM THE FORMWORK OR GROUND FACE TO THE OUTERMOST REINFORCEMENT COMPONENT. ie. IN COLUMNS AND BEAMS TO THE OUTSIDE OF TIES OR LIGATURES.
N. COVER SHALL BE AS NOTED ON THE RELEVANT DRAWINGS.
O. COVER TO BE MAINTAINED DURING POURING BY THE USE OF PLASTIC CHAIRS OR PLASTIC TIPPED METAL CHAIRS.
P. WHERE NO REINFORCEMENT IS SHOWN ON THE DRAWING AT RIGHT ANGLES TO THE MAIN REINFORCEMENT DISTRIBUTION REINFORCEMENTS IS TO BE PROVIDED.
Q. PRIOR TO POURING CONCRETE REINFORCEMENT AND VOID FORMERS MUST BE FIXED INTO POSITION THROUGH PROPRIETARY SPACERS, BAR CHAIRS AND LIGATURES TO ACCOMPLISH THE REQUIRED REINFORCEMENT POSITION AND COVER. ALL REINFORCEMENT MUST BE SUPPORTED ON A PLASTIC SPREAD OR STEEL CHAIRS AT A MAXIMUM OF 4 PER POD.

AGGRESSIVE SOILS

A. ANY CONTAMINATING MATERIALS SHOULD BE REMOVED OFF THE SITE IN ACCORDANCE WITH LOCAL AUTHORITY GUIDELINES.
B. BUILDINGS WITH MASONRY OR CONCRETE THAT IS UNPROTECTED FROM SALINE OR ACID SULFATE SOILS MUST BE PROTECTED IN ACCORDANCE WITH THE SITE MANAGEMENT PLANS PRODUCED BY THE CONTRACTED GEOTECHNICAL AND LOCAL AUTHORITIES.
C. ANY PROTECTION REQUIREMENTS MUST BE DELIVERED TO THIS OFFICE BY THE CONTRACTOR PRECEDING TO COMMENCEMENT OF DESIGN.

CLAY BRICK MASONRY

D. MASONRY, MORTAR AND BUILT MASONRY COMPONENTS MUST COMPLY WITH AS3700 AND AS4773 AND THE PROJECT SPECIFICATION.
E. THE SLAB IS PLANED FOR ARTICULATION REQUIREMENTS. ARTICULATION JOINTS SHALL BE CARRIED OUT IN ACCORDANCE WITH AS4773 AND CEMENT, CONCRETE AND AGGREGATES AUSTRALIA BOOKLET TECHNICAL NOTE 61 (ARTICULATED WALLING) AND AS3700 SECTION 12 16.4.
F. MASONRY UNITS TO HAVE A MINIMUM CHARACTERISTIC UNCONFINED STRENGTH OF 20MPa IN ACCORDANCE WITH AS2733.
G. MASONRY TO BE BEDDED IN FRESHLY PREPARED MORTAR.
   (a) CONCRETE BLOCKS :–
   MORTAR MIX TO BE UNIFORMLY MIXED IN A RATIO OF ONE PART CEMENT, ONE PART LIME AND SIX PARTS SAND CONFORMING TO AS2701. 'BRICKIES LOAM' SHALL NOT BE USED.
   (b) CLAY BRICKS :–
   MORTAR MIX TO BE UNIFORMLY MIXED IN THE RATIO OF ONE PART CEMENT, THREE PARTS SAND AND ONE FOURTH PART LIME CONFORMING TO AS2701. 'BRICKIES LOAM' SHALL NOT BE USED.
H. MASONRY ARTICULATION JOINTS SHALL BE POSITIONED AT ANY POSITION WHERE NEW BRICKWORK ALIGNS WITH OLD BRICKWORK.
I. WHERE MASONRY ARTICULATION IS INDICATED AT THE SIDE OF OPENINGS WITH BRICKWORK ABOVE THE OPENING, A SLIP JOINT AROUND THE END OF THE LINTEL MUST BE DELIVERED WITH CARE.
J. MASONRY MUST BE LAYED IN FRESHLY PRIMED MORTAR. CONCRETE BLOCKS: MORTAR MIX TO BE UNIFORMLY MIXED TO A RATIO OF ONE-PART CEMENT, ONE-PART LIME AND SIX PARTS SAND CONFORMING TO AS2701.
K. CLAY BLOCKS: MORTAR MIX TO BE UNIFORMLY MIXED TO A RA 110 OF ONE-PART CEMENT, THREE PARTS SAND AND ONE FOURTH PART LIME CONFORMING TO AS2701.
L. GROUT MUST HAVE A COMPRESSIVE STRENGTH (F'C) OF 20 MPa AT 28 DAYS, A SLUMP PF 125mm IN A 150mm SLUMP CONE, A MAXIMUM AGGREGATE SIZE OF 10mm AND MUST BE IN ACCORDANCE WITH AS3700.
M. THE LAYING OF MASONRY MUST BE FULL FACE WITH CROSS JOINTS ENTIRELY FILLED, JOINT THICKNESS SHALL NOT EXCEED 12mm.
N. THE CAVITY MUST NOT SURPASS 100mm AND SHALL NOT BE SMALLER THAN 40mm UNLESS NOTED OTHERWISE. CAVITY MUST BE KEPT CLEAN AND CLEAR OF IMPEDIMENTS AND COMPLIANT WITH NCC.
O. VERTICAL JOINTS UNLESS NOTED OTHERWISE BRICKS WITH A POTENTIAL FIVE YEAR EXPANSION OF 1 mm/m. BUILDER MUST NOTIFY PACE STRUCTURAL IF DISTINGUISHING EXPANSION OF BRICK UNITS IS DIFFERENT BY 10% OR MORE.
P. RAKING OF JOINTS IS NOT ALLOWABLE WITHOUT AUTHORIZATION FROM AN ENGINEER.
Q. ALL WALLS ARE TO BE KEPT STEADY AT ALL STAGES OF CONSTRUCTION AND MUST NOT BE OVER STRESSED AT ANY POINT DURING DEVELOPMENT.
R. UNLESS NOTED OTHERWISE, NO CHASES OR RECESSES IS ACCEPTABLE IN MASONRY WALLS WITHOUT THE APPROVAL OF THE ENGINEER.
S. WALL TIES TO BE DEVELOPED IN AND FLEXED TO THE TIMBER FRAME 300 EACH SIDE OF ANY ARTICULATION JOINT, AT EVERY THIRD (3RD) COURSE.
T. NON LOAD BEARING WALLS MUST BE DISCONNECTED FROM CONCRETE ABOVE BY 12MM THICK CLOSE CELL POLYETHYLENE STRIPS.
U. BEDDING OF MASONRY SHALL BE FULL FACE WITH CROSS JOINTS COMPLETELY FILLED. JOINT THICKNESS SHALL NOT EXCEED 12mm.
V. PROVIDE WALL TIES AT 600mm MAXIMUM CENTERS VERTICALLY AND HORIZONTALLY. REFER TO MASONRY DETAILS FOR WALL TIE SETOUT AT OPENINGS.

STRUCTURAL STEELWORK NOTES

A. MATERIALS FABRICATIONS AND ERECTION TO BE STRICTLY IN ACCORDANCE WITH AS1538, AS1554, AND 4100 AND WITH THE SPECIFICATIONS.
B. UNLESS NOTED OTHERWISE ALL STEEL SHALL BE IN ACCORDANCE WITH BHP 300 PLUS TO ASNZ3679.1 (1996)– HOT ROLLED SECTIONS GRADE 300 TO AS3679.2 (1991)– WELDED SECTIONS.
C. GRADE 250 TO AS3678 (1996)– HOT ROLLED PLATES & SLABS. GRADE 350 TO AS1163 (1993)– HOLLOW SECTIONS
D. WELDING SHALL COMPLY WITH AS 1554.
E. WELDS SHALL BE 6mm CONTINUOUS FILLET UNLESS NOTED OTHERWISE. WELDS TO PURLING CLEATS SHALL BE 4mm cfw.
F. ELECTRODES SHALL BE E41XX OR E48XX.
G. BOLTS DENOTED 46/S – ARE COMMERCIAL BOLTS OF STRENGTH GRADE 46 TO AS1111 – SNUG TIGHT.
H. BOLTS DENOTED 8.8/S,8.8/TB AND 8.8/TF ARE HIGH STRENGTH STRUCTURAL BOLTS OF STRENGTH GRADE 8.8 TO AS 1252; 8.8/S DENOTED BOLTS SNUG TIGHT; 8.8/TB AND 8.8/TF DENOTES BOLTS FULLY TENSIONED TO AS1511; 8.8/TB DENOTES BEARING JOINT; 8.8/TF DENOTES FRICTION JOINT.
I. LOAD INDICATOR WASHERS SHALL BE USED UNDER THE THE BOLT HEAD FOR ALL 8.8/TF 8.8/TB BOLTS.
J. BOLTS SHALL BE M20 UNLESS NOTED NOTED OTHERWISE. BOLTS SHALL BE 8.8/S UNLESS NOTED OTHERWISE.
K. PURLIN BOLTS TO BE M12 – 4.6/S WITH A MINIMUM OF 2 BOLTS PER PURLIN END.
L. BOLT HOLES SHALL BE BOLT DIAMETER. +2mm FOR STEEL TO STEEL CONNECTIONS. +4mm FOR STEEL TO CONCRETE CONNECTIONS. +6mm FOR BASE PLATES.
M. ALL PLATES AND STIFFENERS SHALL BE 10mm THICK U.N.O. CORROSION PROTECTION.
N. CONCRETE ENCASED STEELWORK TO BE WRAPPED IN ACCORDANCE WITH AS 4100 AND TO HAVE 50mm MINIMUM COVER TO CONCRETE. LOCATION OF PURLOIN AND GRITS TO BE OBTAINED FROM ARCHITECTS
O. DRAWINGS OR ROOFING CONTRACTORS.
P. PROVIDE SEAL PLATES TO ENDS OF HOLLOW SECTIONS.
Q. ALL STRUCTURAL STEELWORK WHICH IS EXPOSED OR IN CONTACT WITH EXPOSED BRICKWORK OR BLOCKWORK AND ALL LINTELS, SHALL BE HOT DIP GALVANIZED UNLESS NOTED OTHERWISE.
R. ALL STEELWORK TO BE TEMPORARILY BUT SECURELY BRACED UNTIL ALL FINAL BRACING, CLADDING,AND STABILIZING BRICKWORK OR BLOCKWORK HAVE BEEN COMPLETED.
S. ARRANGE FOR CERTIFICATION FROM A QUALIFIED CONSULTANCY THAT THE TRUSSES ARE STRUCTURALLY SATISFACTORY.

GENERAL MAINTENANCE

A. IN ACCORDANCE TO AS3660 IT IS PERMITTED TO PROTECT THE RESIDENCE FROM TERMITES IF IT IS NECESSARY.
B. INSPECTIONS OF THE RESIDENCE AND IMMEDIATE SURROUNDINGS MUST BE CARRIED OUT BY A FULLY QUALIFIED PEST PROFESSIONAL YEARLY BY THE OWNER.
C. THE MAINTENANCE OF THE SITE IS WHOLLY THE RESPONSIBILITY OF THE OWNER. ALL SANCTIONS OUTLINED IN THE FOLLOWING SHOULD BE CARRIED OUT IN ITS ENTIRETY: CISRO BOOKLET FOUNDATION MAINTENANCE AND FOOTING PERFORMANCE: A HOME OWNERS GUIDE.
D. S2870 APPENDIX B 'PERFORMANCE CRITERIA AND FOUND AII ON MAINTENANCE' AND APPENDIX C 'CLASSIFICATION OF DAMAGE DUE TO FOUNDATION MOVEMENTS'.
E. THE ENDORSED DISTANCE OF A NEW TREE ON SITE MUST BE EQUAL OR GREATER THAN 75% OF THE MATURE TREE HEIGHT FOR M SITES, 100% OF THE MATURE HEIGHT FOR H1 AND H2 SITES, AND 150% OF THE MATURE HEIGHT FOR E SITES.
F. GARDEN BEDS ADJACENT TO THE HOUSE SHOULD BE REMOVED. ADDITIONALLY, AVOID OVER WATERING GARDENS CLOSE TO THE RESIDENTIAL FOOTINGS.
G. ANY FUTURE CRACKING OCCURRING IN THE SLAB AND/OR FOOTINGS MUST BE ASSESSED BY A QUALIFIED PEST EXPERT AND THIS CONSULTANCY.

ROOF SUPPORT AND LOADING

A. ROOF LOADINGS MUST BE SUPPORTED BY PATENTED TRUSSES ONTO EXTERNAL WALLS ONLY UNLESS NOTED OTHERWISE.
B. PITCHED ROOF REQUIREMENTS MUST BE DELIVERED BY THE CONTRACTOR TO THIS CONSULTANCY IN ADVANCED OF DETAILING.
C. THE BASIS OF DESIGN MUST BE SAA LOADING CODE AS1170.1, AS 1170.2 AND SAA TIMBER STRUCTURE CODE AS1720.1.
D. PLAN OF THE ROOF TRUSSES MUST BE IN ACCORDANCE WITH THE WIND CLASSIFICATIONS AS SPECIFIED.
E. PROVIDE ANY TEMPORARY BRACING NEEDED TO MAINTAIN THE STRENGTH OF THE TRUSSES AT ALL STAGES OF PRODUCTION.
F. MAKE ALLOWANCES FOR SIZE AND LOCATIONS OF MECHANICAL SERVICES AND AIR CONDITIONING DUCTWORK IF APPLICABLE.
G. ARRANGE FOR CERTIFICATION FROM A QUALIFIED CONSULTANCY THAT THE TRUSSES ARE STRUCTURALLY SATISFACTORY.

PRINT IN COLOUR

MODULAR ENGINEERS P/L

Structural Engineering | Civil Engineering
Stormwater Engineering | Flood Engineering
Traffic Engineering | Temporary works

ABN : 66 646 960 929
TEL. : 02 873 08473
MOB. : 04 208 98999
EMAIL : info@modularengineers.com.au
WEBSITE : www.modularengineers.com.au
ADDRESS : 6/7 Parkes St., Parramatta NSW 2150

ARCHITECT:
GEGE CONSTRUCTION PTY LTD

PROJECT TITLE :
PROPOSED DUAL OCCUPANCY

SHEET NAME :
GENERAL NOTES AND DETAILS - 02

PROJECT NUMBER:
STR0162-2025

INTERNAL REVISIONS :

ISSUE	DATE	DESCRIPTION	BY
J	31-08-26	ISSUED FOR CDC	M.J.
I	18-08-26	ISSUED FOR CDC	M.J.
H	12-06-26	ISSUED FOR CDC	M.J.
G	12-06-26	ISSUED FOR CDC	M.J.
F	14-05-26	ISSUED FOR CDC	M.J.
E	05-03-26	ISSUED FOR CDC	M.J.
D	13-02-26	ISSUED FOR CDC	M.J.
C	08-12-25	ISSUED FOR CDC	M.J.

AMENDMENTS

DRAWN : M.J. DATE: 31-08-26
DESIGNED : J.M. REVISION DATE:
QA CHECK : J.M. 31-08-26

APPROVED BY :

ALI AL - OBAIDI
MSc, BSc, MIEAust, CPEng, NER
RPEQ: 28316
NPER: 5358554

ISSUE TYPE :
CDC

SHEET NUMBER :
STR002

SHEET SIZE: A3
REVISION: J

NOTE: THE DESIGN AND DETAILS SHOWN ON THESE DRAWINGS ARE APPLICABLE TO THIS PROJECT ONLY AND MAY NOT BE REPRODUCED IN WHOLE OR IN PART OR BE USED FOR ANY OTHER PROJECT OR PURPOSE WITHOUT THE WRITTEN PERMISSION OF MODULAR ENGINEERS WITH WHOM COPYRIGHT RESIDES.

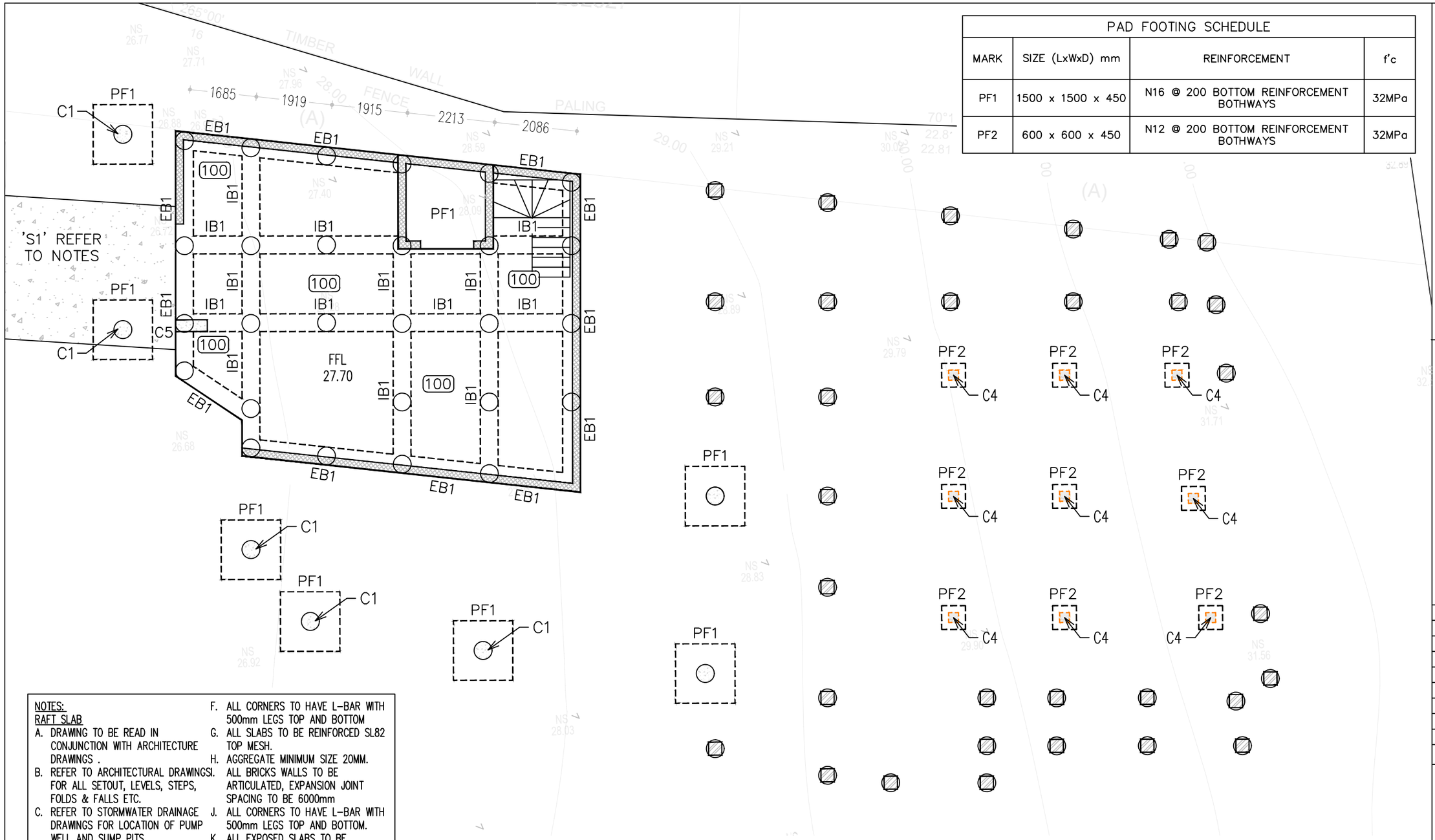

PAD FOOTING SCHEDULE			
MARK	SIZE (LxWxD) mm	REINFORCEMENT	f'c
PF1	1500 x 1500 x 450	N16 @ 200 BOTTOM REINFORCEMENT BOTHWAYS	32MPa
PF2	600 x 600 x 450	N12 @ 200 BOTTOM REINFORCEMENT BOTHWAYS	32MPa

NOTES:
RAFT SLAB

A. DRAWING TO BE READ IN CONJUNCTION WITH ARCHITECTURE DRAWINGS .
B. REFER TO ARCHITECTURAL DRAWINGSI. FOR ALL SETOUT, LEVELS, STEPS, FOLDS & FALLS ETC.
C. REFER TO STORMWATER DRAINAGE DRAWINGS FOR LOCATION OF PUMP WELL AND SUMP PITS.
D. ASSUMED SITE IN ACCORDANCE WITH AS2870 CLASS M – GEOTECH TO CONFIRM.
E. SAFE BEARING CAPACITY HAS BEEN ASSUMED TO BE A MIN. OF 150 kN/m^2 TO BE BEARING ON STIFF CLAY.
F. GEOTECHNICAL ENGINEER TO VERIFY THE SAFE BEARING CAPACITY OF FOUNDATION MATERIAL PRIOR TO CONSTRUCTION.
G. CONCRETE RAFT (f'c)=32 MPa. FOR SALINITY FOR SOIL OTHERWISE 25MPa WITH A SLUMP OF 80MM.
F. ALL CORNERS TO HAVE L–BAR WITH 500mm LEGS TOP AND BOTTOM
G. ALL SLABS TO BE REINFORCED SL82 TOP MESH.
H. AGGREGATE MINIMUM SIZE 20MM. ALL BRICKS WALLS TO BE ARTICULATED, EXPANSION JOINT SPACING TO BE 6000mm
J. ALL CORNERS TO HAVE L–BAR WITH 500mm LEGS TOP AND BOTTOM.
K. ALL EXPOSED SLABS TO BE WATERPROOFED WITH APPROVED SYSTEMS.
L. ALL WATERPROOFING TO BE CARRIED OUT IN ACCORDANCE WITH BCA REQUIREMENTS .
M. FOLLOW PIERS ARRANGEMENT AS SHOWN IN THE PLAN WHEN 150KPA NOT ACHIEVABLE OR ROCK IS ENCOUNTERED IN PART OF THE FOUNDATION THEN ALL PIERS MUST BE FOUNDED ON ROCK

LOWER GROUND FLOOR FOOTING PLAN

SCALE: 1:100

REFER TO DRAWING NO.STR001 FOR LEGEND

NOTES:
450Ø REINFORCED CONCRETE PIERS

A. DRAWING TO BE READ IN CONJUNCTION WITH ARCHITECTURE DRAWINGS .
B. REFER TO ARCHITECTURAL DRAWINGS FOR ALL SETOUT, LEVELS, STEPS, FOLDS & FALLS ETC.
C. REFER TO STORMWATER DRAINAGE DRAWINGS FOR LOCATION OF PUMP WELL AND SUMP PITS.
D. ASSUMED SITE IN ACCORDANCE WITH AS2870 CLASS M – GEOTECH TO CONFIRM.
E. SAFE BEARING CAPACITY HAS BEEN ASSUMED TO BE A MIN. OF 200 kPa TO BE BEARING ON STIFF CLAY.
F. GEOTECHNICAL ENGINEER TO VERIFY THE SAFE BEARING CAPACITY OF FOUNDATION MATERIAL PRIOR TO CONSTRUCTION.
G. CONCRETE PIER (f'c)=32 MPa. FOR SALINITY FOR SOIL OTHERWISE 25MPa WITH A SLUMP OF 80MM.
H. MASS CONCRETE PIERS AVERAGE BEARING DEPTH TO BE 1.0m INTO NATURAL UNDISTURBED STIFF CLAY WITH A SAFE BEARING CAPACITY OF AT LEAST 200kPa.

AGGREGATE MINIMUM SIZE 20MM.

DRIVEWAY SLAB ON GROUND [S1]:

A. 140 THICK SLAB, SL82 FABRIC TOP.
B. POUR DRIVEWAY SLABS ON 100 COMPACTED CRUSHED ROCK.
C. ALL CONCRETE TO BE PLACED BY PUMPING AND COMPACTED WITH A VIBRATOR.
D. MAX 6m SAWN CONTROL JOINT.
E. MAX 15m KEYED CONSTRUCTION JOINT.
F. MAX 30m EXPANSION JOINT.

SOIL SALINITY

A. A LAYER OF SAND MINIMUM 50MM THICK MUST BE LAID BEFORE POURING SLAB.
B. A DAMP–PROOF MEMBRANE (RATHER THAN A VAPOR PROOF MEMBRANE) MUST BE LAID UNDER THE SLAB (BCA 3.2.2.6).
C. THE DAMP PROOF MEMBRANE MUST BE EXTENDED TO THE OUTSIDE FACE OF THE EXTERNAL EDGE BEAM UP TO THE FINISHED GROUND LEVEL.
D. CLASS 32 MPA CONCRETE MUST BE USED OR A SULPHATE RESISTING TYPE SR CEMENT WITH A WATER CEMENT RATIO OF 0.5 MUST BE USED, FOR BOTH CONCRETE SLAB AND PIERS.
E. SLABS MUST BE VIBRATED AND CURED FOR A MINIMUM OF SEVEN DAYS.
F. MINIMUM COVER TO REINFORCEMENT MUST BE 45MM FROM MEMBRANE IN CONTACT WITH GROUND.
G. ADMIXTURES FOR WATER PROOFING AND CORROSION PREVENTION MAY BE USED.

PRINT IN COLOUR

MODULAR ENGINEERS P/L
Structural Engineering | Civil Engineering
Stormwater Engineering | Flood Engineering
Traffic Engineering | Temporary works
ABN : 66 646 960 929
TEL. : 02 873 08473
MOB. : 04 208 98999
EMAIL : info@modularengineers.com.au
WEBSITE : www.modularengineers.com.au
ADDRESS : 6/7 Parkes St., Parramatta NSW 2150

ARCHITECT:
GEGE CONSTRUCTION PTY LTD

PROJECT TITLE :
PROPOSED DUAL OCCUPANCY

SHEET NAME :
LOWER GROUND FOOTING & SLAB PLAN

PROJECT NUMBER:
STR0162-2025

INTERNAL REVISIONS :

ISSUE	DATE	DESCRIPTION	BY
J	31-08-26	ISSUED FOR CDC	M.J.
I	18-08-26	ISSUED FOR CDC	M.J.
H	12-06-26	ISSUED FOR CDC	M.J.
G	12-06-26	ISSUED FOR CDC	M.J.
F	14-05-26	ISSUED FOR CDC	M.J.
E	05-03-26	ISSUED FOR CDC	M.J.
D	13-02-26	ISSUED FOR CDC	M.J.
C	08-12-25	ISSUED FOR CDC	M.J.

AMENDMENTS

DRAWN : M.J. DATE: 31-08-26
DESIGNED : J.M. REVISION DATE:
QA CHECK : J.M. 31-08-26

APPROVED BY :

ALI AL - OBAIDI
MSc, BSc, MIEAust, CPEng, NER
RPEQ: 28316
NPER: 5358554

ISSUE TYPE :
CDC

SHEET NUMBER :
STR003

SHEET SIZE: A3
REVISION: J

NOTE: THE DESIGN AND DETAILS SHOWN ON THESE DRAWINGS ARE APPLICABLE TO THIS PROJECT ONLY AND MAY NOT BE REPRODUCED IN WHOLE OR IN PART OR BE USED FOR ANY OTHER PROJECT OR PURPOSE WITHOUT THE WRITTEN PERMISSION OF MODULAR ENGINEERS WITH WHOM COPYRIGHT RESIDES.

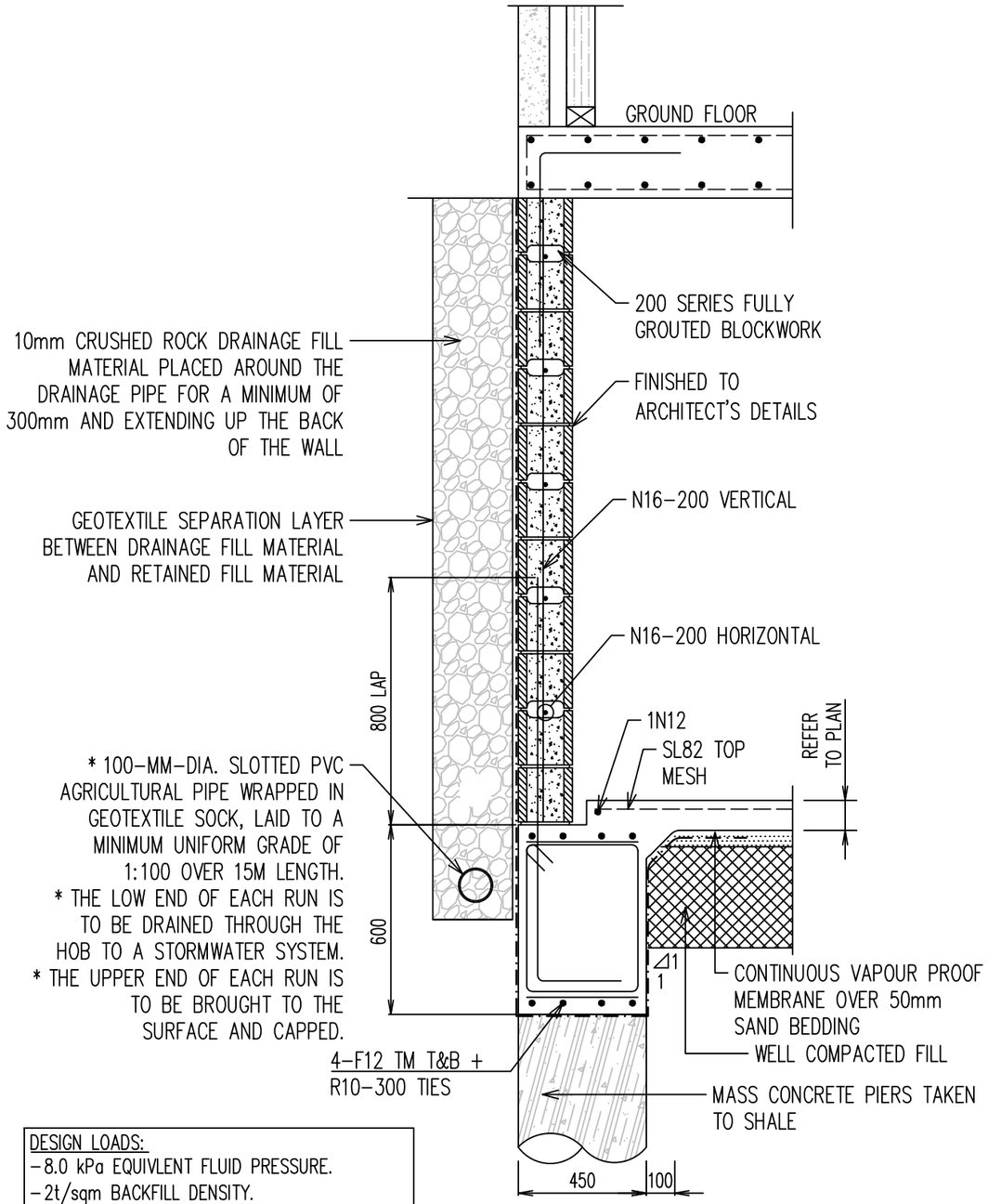

DESIGN LOADS:
- 8.0 kPa EQUIVLENT FLUID PRESSURE.
- 2t/sqm BACKFILL DENSITY.
- MAX 1:4 SLOPE BEHIND WALL.
- MIN. ALLOWABLE BEARING CAPACITY 100 kPa.

EXTERNAL FOOTING BEAM (EB1)

SCALE 1:20

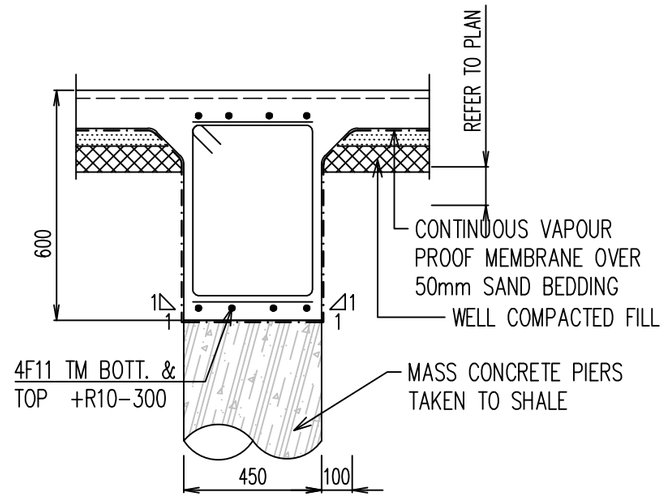

INTERNAL FOOTING BEAM (IB1)

SCALE 1:20

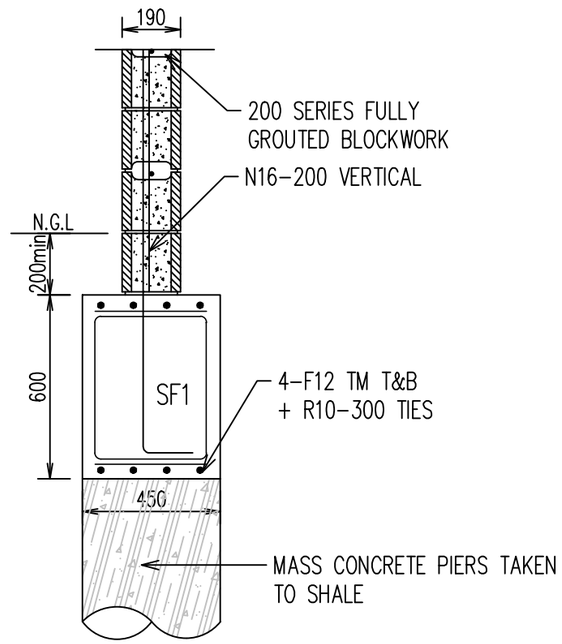

STRIP FOOTING (SF1)

SCALE 1:20

PRINT IN COLOUR

MODULAR ENGINEERS P/L

Structural Engineering | Civil Engineering
Stormwater Engineering | Flood Engineering
Traffic Engineering | Temporary works

ABN : 66 646 960 929
TEL. : 02 873 08473
MOB. : 04 208 98999
EMAIL : info@modularengineers.com.au
WEBSITE : www.modularengineers.com.au
ADDRESS : 6/7 Parkes St., Parramatta NSW 2150

ARCHITECT:
GEGE CONSTRUCTION PTY LTD

PROJECT TITLE :
PROPOSED DUAL OCCUPANCY

SHEET NAME :
SECTION AND DETAILS

PROJECT NUMBER:
STR0162-2025

INTERNAL REVISIONS :

ISSUE	DATE	DESCRIPTION	BY
J	31-08-26	ISSUED FOR CDC	M.J.
I	18-08-26	ISSUED FOR CDC	M.J.
H	12-06-26	ISSUED FOR CDC	M.J.
G	12-06-26	ISSUED FOR CDC	M.J.
F	14-05-26	ISSUED FOR CDC	M.J.
E	05-03-26	ISSUED FOR CDC	M.J.
D	13-02-26	ISSUED FOR CDC	M.J.
C	08-12-25	ISSUED FOR CDC	M.J.

AMENDMENTS

DRAWN : M.J. DATE: 31-08-26
DESIGNED : J.M. REVISION DATE:
QA CHECK : J.M. 31-08-26

APPROVED BY :

ALI AL - OBAIDI
MSc, BSc, MIEAust, CPEng, NER

RPEQ: 28316
NPER: 5358554

ISSUE TYPE :
CDC

SHEET NUMBER :
STR004

SHEET SIZE: A3
REVISION: J

NOTE: THE DESIGN AND DETAILS SHOWN ON THESE DRAWINGS ARE APPLICABLE TO THIS PROJECT ONLY AND MAY NOT BE REPRODUCED IN WHOLE OR IN PART OR BE USED FOR ANY OTHER PROJECT OR PURPOSE WITHOUT THE WRITTEN PERMISSION OF MODULAR ENGINEERS WITH WHOM COPYRIGHT RESIDES.

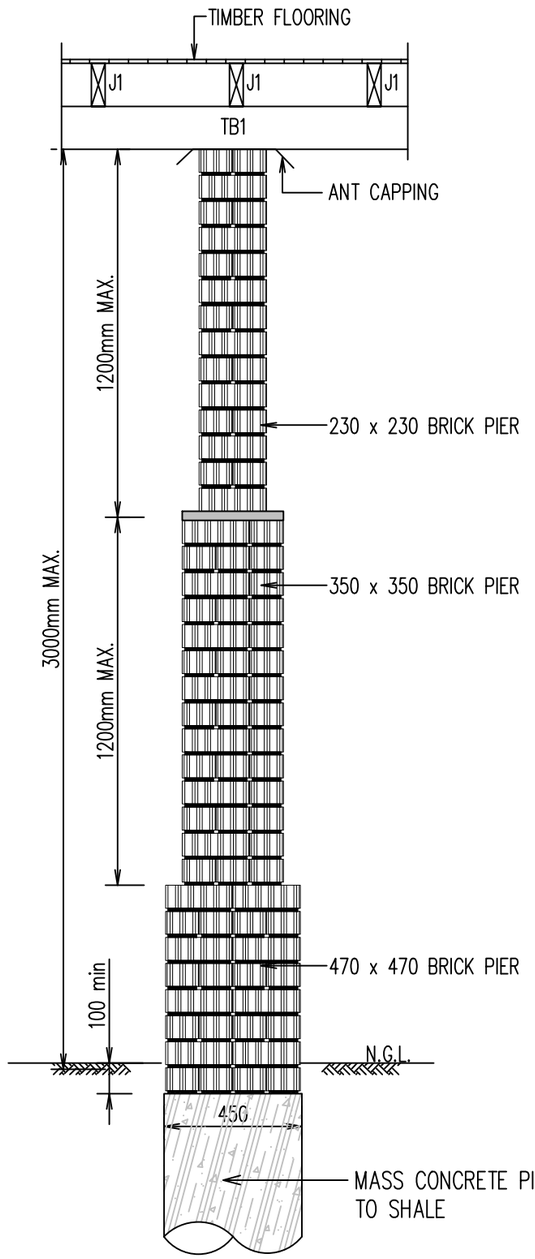

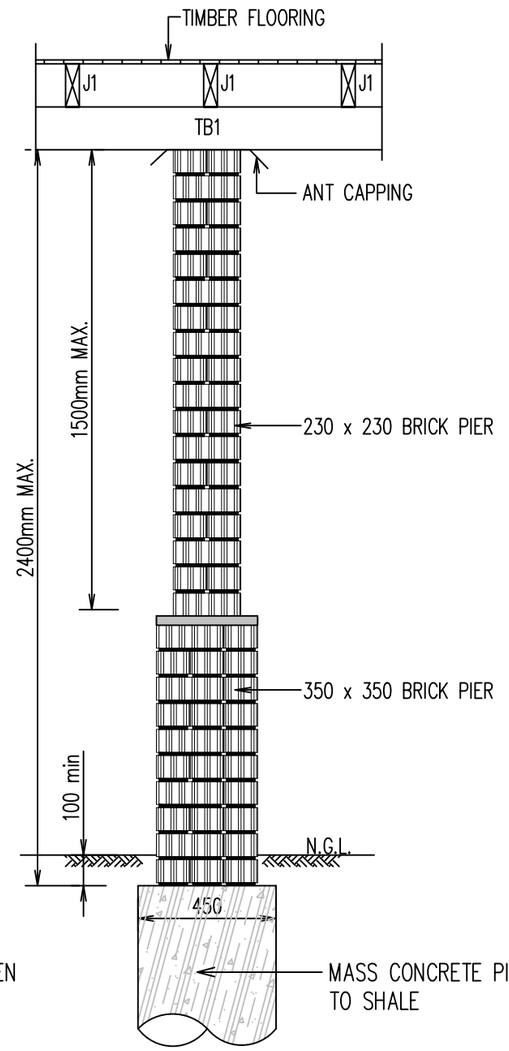

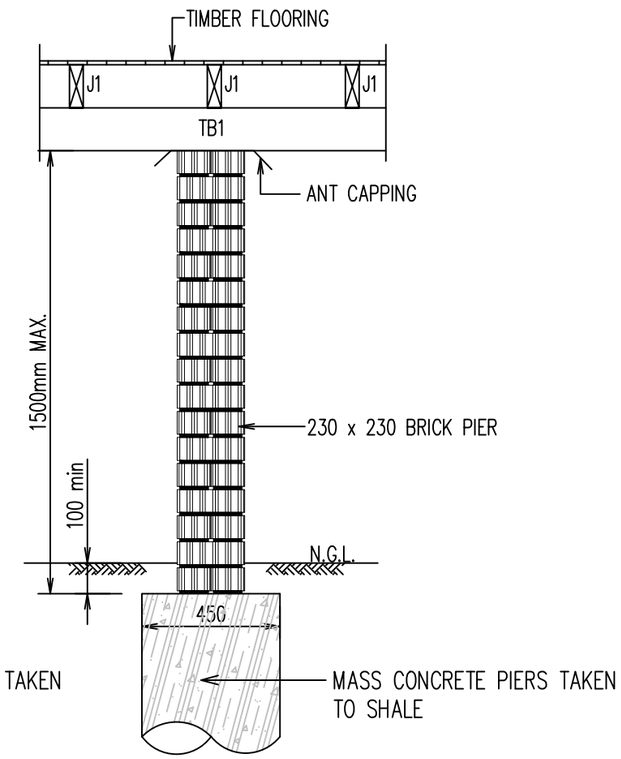

SUB-FLOOR ISOLATED PIERS - (MAXIMUM HEIGHT AND SECTIONAL DETAIL)

SCALE 1:20

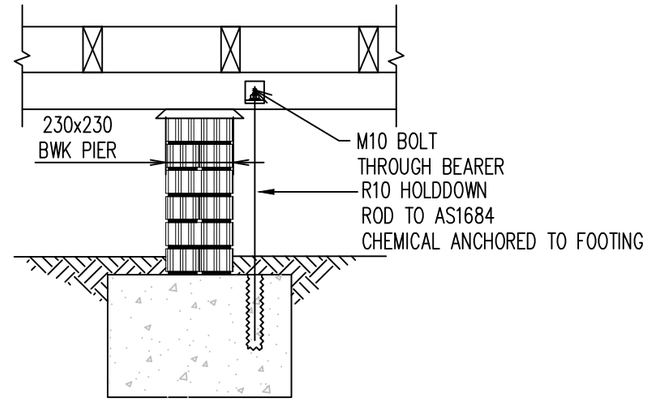

TYPICAL HOLD-DOWN DETAIL

PRINT IN COLOUR

MODULAR ENGINEERS P/L

Structural Engineering | Civil Engineering
Stormwater Engineering | Flood Engineering
Traffic Engineering | Temporary works

ABN : 66 646 960 929
TEL. : 02 873 08473
MOB. : 04 208 98999
EMAIL : info@modularengineers.com.au
WEBSITE : www.modularengineers.com.au
ADDRESS : 6/7 Parkes St., Parramatta NSW 2150

ARCHITECT:
GEGE CONSTRUCTION PTY LTD

PROJECT TITLE :
PROPOSED DUAL OCCUPANCY

SHEET NAME :
SECTION AND DETAILS

PROJECT NUMBER:
STR0162-2025

INTERNAL REVISIONS :

ISSUE	DATE	DESCRIPTION	BY
J	31-08-26	ISSUED FOR CDC	M.J.
I	18-08-26	ISSUED FOR CDC	M.J.
H	12-06-26	ISSUED FOR CDC	M.J.
G	12-06-26	ISSUED FOR CDC	M.J.
F	14-05-26	ISSUED FOR CDC	M.J.
E	05-03-26	ISSUED FOR CDC	M.J.
D	13-02-26	ISSUED FOR CDC	M.J.
C	08-12-25	ISSUED FOR CDC	M.J.

AMENDMENTS

DRAWN : M.J. DATE: 31-08-26
DESIGNED : J.M. REVISION DATE:
QA CHECK : J.M. 31-08-26

APPROVED BY :

ALI AL - OBAIDI
MSc, BSc, MIEAust, CPEng, NER

RPEQ: 28316
NPER: 5358554

ISSUE TYPE :
CDC

SHEET NUMBER :
STR005

SHEET SIZE: A3
REVISION: J

NOTE: THE DESIGN AND DETAILS SHOWN ON THESE DRAWINGS ARE APPLICABLE TO THIS PROJECT ONLY AND MAY NOT BE REPRODUCED IN WHOLE OR IN PART OR BE USED FOR ANY OTHER PROJECT OR PURPOSE WITHOUT THE WRITTEN PERMISSION OF MODULAR ENGINEERS WITH WHOM COPYRIGHT RESIDES.

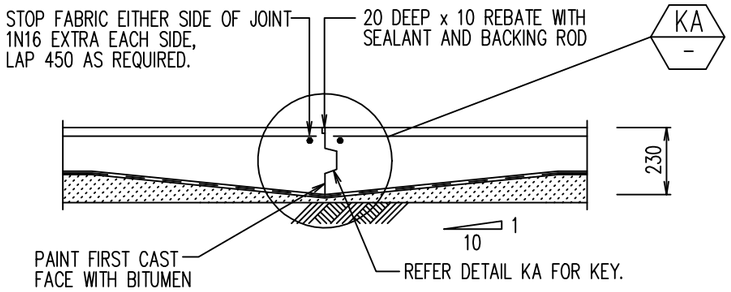

K.J. – KEYED CONSTRUCTION JOINT

SCALE 1:20 CARPARK AND OFFICE FLOORS

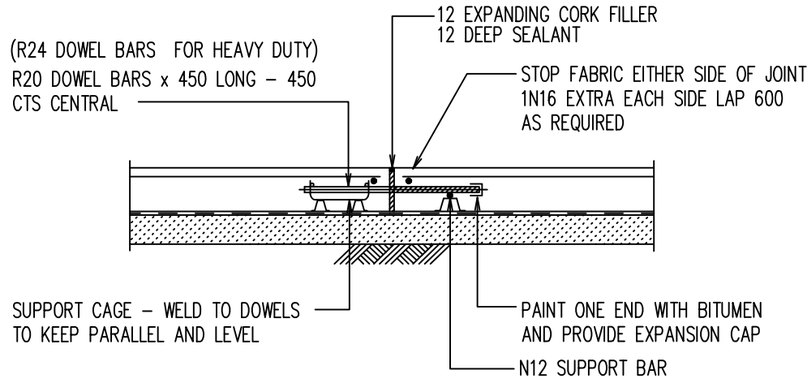

E.J. – EXPANSION JOINT

SCALE 1:20

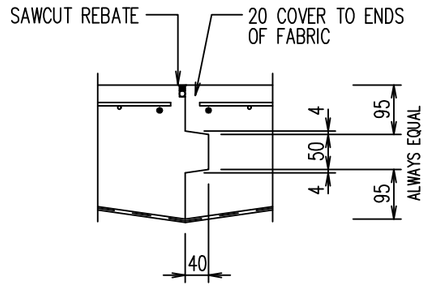

DETAIL KA

SCALE 1:10

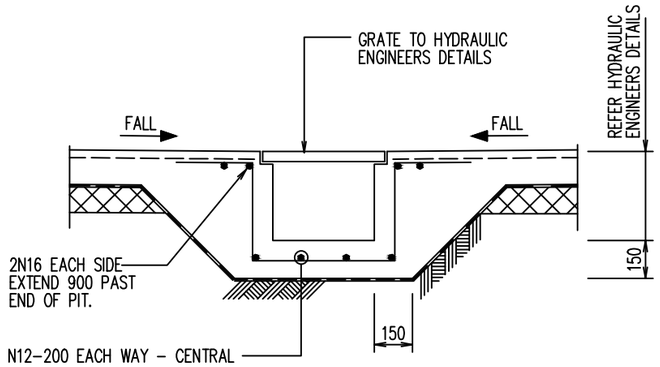

TYPICAL PIT DETAIL FW

SCALE 1:20

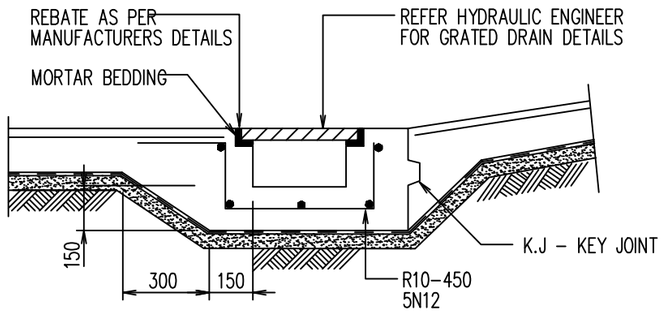

TYPICAL GRATED DRAIN DETAIL

SCALE 1:20

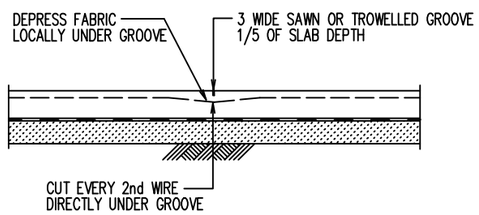

S.J. – SAWN CONTROL JOINT

SCALE 1:20

NOTE: SAWCUT TO BE MADE WITHIN 16 HOURS OF CASTING SLAB

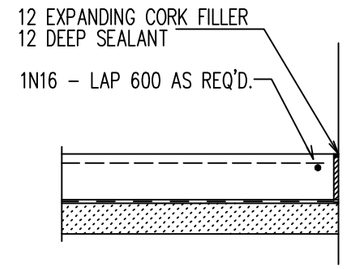

EDGE OF SLAB

SCALE 1:20

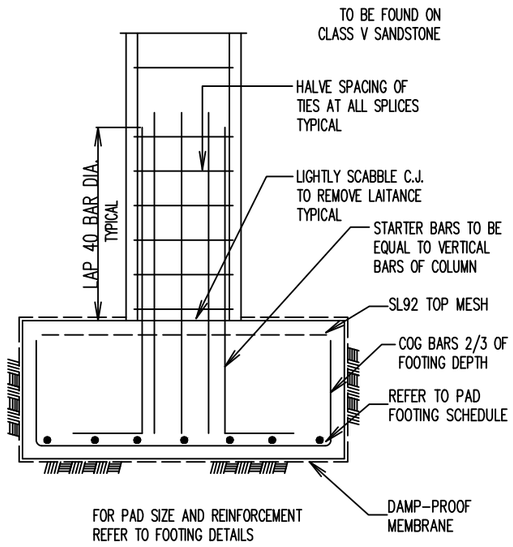

TYPICAL PAD FOOTING DETAIL WITH CONCRETE COLUMN

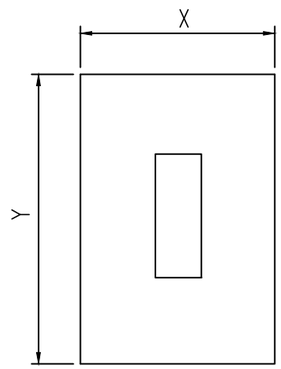

TYPICAL PAD FOOTING PLAN

PRINT IN COLOUR

MODULAR ENGINEERS P/L

Structural Engineering | Civil Engineering
Stormwater Engineering | Flood Engineering
Traffic Engineering | Temporary works

ABN : 66 646 960 929
TEL. : 02 873 08473
MOB. : 04 208 98999
EMAIL : info@modularengineers.com.au
WEBSITE : www.modularengineers.com.au
ADDRESS : 6/7 Parkes St., Parramatta NSW 2150

ARCHITECT:
GEGE CONSTRUCTION PTY LTD

PROJECT TITLE :
PROPOSED DUAL OCCUPANCY

SHEET NAME :
SECTION AND DETAILS

PROJECT NUMBER:
STR0162-2025

INTERNAL REVISIONS :

ISSUE	DATE	DESCRIPTION	BY
J	31-08-26	ISSUED FOR CDC	M.J.
I	18-08-26	ISSUED FOR CDC	M.J.
H	12-06-26	ISSUED FOR CDC	M.J.
G	12-06-26	ISSUED FOR CDC	M.J.
F	14-05-26	ISSUED FOR CDC	M.J.
E	05-03-26	ISSUED FOR CDC	M.J.
D	13-02-26	ISSUED FOR CDC	M.J.
C	08-12-25	ISSUED FOR CDC	M.J.

AMENDMENTS

DRAWN : M.J. DATE: 31-08-26
DESIGNED : J.M. REVISION DATE:
QA CHECK : J.M. 31-08-26

APPROVED BY :

ALI AL - OBAIDI
MSc, BSc, MIEAust, CPEng, NER

RPEQ: 28316
NPER: 5358554

ISSUE TYPE :
CDC

SHEET NUMBER :
STR006

SHEET SIZE: **A3**
REVISION: **J**

NOTE: THE DESIGN AND DETAILS SHOWN ON THESE DRAWINGS ARE APPLICABLE TO THIS PROJECT ONLY AND MAY NOT BE REPRODUCED IN WHOLE OR IN PART OR BE USED FOR ANY OTHER PROJECT OR PURPOSE WITHOUT THE WRITTEN PERMISSION OF MODULAR ENGINEERS WITH WHOM COPYRIGHT RESIDES.

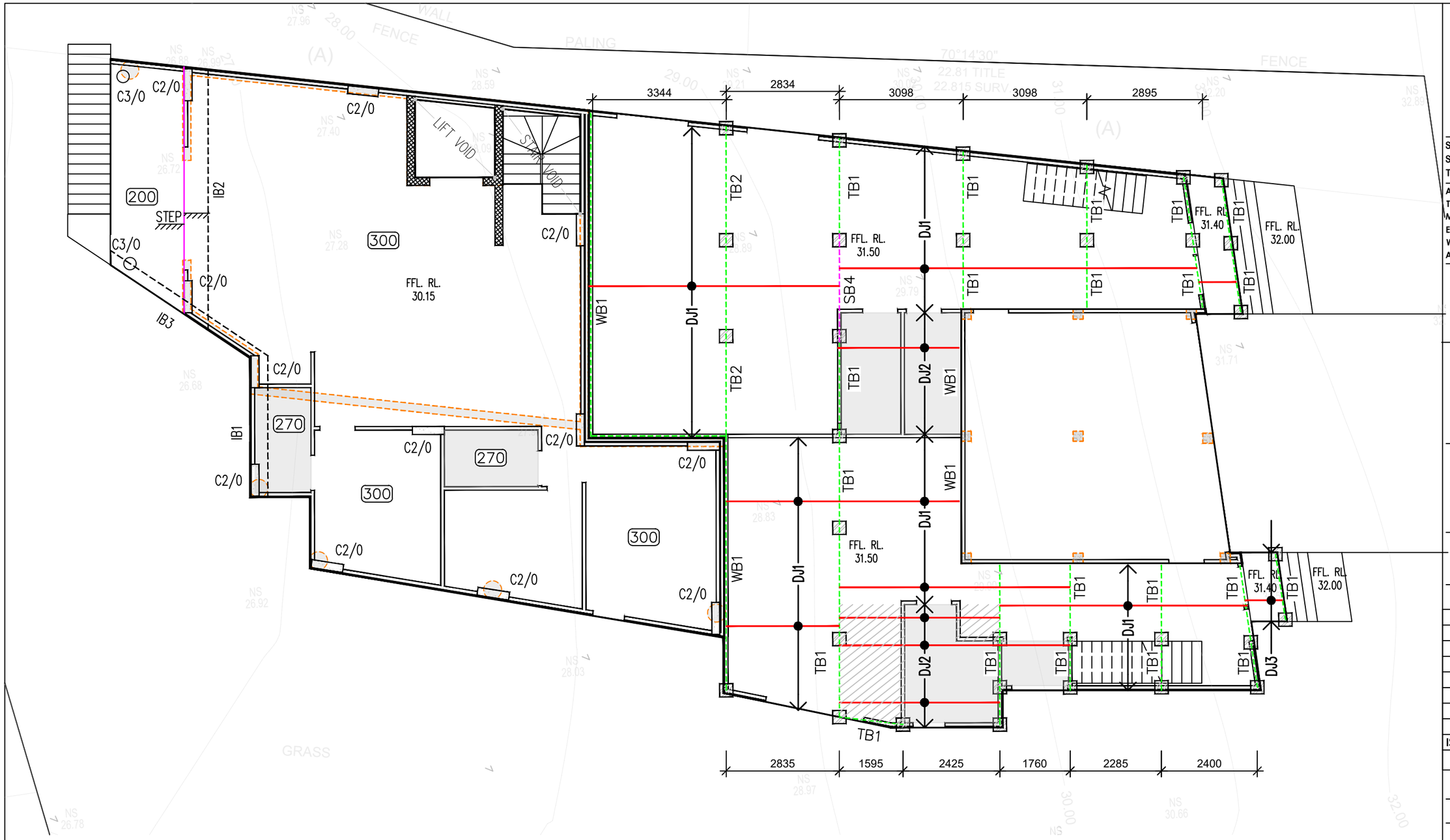

GROUND FLOOR SLAB PLAN

SCALE: 1:100

REFER TO DRAWING NO.STR001 FOR LEGEND

BEAM SCHDULE			
MARK	SIZE (WxD) mm	REINFORCEMENT	f'c
1B1	450W x 500D	4N20 TOP & BOTTOM +R10@300 TIES	32MPa
1B2	600W x 300D	5N20 TOP & BOTTOM +R10@300 TIES	32MPa
1B3	700W x 500D (UPTURN BEAM)	6N16 TOP & BOTTOM +R10@300 TIES	32MPa

MEMBER SCHEDULE		
TB1	2/240 x 45 LVL	TIMBER FLOOR BEARER
DJ1	240 X 45 LVL	TIMBER FLOOR JOISTS AT 450 MAX. CTS.
DJ2	200 x 45 LVL	TIMBER WET AREA JOISTS AT 300 MAX. CTS.
WB1	200 x 45 LVL	WALL PLATE
SB4	250 PFC	STEEL BEAM TO AS 4100

NOTE:
a) REFER TO ARCHITECTS DRAWINGS FOR ROOF PITCHES.
b) ALL DIMENSIONS AND LEVELS ARE TO BE CONFIRMED BY ARCHITECT AND SITE MEASURED BY BUILDER BEFORE FABRICATION.

PRINT IN COLOUR

MODULAR ENGINEERS P/L

Structural Engineering | Civil Engineering
Stormwater Engineering | Flood Engineering
Traffic Engineering | Temporary works

ABN : 66 646 960 929
TEL. : 02 873 08473
MOB. : 04 208 98999
EMAIL : info@modularengineers.com.au
WEBSITE : www.modularengineers.com.au
ADDRESS : 6/7 Parkes St., Parramatta NSW 2150

ARCHITECT:
GEGE CONSTRUCTION PTY LTD

PROJECT TITLE :
PROPOSED DUAL OCCUPANCY

SHEET NAME :
GROUND FLOOR SUSPENDED CONCRETE SLAB PLAN

PROJECT NUMBER:
STR0162-2025

INTERNAL REVISIONS :

ISSUE	DATE	DESCRIPTION	BY
J	31-08-26	ISSUED FOR CDC	M.J.
I	18-08-26	ISSUED FOR CDC	M.J.
H	12-06-26	ISSUED FOR CDC	M.J.
G	12-06-26	ISSUED FOR CDC	M.J.
F	14-05-26	ISSUED FOR CDC	M.J.
E	05-03-26	ISSUED FOR CDC	M.J.
D	13-02-26	ISSUED FOR CDC	M.J.
C	08-12-25	ISSUED FOR CDC	M.J.

AMENDMENTS

DRAWN : M.J. DATE: 31-08-26
DESIGNED : J.M. REVISION DATE:
QA CHECK : J.M. 31-08-26

APPROVED BY :

ALI AL - OBAIDI
MSc, BSc, MIEAust, CPEng, NER

RPEQ: 28316
NPER: 5358554

ISSUE TYPE :
CDC

SHEET NUMBER :
STR007

SHEET SIZE: A3
REVISION: J

NOTE: THE DESIGN AND DETAILS SHOWN ON THESE DRAWINGS ARE APPLICABLE TO THIS PROJECT ONLY AND MAY NOT BE REPRODUCED IN WHOLE OR IN PART OR BE USED FOR ANY OTHER PROJECT OR PURPOSE WITHOUT THE WRITTEN PERMISSION OF MODULAR ENGINEERS WITH WHOM COPYRIGHT RESIDES.

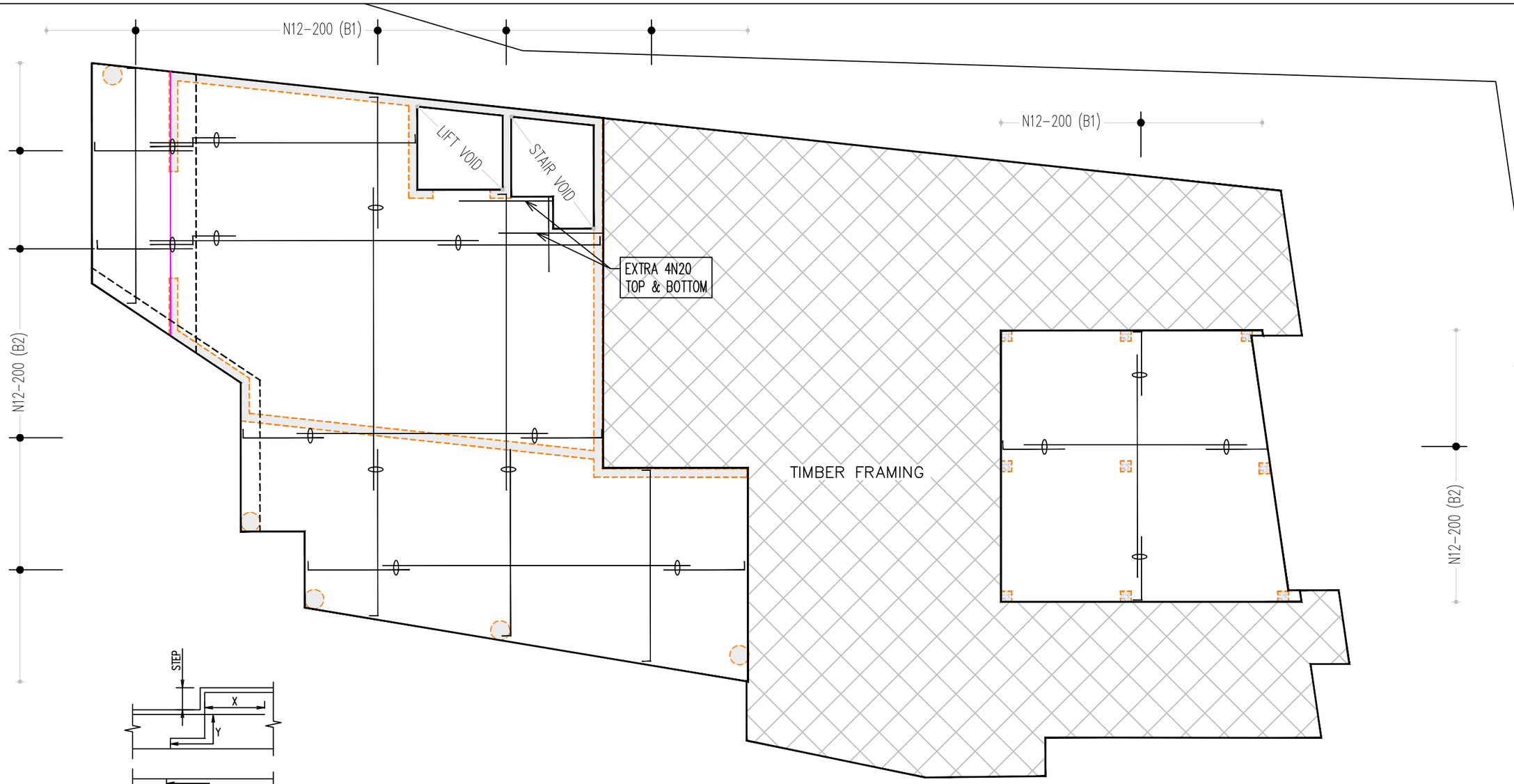

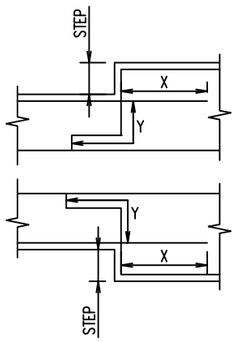

TYPICAL REINFORCEMENT LAPPING
N.T.S.

GROUND FLOOR – BOTTOM REINFORCEMENT PLAN

SCALE: 1:100

REFER TO DRAWING NO.STR001 FOR LEGEND

NOTES:
SUSPENDED SLAB

A. DRAWING TO BE READ IN CONJUNCTION WITH ARCHITECTURE DRAWINGS .
B. REFER TO ARCHITECTURAL DRAWINGS FOR ALL SETOUT, LEVELS, STEPS, FOLDS & FALLS ETC.
C. REFER TO STORMWATER DRAINAGE DRAWINGS FOR LOCATION OF PUMP WELL AND SUMP PITS.
C. ALL CONCRETE CYLINDERS TO BE STORED AND CURED ON SITE PRIOR TESTING TO AS3600.
D. CONCRETE SLAB (f'c)=32 MPa WITH A SLUMP OF 80MM.
E. AGGREGATE MINIMUM SIZE 20MM.
F. ALL BRICKS WALLS TO BE ARTICULATED, EXPANSION JOINT SPACING TO BE 6000mm
G. ALL EXPOSED SLABS TO BE WATERPROOFED WITH APPROVED SYSTEMS.
H. ACOUSTIC ENGINEER TO CHECK AND VERIFY ALL FLOOR SLAB FOR ACOUSTIC REQUIREMENTS IN ACCORDANCE WITH THE BCA REGULATIONS AND ADVISE ON ANY ACOUSTIC TREATMENT NEEDED TO SATISFY THE REGULATION.
I. FOR FOLD REINFORCEMENTS REFER TO SECTION S4 U.N.O.
J. ENSURE 50mm MINIMUM SPACING BETWEEN BARS.
K. PROVIDE ALL EXTRA REINFORCEMENT AS SHOWN ON PLAN.
L. PROVIDE 3N16 TOP AND BOTTOM AT THE PERIMETER OF THE SLAB.
M. SLAB REINFORCEMENT LAYING SEQUENCE U.N.O.:

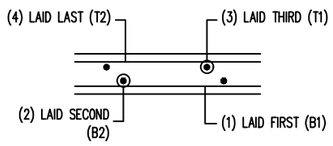

N. TYPICAL TRIMMERS AT PENETRATION DETAIL:

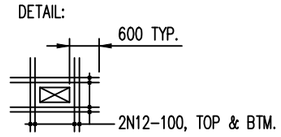

O. TYPICAL TRIMMERS AT RE-ENTRANT CORNERS:

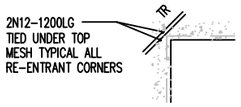

G. PROVIDE TOP & BOTTOM BARS ON ALL WALL OPENINGS AS PER THE SCHEDULE BELOW:

LENGTH OF OPENING (m)	BOTTOM BAR	TOP BAR
1.0 – 1.8	2N16	2N16
1.8 – 2.5	2N20	2N20
2.5 – 3.5	2N24	2N24

H. PROVIDE ADEQUATE OVERLAP AT MESH JOINTS AS FOLLOWS :
400 MIN. LAP FOR SL82 MESH
500 MIN. LAP FOR SL92 MESH
600 MIN. LAP FOR SL102 MESH

I. PROVIDE ADEQUATE OVERLAP FOR BARS AS FOLLOWS:

BAR(X–Y)	MIN LAPPING REQUIRED
N12	500 mm
N16	800 mm
N20	1000 mm
N24	1200 mm
N28	1400 mm

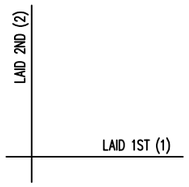

BAR LAYING SEQUENCE
U.N.O.

PRINT IN COLOUR

MODULAR ENGINEERS P/L
Structural Engineering | Civil Engineering
Stormwater Engineering | Flood Engineering
Traffic Engineering | Temporary works
ABN : 66 646 960 929
TEL. : 02 873 08473
MOB. : 04 208 98999
EMAIL : info@modularengineers.com.au
WEBSITE : www.modularengineers.com.au
ADDRESS : 6/7 Parkes St., Parramatta NSW 2150

ARCHITECT:
GEGE CONSTRUCTION PTY LTD

PROJECT TITLE :
PROPOSED DUAL OCCUPANCY

SHEET NAME :
GROUND FLOOR - BOTTOM REINFORCEMENT PLAN

PROJECT NUMBER:
STR0162-2025

INTERNAL REVISIONS :

ISSUE	DATE	DESCRIPTION	BY
J	31-08-26	ISSUED FOR CDC	M.J.
I	18-08-26	ISSUED FOR CDC	M.J.
H	12-06-26	ISSUED FOR CDC	M.J.
G	12-06-26	ISSUED FOR CDC	M.J.
F	14-05-26	ISSUED FOR CDC	M.J.
E	05-03-26	ISSUED FOR CDC	M.J.
D	13-02-26	ISSUED FOR CDC	M.J.
C	08-12-25	ISSUED FOR CDC	M.J.

AMENDMENTS

DRAWN : M.J. DATE: 31-08-26
DESIGNED : J.M. REVISION DATE:
QA CHECK : J.M. 31-08-26
APPROVED BY :

ALI AL - OBAIDI
MSc, BSc, MIEAust, CPEng, NER
RPEQ: 28316
NPER: 5358554

ISSUE TYPE :
CDC

SHEET NUMBER :
STR008

SHEET SIZE: A3
REVISION: J

NOTE: THE DESIGN AND DETAILS SHOWN ON THESE DRAWINGS ARE APPLICABLE TO THIS PROJECT ONLY AND MAY NOT BE REPRODUCED IN WHOLE OR IN PART OR BE USED FOR ANY OTHER PROJECT OR PURPOSE WITHOUT THE WRITTEN PERMISSION OF MODULAR ENGINEERS WITH WHOM COPYRIGHT RESIDES.

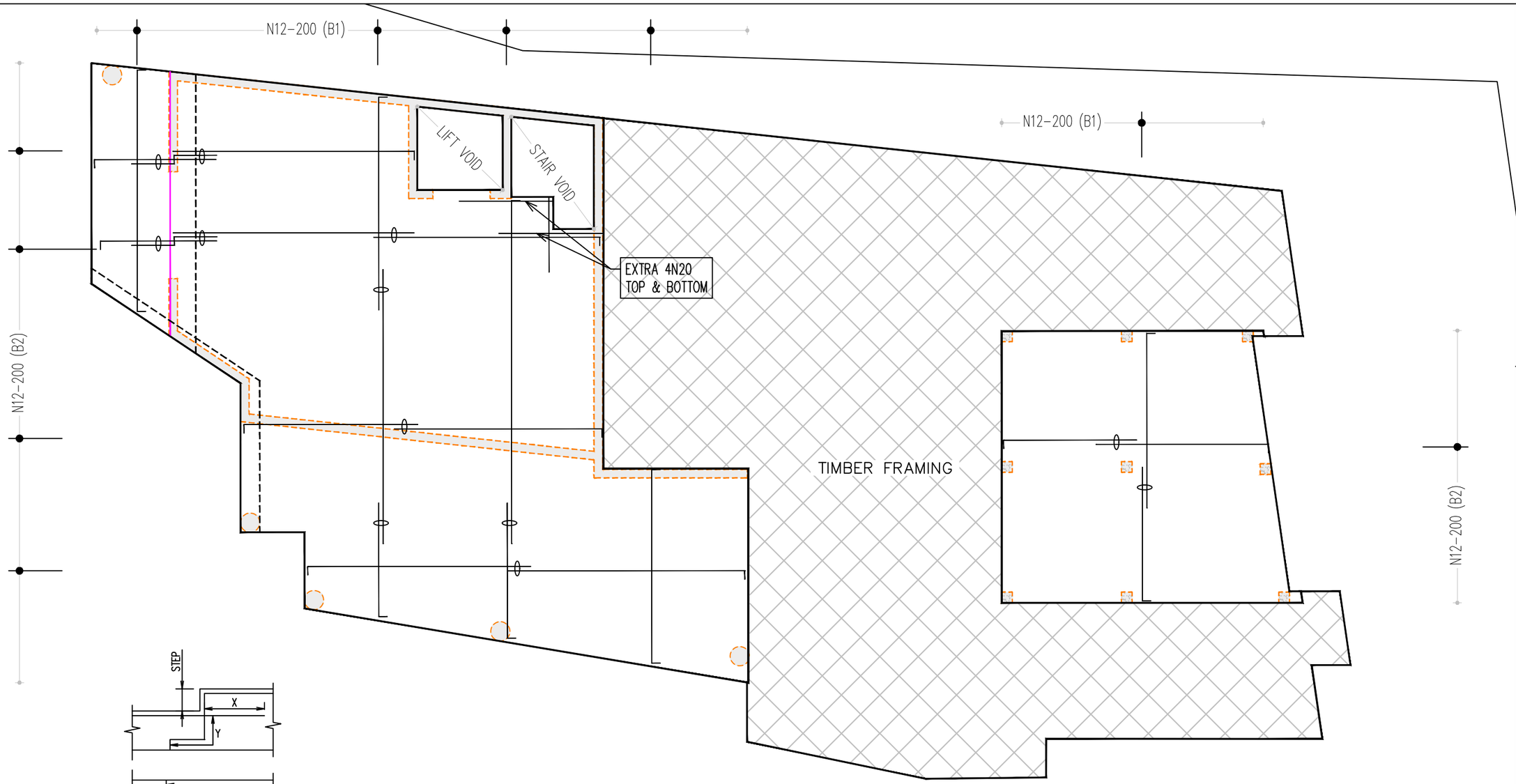

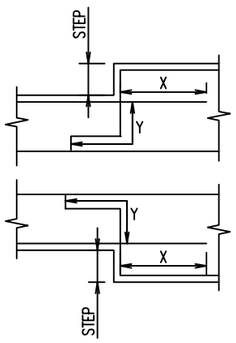

TYPICAL REINFORCEMENT LAPPING
N.T.S.

GROUND FLOOR – BOTTOM REINFORCEMENT PLAN

SCALE: 1:100

REFER TO DRAWING NO.STR001 FOR LEGEND

NOTES:
SUSPENDED SLAB

A. DRAWING TO BE READ IN CONJUNCTION WITH ARCHITECTURE DRAWINGS .
B. REFER TO ARCHITECTURAL DRAWINGS FOR ALL SETOUT, LEVELS, STEPS, FOLDS & FALLS ETC.
C. REFER TO STORMWATER DRAINAGE DRAWINGS FOR LOCATION OF PUMP WELL AND SUMP PITS.
C. ALL CONCRETE CYLINDERS TO BE STORED AND CURED ON SITE PRIOR TESTING TO AS3600.
D. CONCRETE SLAB (f'c)=32 MPa WITH A SLUMP OF 80MM.
E. AGGREGATE MINIMUM SIZE 20MM.
F. ALL BRICKS WALLS TO BE ARTICULATED, EXPANSION JOINT SPACING TO BE 6000mm
G. ALL EXPOSED SLABS TO BE WATERPROOFED WITH APPROVED SYSTEMS.
H. ACOUSTIC ENGINEER TO CHECK AND VERIFY ALL FLOOR SLAB FOR ACOUSTIC REQUIREMENTS IN ACCORDANCE WITH THE BCA REGULATIONS AND ADVISE ON ANY ACOUSTIC TREATMENT NEEDED TO SATISFY THE REGULATION.
I. FOR FOLD REINFORCEMENTS REFER TO SECTION S4 U.N.O.
J. ENSURE 50mm MINIMUM SPACING BETWEEN BARS.
K. PROVIDE ALL EXTRA REINFORCEMENT AS SHOWN ON PLAN.
L. PROVIDE 3N16 TOP AND BOTTOM AT THE PERIMETER OF THE SLAB.
M. SLAB REINFORCEMENT LAYING SEQUENCE U.N.O.:

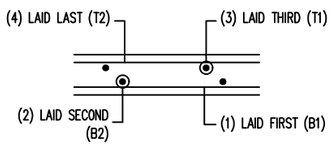

N. TYPICAL TRIMMERS AT PENETRATION DETAIL:

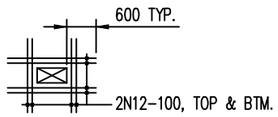

O. TYPICAL TRIMMERS AT RE-ENTRANT CORNERS:

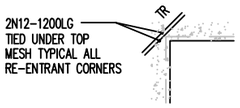

G. PROVIDE TOP & BOTTOM BARS ON ALL WALL OPENINGS AS PER THE SCHEDULE BELOW:

LENGTH OF OPENING (m)	BOTTOM BAR	TOP BAR
1.0 – 1.8	2N16	2N16
1.8 – 2.5	2N20	2N20
2.5 – 3.5	2N24	2N24

H. PROVIDE ADEQUATE OVERLAP AT MESH JOINTS AS FOLLOWS :
400 MIN. LAP FOR SL82 MESH
500 MIN. LAP FOR SL92 MESH
600 MIN. LAP FOR SL102 MESH

I. PROVIDE ADEQUATE OVERLAP FOR BARS AS FOLLOWS:

BAR(X-Y)	MIN LAPPING REQUIRED
N12	500 mm
N16	800 mm
N20	1000 mm
N24	1200 mm
N28	1400 mm

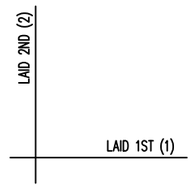

BAR LAYING SEQUENCE
U.N.O.

PRINT IN COLOUR

MODULAR ENGINEERS P/L
Structural Engineering | Civil Engineering
Stormwater Engineering | Flood Engineering
Traffic Engineering | Temporary works
ABN : 66 646 960 929
TEL. : 02 873 08473
MOB. : 04 208 98999
EMAIL : info@modularengineers.com.au
WEBSITE : www.modularengineers.com.au
ADDRESS : 6/7 Parkes St., Parramatta NSW 2150

ARCHITECT:
GEGE CONSTRUCTION PTY LTD

PROJECT TITLE :
PROPOSED DUAL OCCUPANCY

SHEET NAME :
GROUND FLOOR - TOP REINFORCEMENT PLAN

PROJECT NUMBER:
STR0162-2025

INTERNAL REVISIONS :

ISSUE	DATE	DESCRIPTION	BY
J	31-08-26	ISSUED FOR CDC	M.J.
I	18-08-26	ISSUED FOR CDC	M.J.
H	12-06-26	ISSUED FOR CDC	M.J.
G	12-06-26	ISSUED FOR CDC	M.J.
F	14-05-26	ISSUED FOR CDC	M.J.
E	05-03-26	ISSUED FOR CDC	M.J.
D	13-02-26	ISSUED FOR CDC	M.J.
C	08-12-25	ISSUED FOR CDC	M.J.

AMENDMENTS

DRAWN : M.J. DATE: 31-08-26
DESIGNED : J.M. REVISION DATE:
QA CHECK : J.M. 31-08-26
APPROVED BY :

ALI AL - OBAIDI
MSc, BSc, MIEAust, CPEng, NER
RPEQ: 28316
NPER: 5358554

ISSUE TYPE :
CDC

SHEET NUMBER :
STR009

SHEET SIZE: A3
REVISION: J

NOTE: THE DESIGN AND DETAILS SHOWN ON THESE DRAWINGS ARE APPLICABLE TO THIS PROJECT ONLY AND MAY NOT BE REPRODUCED IN WHOLE OR IN PART OR BE USED FOR ANY OTHER PROJECT OR PURPOSE WITHOUT THE WRITTEN PERMISSION OF MODULAR ENGINEERS WITH WHOM COPYRIGHT RESIDES.

COLUMN SCHEDULE

32 MPa	LEVEL 1	DETAIL NUMBER		3	3	
	GROUND	SIZE VERTICAL REINF. TIES and TYPE		800 x 250 12N16 TYPE A	DIA. 300 6N16 TYPE A	
		DETAIL NUMBER	3	4	4	3
	LOWER GROUND	SIZE VERTICAL REINF. TIES and TYPE	DIA. 450 6N16 TYPE A			250 x 250 6N16 TYPE A
		DETAIL NUMBER	1			1
F'c	STARTER BARS		6N16	12N16	6N16	6N16
	COLUMN LOADS (KN) (WORKING)		-	-	-	-
COLUMN MARK			C01	C02	C03	C04

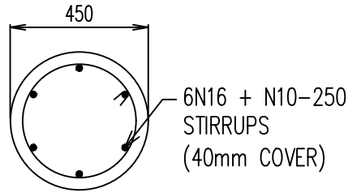

COLUMN DETAIL (C1)

SCALE 1:20

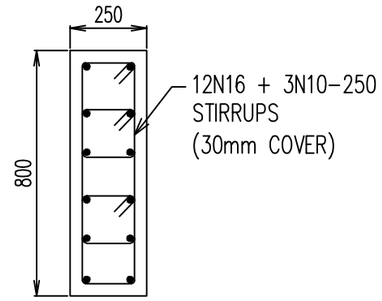

COLUMN DETAIL (C2)

SCALE 1:20

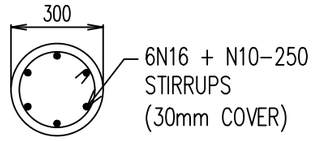

COLUMN DETAIL (C3)

SCALE 1:20

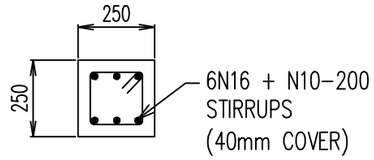

COLUMN DETAIL (C4)

SCALE 1:20

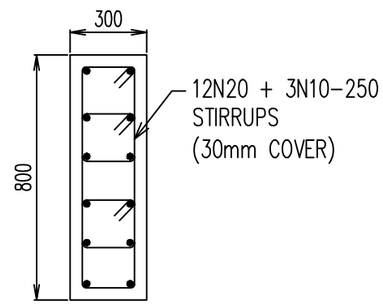

COLUMN DETAIL (C5)

SCALE 1:20

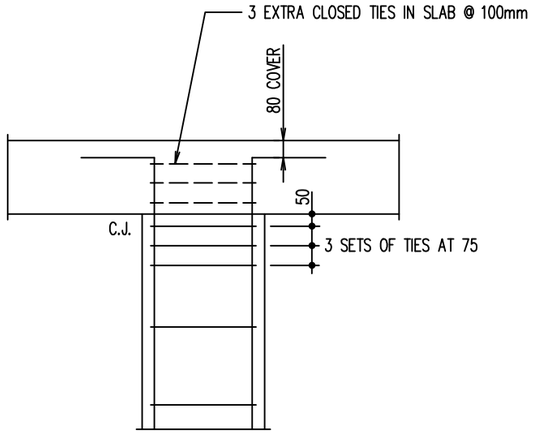

DETAIL 3

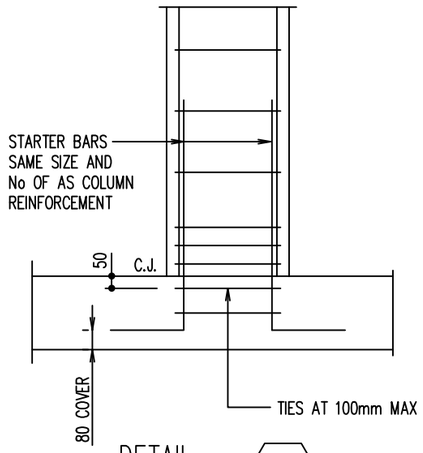

DETAIL 4

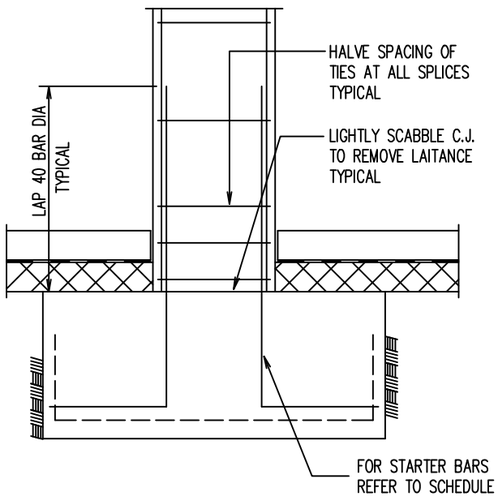

DETAIL 1

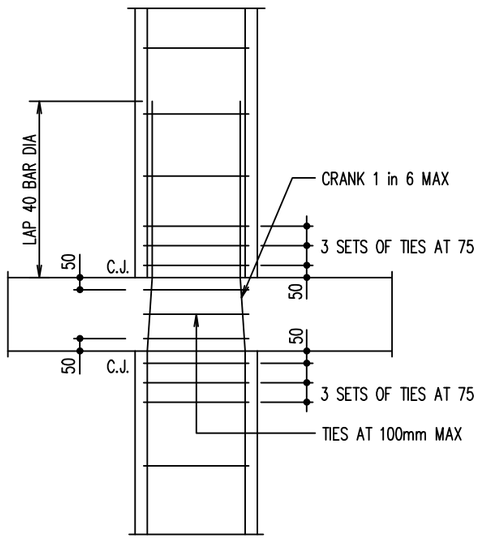

DETAIL 2

COLUMN TIES AND TYPES

NOTES:
COLUMNS

A. FOR GENERAL AND CONSTRUCTION NOTES REFER DRG. No. STR001.
B. PROVIDE CHAMFERS OR REBATES TO SQUARE AND RECTANGULAR COLUMNS AS REQUIRED BY THE ARCHITECT.
C. FOR CAST-IN COLUMN CORNER GUARDS REFER TO ARCHITECTURAL DRAWINGS.
D. STARTER BARS TO BE THE SAME SIZE AND NUMBER OFF AS COLUMN REINFORCEMENT THEY LAP WITH. STARTER BARS SHALL BE OFFSET SO AS TO ALLOW COLUMN BARS TO BE PROVIDED WITHOUT CRANK AS SHOWN ON COLUMN SCHEDULE. STARTER BAR COGS TO BE TIED TO BOTTOM REINFORCEMENT OF STRUCTURAL ELEMENTS THEY ARE CAST INTO (U.N.O.).
E. COG ALL COLUMN BARS 400 UNLESS NOTED OTHERWISE ON THE SCHEDULE.
F. TYPICAL LAP LENGTHS (U.N.O.)

BAR LAPS		
BAR SIZE	TENSION	COMPRESSION
N12	600mm	480mm
N16	800mm	640mm
N20	1000mm	800mm
N24	1200mm	960mm
N28	1400mm	1120mm
N32	1600mm	1280mm
N36	1800mm	1440mm

G. ONE TIE SHALL BE LOCATED NOT MORE THAN 50 mm VERTICALLY ABOVE THE TOP OF A FOOTING, OR THE TOP OF A SLAB IN ANY STOREY. ANOTHER TIE SHALL BE LOCATED NOT MORE THAN 50 mm VERTICALLY BELOW THE SOFFIT OF THE SLAB EXCEPT, THAT IN A COLUMN WITH A CAPITAL OR A DROP PANEL THE TIE SHALL BE LOCATED AT A LEVEL NOT MORE THAN 50 mm VERTICALLY ABOVE THE SOFFIT OF CAPITAL OR DROP PANEL. WHERE BEAMS FRAME FROM FOUR DIRECTIONS INTO A COLUMN AND ADEQUATELY RESTRAIN THE COLUMN FROM FOUR DIRECTIONS, THE TIE MAY BE TERMINATED 50 mm BELOW THE HIGHEST SOFFIT OF SUCH BEAMS.
H. WHERE A LONGITUDINAL BAR IS CRANKED TO FORM A LAP SPLICE:
   a) THE SLOPE OF THE INCLINED PART OF THE BAR IN RELATION TO THE AXIS SHALL NOT EXCEED 1 IN 6.
   b) THE PORTIONS OF THE BAR ON EITHER SIDE OF THE CRANK SHALL BE PARALLEL.
   c) REFER TO DETAIL FOR ADDITIONAL TIES AT CRANK POSITIONS.
   d) AMOUNT OF CRANK TO BE DETERMINED BY SCHEDULER.
   e) ALLOW FOR CHANGE IN COLUMN SIZE & LOCATION ABOVE.
I. LONGITUDINAL BAR HEIGHTS ARE NOT TO BE SCALED OFF STRUCTURAL COLUMN SCHEDULES. THEY ARE TO BE DETERMINED BY USING LEVELS AS SHOWN ON ARCHITECTURAL DRAWINGS.
J. DOWNPIPES SHALL NOT BE LOCATED WITHIN COLUMNS UNLESS NOTED ON THE COLUMN SCHEDULE.

PRINT IN COLOUR

MODULAR ENGINEERS P/L
Structural Engineering | Civil Engineering
Stormwater Engineering | Flood Engineering
Traffic Engineering | Temporary works
ABN : 66 646 960 929
TEL. : 02 873 08473
MOB. : 04 208 98999
EMAIL : info@modularengineers.com.au
WEBSITE : www.modularengineers.com.au
ADDRESS : 6/7 Parkes St., Parramatta NSW 2150

ARCHITECT:
GEGE CONSTRUCTION PTY LTD

PROJECT TITLE :
PROPOSED DUAL OCCUPANCY

SHEET NAME :
SECTION AND DETAILS

PROJECT NUMBER:
STR0162-2025

INTERNAL REVISIONS :

ISSUE	DATE	DESCRIPTION	BY
J	31-08-26	ISSUED FOR CDC	M.J.
I	18-08-26	ISSUED FOR CDC	M.J.
H	12-06-26	ISSUED FOR CDC	M.J.
G	12-06-26	ISSUED FOR CDC	M.J.
F	14-05-26	ISSUED FOR CDC	M.J.
E	05-03-26	ISSUED FOR CDC	M.J.
D	13-02-26	ISSUED FOR CDC	M.J.
C	08-12-25	ISSUED FOR CDC	M.J.

AMENDMENTS

DRAWN : M.J. DATE: 31-08-26
DESIGNED : J.M. REVISION DATE:
QA CHECK : J.M. 31-08-26

APPROVED BY :
ALI AL - OBAIDI
MSc, BSc, MIEAust, CPEng, NER
RPEQ: 28316
NPER: 5358554

ISSUE TYPE :
CDC

SHEET NUMBER :
STR010

SHEET SIZE: A3
REVISION: J

NOTE: THE DESIGN AND DETAILS SHOWN ON THESE DRAWINGS ARE APPLICABLE TO THIS PROJECT ONLY AND MAY NOT BE REPRODUCED IN WHOLE OR IN PART OR BE USED FOR ANY OTHER PROJECT OR PURPOSE WITHOUT THE WRITTEN PERMISSION OF MODULAR ENGINEERS WITH WHOM COPYRIGHT RESIDES.

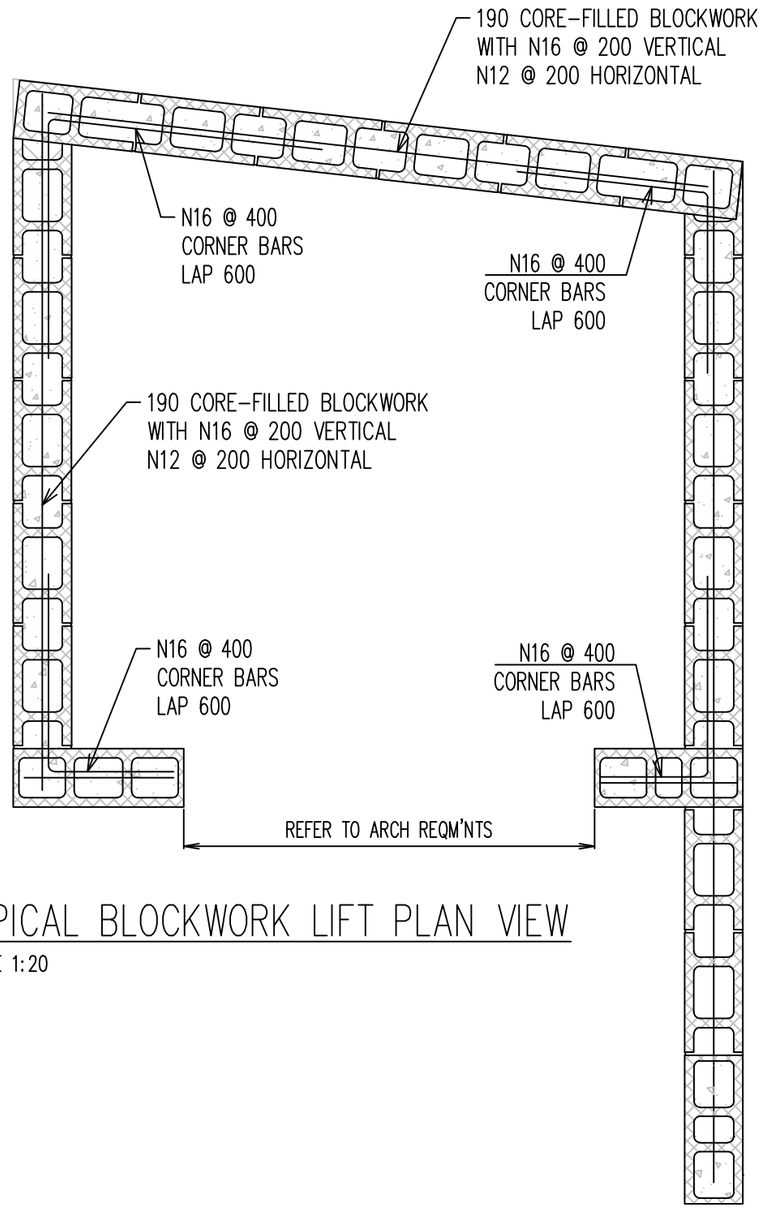

TYPICAL BLOCKWORK LIFT PLAN VIEW

SCALE 1:20

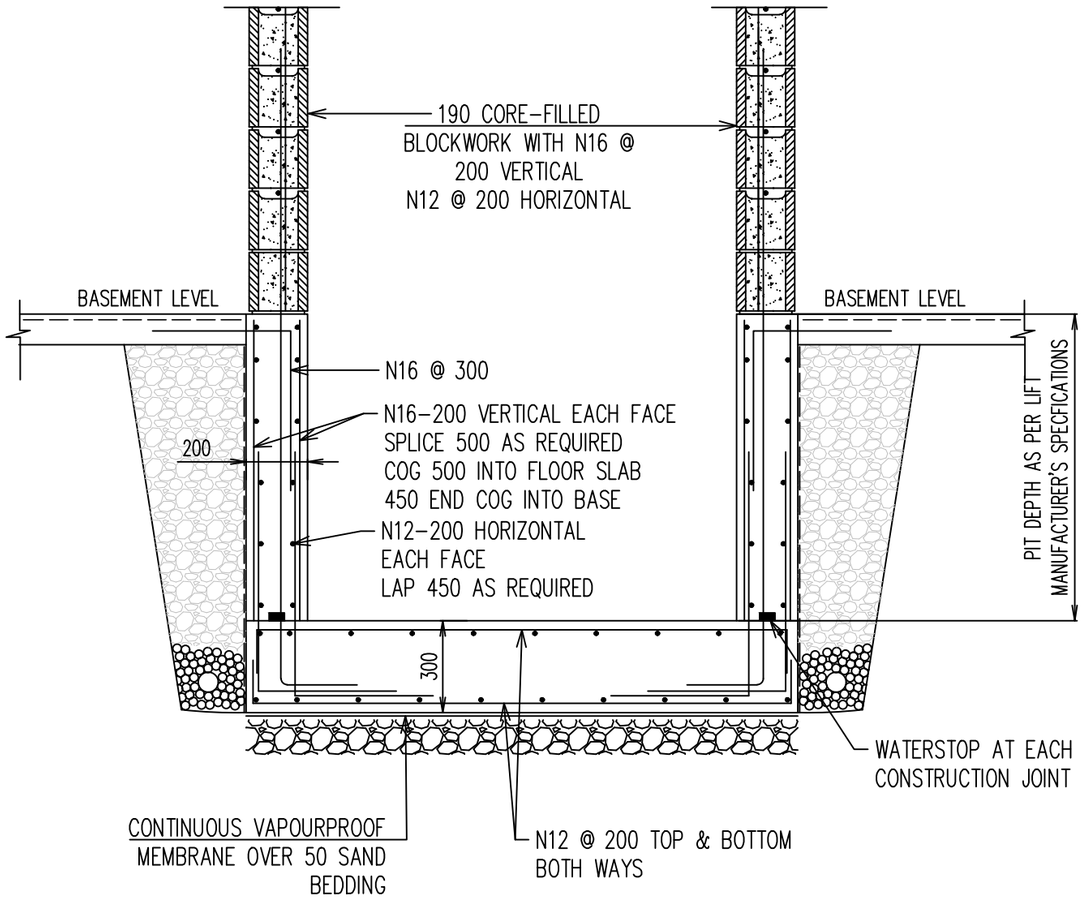

TYPICAL LIFT PIT DETAIL (PF1)

SCALE 1:20

PRINT IN COLOUR

MODULAR ENGINEERS P/L

Structural Engineering | Civil Engineering
Stormwater Engineering | Flood Engineering
Traffic Engineering | Temporary works

ABN : 66 646 960 929
TEL. : 02 873 08473
MOB. : 04 208 98999
EMAIL : info@modularengineers.com.au
WEBSITE : www.modularengineers.com.au
ADDRESS : 6/7 Parkes St., Parramatta NSW 2150

ARCHITECT:
GEGE CONSTRUCTION PTY LTD

PROJECT TITLE :
PROPOSED DUAL OCCUPANCY

SHEET NAME :
SECTION AND DETAILS

PROJECT NUMBER:
STR0162-2025

INTERNAL REVISIONS :

ISSUE	DATE	DESCRIPTION	BY
J	31-08-26	ISSUED FOR CDC	M.J.
I	18-08-26	ISSUED FOR CDC	M.J.
H	12-06-26	ISSUED FOR CDC	M.J.
G	12-06-26	ISSUED FOR CDC	M.J.
F	14-05-26	ISSUED FOR CDC	M.J.
E	05-03-26	ISSUED FOR CDC	M.J.
D	13-02-26	ISSUED FOR CDC	M.J.
C	08-12-25	ISSUED FOR CDC	M.J.

AMENDMENTS

DRAWN : M.J. DATE: 31-08-26
DESIGNED : J.M. REVISION DATE:
QA CHECK : J.M. 31-08-26

APPROVED BY :

ALI AL - OBAIDI
MSc, BSc, MIEAust, CPEng, NER

RPEQ: 28316
NPER: 5358554

ISSUE TYPE :
CDC

SHEET NUMBER :
STR011

SHEET SIZE: A3
REVISION: J

NOTE: THE DESIGN AND DETAILS SHOWN ON THESE DRAWINGS ARE APPLICABLE TO THIS PROJECT ONLY AND MAY NOT BE REPRODUCED IN WHOLE OR IN PART OR BE USED FOR ANY OTHER PROJECT OR PURPOSE WITHOUT THE WRITTEN PERMISSION OF MODULAR ENGINEERS WITH WHOM COPYRIGHT RESIDES.

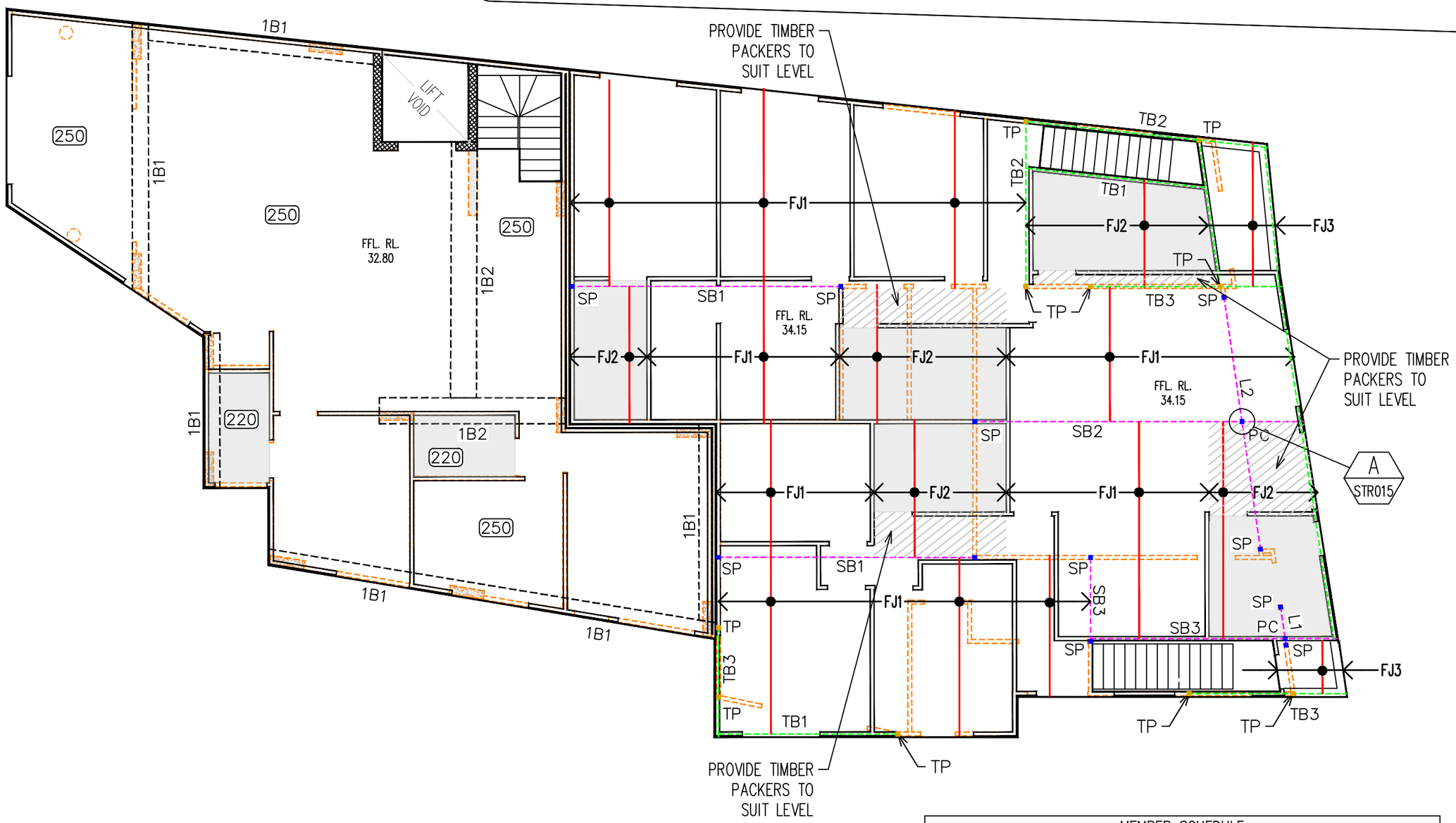

FIRST FLOOR SLAB PLAN

SCALE: 1:100

REFER TO DRAWING NO.STR001 FOR LEGEND

BEAM SCHDULE			
MARK	SIZE (WxD) mm	REINFORCEMENT	f'c
1B1	380W x 400D	4N20 TOP & BOTTOM +R10@300 TIES	32MPa
1B2	600W x 250D	5N20 TOP & BOTTOM +R10@300 TIES	32MPa

MEMBER SCHEDULE		
TB1	300 x 63 LVL	TIMBER FLOOR BEARER
TB2	2/300 x 63 LVL	TIMBER FLOOR BEARER
FJ1	300 x 63 meyJOISTS	TIMBER FLOOR JOISTS AT 450 MAX. CTS.
FJ2	255 x 63 meyJOISTS	TIMBER WET AREA JOISTS AT 450 MAX. CTS.
FJ3	240 x 45 MGP10	DECK FLOOR JOISTS AT 450 MAX. CTS. (H3 TREATED)
SB1	310UB40.4	STEEL BEAM TO AS 4100
SB2	310UB40.4 (CONTINUOUS)	STEEL BEAM TO AS 4100
SB3	300PFC	STEEL BEAM TO AS 4100
L1	250PFC	STEEL BEAM TO AS 4100
L2	380PFC OR 310UB46.2	STEEL BEAM TO AS 4100
WB1	300 x 63 LVL	STEEL BEAM TO AS 4100
SP	89X89X5 SHS	STEEL POST TO AS 4100 (REFER TO DETAIL)
TP	90 x 90 F17	TIMBER POST SEASONED HARDWOOD TO AS 2858

NOTE:
a) REFER TO ARCHITECTS DRAWINGS FOR ROOF PITCHES.
b) ALL DIMENSIONS AND LEVELS ARE TO BE CONFIRMED BY ARCHITECT AND SITE MEASURED BY BUILDER BEFORE FABRICATION.

PRINT IN COLOUR

MODULAR ENGINEERS P/L

Structural Engineering | Civil Engineering
Stormwater Engineering | Flood Engineering
Traffic Engineering | Temporary works

ABN : 66 646 960 929
TEL. : 02 873 08473
MOB. : 04 208 98999
EMAIL : info@modularengineers.com.au
WEBSITE : www.modularengineers.com.au
ADDRESS : 6/7 Parkes St., Parramatta NSW 2150

ARCHITECT:
GEGE CONSTRUCTION PTY LTD

PROJECT TITLE :
PROPOSED DUAL OCCUPANCY

SHEET NAME :
FIRST FLOOR SLAB PLAN

PROJECT NUMBER:
STR0162-2025

INTERNAL REVISIONS :

ISSUE	DATE	DESCRIPTION	BY
J	31-08-26	ISSUED FOR CDC	M.J.
I	18-08-26	ISSUED FOR CDC	M.J.
H	12-06-26	ISSUED FOR CDC	M.J.
G	12-06-26	ISSUED FOR CDC	M.J.
F	14-05-26	ISSUED FOR CDC	M.J.
E	05-03-26	ISSUED FOR CDC	M.J.
D	13-02-26	ISSUED FOR CDC	M.J.
C	08-12-25	ISSUED FOR CDC	M.J.

AMENDMENTS

DRAWN : M.J. DATE: 31-08-26
DESIGNED : J.M. REVISION DATE:
QA CHECK : J.M. 31-08-26

APPROVED BY :

ALI AL - OBAIDI
MSc, BSc, MIEAust, CPEng, NER

RPEQ: 28316
NPER: 5358554

ISSUE TYPE :
CDC

SHEET NUMBER :
STR012

SHEET SIZE: A3
REVISION: J

NOTE: THE DESIGN AND DETAILS SHOWN ON THESE DRAWINGS ARE APPLICABLE TO THIS PROJECT ONLY AND MAY NOT BE REPRODUCED IN WHOLE OR IN PART OR BE USED FOR ANY OTHER PROJECT OR PURPOSE WITHOUT THE WRITTEN PERMISSION OF MODULAR ENGINEERS WITH WHOM COPYRIGHT RESIDES.

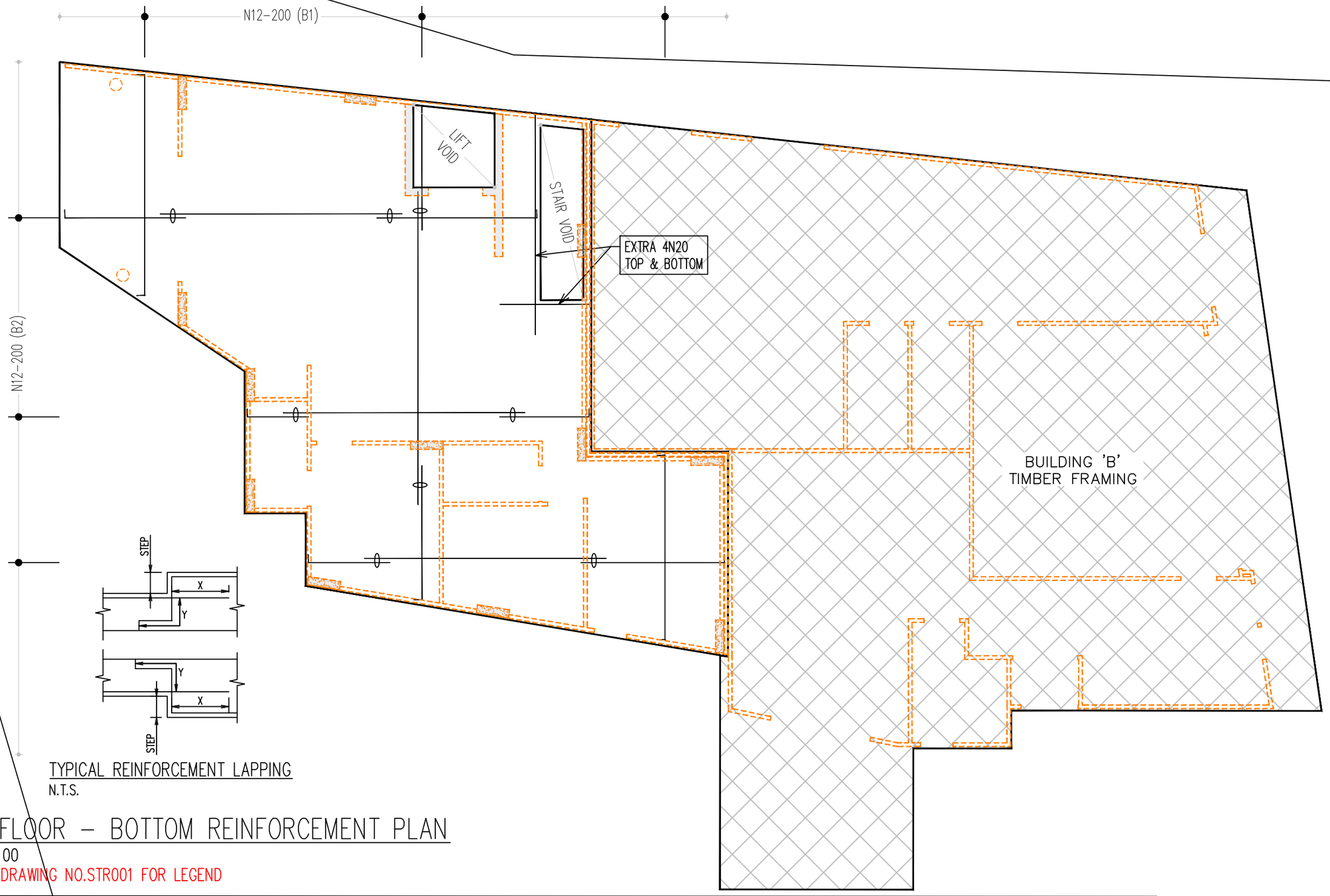

TYPICAL REINFORCEMENT LAPPING
N.T.S.

FIRST FLOOR – BOTTOM REINFORCEMENT PLAN

SCALE: 1:100

REFER TO DRAWING NO.STR001 FOR LEGEND

NOTES:
SUSPENDED SLAB

A. DRAWING TO BE READ IN CONJUNCTION WITH ARCHITECTURE DRAWINGS .
B. REFER TO ARCHITECTURAL DRAWINGS FOR ALL SETOUT, LEVELS, STEPS, FOLDS & FALLS ETC.
C. REFER TO STORMWATER DRAINAGE DRAWINGS FOR LOCATION OF PUMP WELL AND SUMP PITS.
C. ALL CONCRETE CYLINDERS TO BE STORED AND CURED ON SITE PRIOR TESTING TO AS3600.
D. CONCRETE SLAB (f'c)=32 MPa WITH A SLUMP OF 80MM.
E. AGGREGATE MINIMUM SIZE 20MM.
F. ALL BRICKS WALLS TO BE ARTICULATED, EXPANSION JOINT SPACING TO BE 6000mm
G. ALL EXPOSED SLABS TO BE WATERPROOFED WITH APPROVED SYSTEMS.
H. ACOUSTIC ENGINEER TO CHECK AND VERIFY ALL FLOOR SLAB FOR ACOUSTIC REQUIREMENTS IN ACCORDANCE WITH THE BCA REGULATIONS AND ADVISE ON ANY ACOUSTIC TREATMENT NEEDED TO SATISFY THE REGULATION.
I. FOR FOLD REINFORCEMENTS REFER TO SECTION S4 U.N.O.
J. ENSURE 50mm MINIMUM SPACING BETWEEN BARS.
K. PROVIDE ALL EXTRA REINFORCEMENT AS SHOWN ON PLAN.
L. PROVIDE 3N16 TOP AND BOTTOM AT THE PERIMETER OF THE SLAB.
M. SLAB REINFORCEMENT LAYING SEQUENCE U.N.O.:

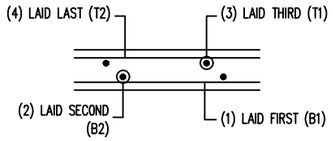

N. TYPICAL TRIMMERS AT PENETRATION DETAIL:

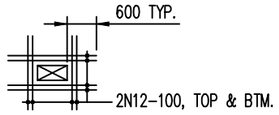

O. TYPICAL TRIMMERS AT RE-ENTRANT CORNERS:

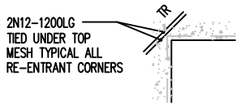

G. PROVIDE TOP & BOTTOM BARS ON ALL WALL OPENINGS AS PER THE SCHEDULE BELOW:

LENGTH OF OPENING (m)	BOTTOM BAR	TOP BAR
1.0 – 1.8	2N16	2N16
1.8 – 2.5	2N20	2N20
2.5 – 3.5	2N24	2N24

H. PROVIDE ADEQUATE OVERLAP AT MESH JOINTS AS FOLLOWS :
400 MIN. LAP FOR SL82 MESH
500 MIN. LAP FOR SL92 MESH
600 MIN. LAP FOR SL102 MESH

I. PROVIDE ADEQUATE OVERLAP FOR BARS AS FOLLOWS:

BAR(X-Y)	MIN LAPPING REQUIRED
N12	500 mm
N16	800 mm
N20	1000 mm
N24	1200 mm
N28	1400 mm

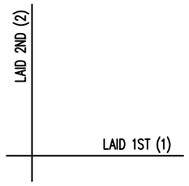

BAR LAYING SEQUENCE
U.N.O.

PRINT IN COLOUR

MODULAR ENGINEERS P/L
Structural Engineering | Civil Engineering
Stormwater Engineering | Flood Engineering
Traffic Engineering | Temporary works
ABN : 66 646 960 929
TEL. : 02 873 08473
MOB. : 04 208 98999
EMAIL : info@modularengineers.com.au
WEBSITE : www.modularengineers.com.au
ADDRESS : 6/7 Parkes St., Parramatta NSW 2150

ARCHITECT:
GEGE CONSTRUCTION PTY LTD

PROJECT TITLE :
PROPOSED DUAL OCCUPANCY

SHEET NAME :
FIRST FLOOR - BOTTOM REINFORCEMENT PLAN

PROJECT NUMBER:
STR0162-2025

INTERNAL REVISIONS :

ISSUE	DATE	DESCRIPTION	BY
J	31-08-26	ISSUED FOR CDC	M.J.
I	18-08-26	ISSUED FOR CDC	M.J.
H	12-06-26	ISSUED FOR CDC	M.J.
G	12-06-26	ISSUED FOR CDC	M.J.
F	14-05-26	ISSUED FOR CDC	M.J.
E	05-03-26	ISSUED FOR CDC	M.J.
D	13-02-26	ISSUED FOR CDC	M.J.
C	08-12-25	ISSUED FOR CDC	M.J.

AMENDMENTS

DRAWN : M.J. DATE: 31-08-26
DESIGNED : J.M. REVISION DATE:
QA CHECK : J.M. 31-08-26

APPROVED BY :

ALI AL - OBAIDI
MSc, BSc, MIEAust, CPEng, NER
RPEQ: 28316
NPER: 5358554

ISSUE TYPE :
CDC

SHEET NUMBER :
STR013

SHEET SIZE: A3
REVISION: J

NOTE: THE DESIGN AND DETAILS SHOWN ON THESE DRAWINGS ARE APPLICABLE TO THIS PROJECT ONLY AND MAY NOT BE REPRODUCED IN WHOLE OR IN PART OR BE USED FOR ANY OTHER PROJECT OR PURPOSE WITHOUT THE WRITTEN PERMISSION OF MODULAR ENGINEERS WITH WHOM COPYRIGHT RESIDES.

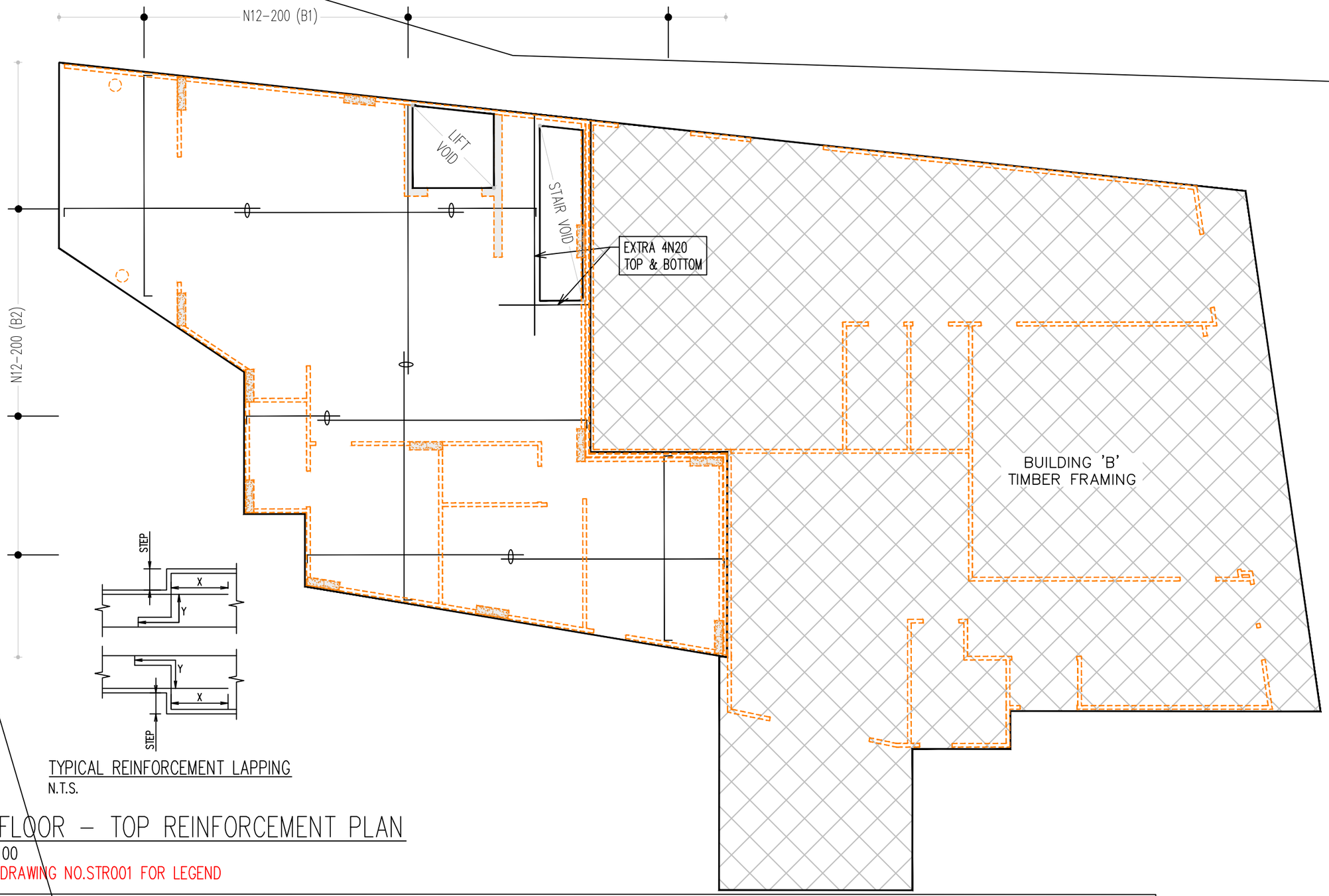

TYPICAL REINFORCEMENT LAPPING
N.T.S.

FIRST FLOOR – TOP REINFORCEMENT PLAN

SCALE: 1:100

REFER TO DRAWING NO.STR001 FOR LEGEND

NOTES:
SUSPENDED SLAB

A. DRAWING TO BE READ IN CONJUNCTION WITH ARCHITECTURE DRAWINGS .
B. REFER TO ARCHITECTURAL DRAWINGS FOR ALL SETOUT, LEVELS, STEPS, FOLDS & FALLS ETC.
C. REFER TO STORMWATER DRAINAGE DRAWINGS FOR LOCATION OF PUMP WELL AND SUMP PITS.
C. ALL CONCRETE CYLINDERS TO BE STORED AND CURED ON SITE PRIOR TESTING TO AS3600.
D. CONCRETE SLAB (f'c)=32 MPa WITH A SLUMP OF 80MM.
E. AGGREGATE MINIMUM SIZE 20MM.
F. ALL BRICKS WALLS TO BE ARTICULATED, EXPANSION JOINT SPACING TO BE 6000mm
G. ALL EXPOSED SLABS TO BE WATERPROOFED WITH APPROVED SYSTEMS.
H. ACOUSTIC ENGINEER TO CHECK AND VERIFY ALL FLOOR SLAB FOR ACOUSTIC REQUIREMENTS IN ACCORDANCE WITH THE BCA REGULATIONS AND ADVISE ON ANY ACOUSTIC TREATMENT NEEDED TO SATISFY THE REGULATION.
I. FOR FOLD REINFORCEMENTS REFER TO SECTION S4 U.N.O.
J. ENSURE 50mm MINIMUM SPACING BETWEEN BARS.
K. PROVIDE ALL EXTRA REINFORCEMENT AS SHOWN ON PLAN.
L. PROVIDE 3N16 TOP AND BOTTOM AT THE PERIMETER OF THE SLAB.
M. SLAB REINFORCEMENT LAYING SEQUENCE U.N.O.:

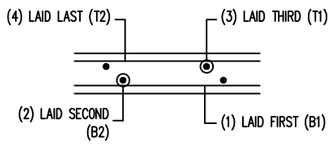

N. TYPICAL TRIMMERS AT PENETRATION DETAIL:

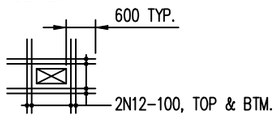

O. TYPICAL TRIMMERS AT RE-ENTRANT CORNERS:

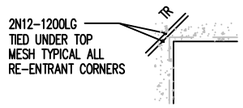

G. PROVIDE TOP & BOTTOM BARS ON ALL WALL OPENINGS AS PER THE SCHEDULE BELOW:

LENGTH OF OPENING (m)	BOTTOM BAR	TOP BAR
1.0 – 1.8	2N16	2N16
1.8 – 2.5	2N20	2N20
2.5 – 3.5	2N24	2N24

H. PROVIDE ADEQUATE OVERLAP AT MESH JOINTS AS FOLLOWS :
400 MIN. LAP FOR SL82 MESH
500 MIN. LAP FOR SL92 MESH
600 MIN. LAP FOR SL102 MESH

I. PROVIDE ADEQUATE OVERLAP FOR BARS AS FOLLOWS:

BAR(X-Y)	MIN LAPPING REQUIRED
N12	500 mm
N16	800 mm
N20	1000 mm
N24	1200 mm
N28	1400 mm

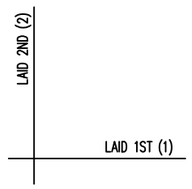

BAR LAYING SEQUENCE
U.N.O.

PRINT IN COLOUR

MODULAR ENGINEERS P/L
Structural Engineering | Civil Engineering
Stormwater Engineering | Flood Engineering
Traffic Engineering | Temporary works
ABN : 66 646 960 929
TEL. : 02 873 08473
MOB. : 04 208 98999
EMAIL : info@modularengineers.com.au
WEBSITE : www.modularengineers.com.au
ADDRESS : 6/7 Parkes St., Parramatta NSW 2150

ARCHITECT:
GEGE CONSTRUCTION PTY LTD

PROJECT TITLE :
PROPOSED DUAL OCCUPANCY

SHEET NAME :
FIRST FLOOR - TOP REINFORCEMENT PLAN

PROJECT NUMBER:
STR0162-2025

INTERNAL REVISIONS :

ISSUE	DATE	DESCRIPTION	BY
J	31-08-26	ISSUED FOR CDC	M.J.
I	18-08-26	ISSUED FOR CDC	M.J.
H	12-06-26	ISSUED FOR CDC	M.J.
G	12-06-26	ISSUED FOR CDC	M.J.
F	14-05-26	ISSUED FOR CDC	M.J.
E	05-03-26	ISSUED FOR CDC	M.J.
D	13-02-26	ISSUED FOR CDC	M.J.
C	08-12-25	ISSUED FOR CDC	M.J.

AMENDMENTS

DRAWN : M.J. DATE: 31-08-26
DESIGNED : J.M. REVISION DATE:
QA CHECK : J.M. 31-08-26

APPROVED BY :

ALI AL - OBAIDI
MSc, BSc, MIEAust, CPEng, NER
RPEQ: 28316
NPER: 5358554

ISSUE TYPE :
CDC

SHEET NUMBER :
STR014

SHEET SIZE: A3
REVISION: J

NOTE: THE DESIGN AND DETAILS SHOWN ON THESE DRAWINGS ARE APPLICABLE TO THIS PROJECT ONLY AND MAY NOT BE REPRODUCED IN WHOLE OR IN PART OR BE USED FOR ANY OTHER PROJECT OR PURPOSE WITHOUT THE WRITTEN PERMISSION OF MODULAR ENGINEERS WITH WHOM COPYRIGHT RESIDES.

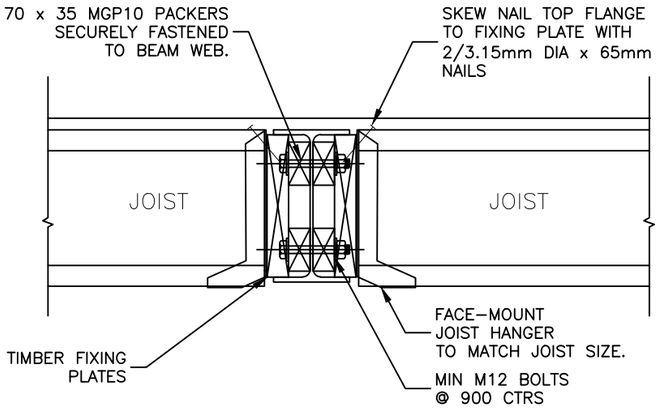

STEEL BEAM TO JOIST CONNECTION

NOT TO SCALE

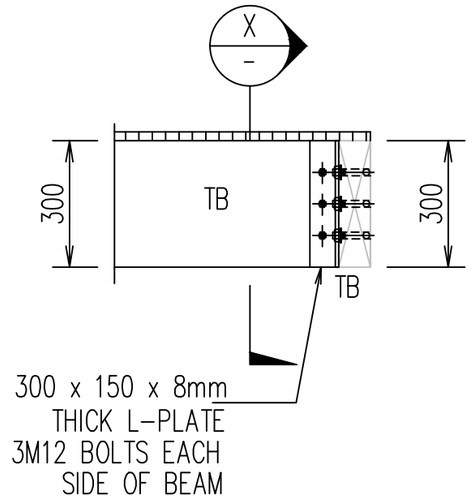

TIMBER BEAM CONNECTION DETAIL

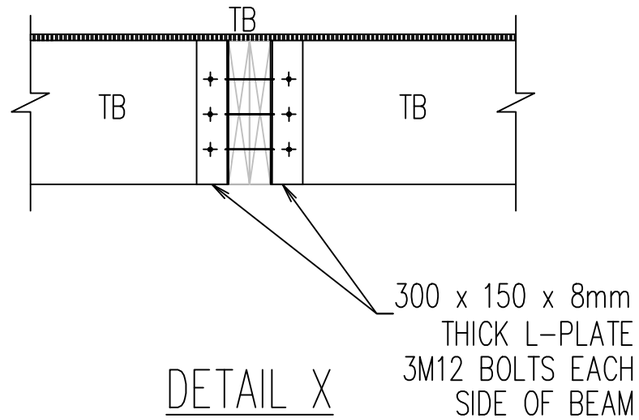

DETAIL X

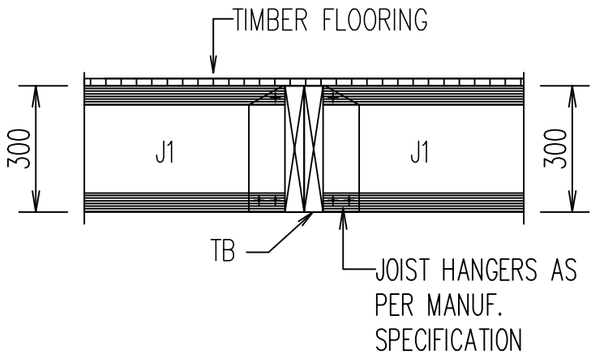

TIMBER BEAM TO JOIST CONNECTION

NOT TO SCALE

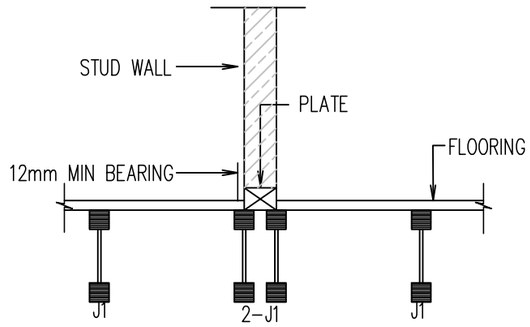

TYPICAL SECTION THRU LOAD BEARING WALL

UNLESS NOTED OTHERWISE

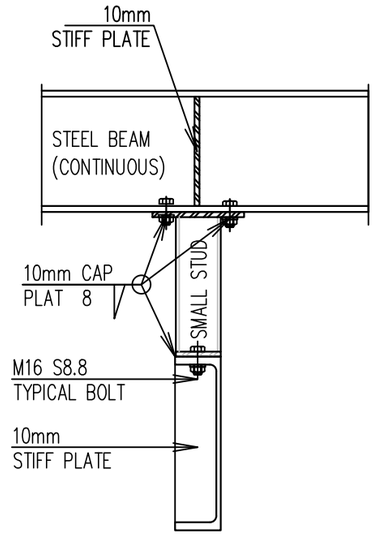

DETAILS

NOT TO SCALE

A
STR007

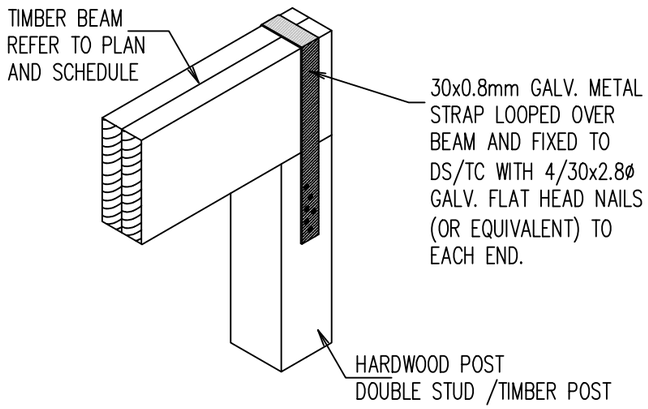

TIMBER BEAM TO POST CONNECTION

NOT TO SCALE

PRINT IN COLOUR

MODULAR ENGINEERS P/L

Structural Engineering | Civil Engineering
Stormwater Engineering | Flood Engineering
Traffic Engineering | Temporary works

ABN : 66 646 960 929
TEL. : 02 873 08473
MOB. : 04 208 98999
EMAIL : info@modularengineers.com.au
WEBSITE : www.modularengineers.com.au
ADDRESS : 6/7 Parkes St., Parramatta NSW 2150

ARCHITECT:
GEGE CONSTRUCTION PTY LTD

PROJECT TITLE :
PROPOSED DUAL OCCUPANCY

SHEET NAME :
SECTION AND DETAILS

PROJECT NUMBER:
STR0162-2025

INTERNAL REVISIONS :

ISSUE	DATE	DESCRIPTION	BY
J	31-08-26	ISSUED FOR CDC	M.J.
I	18-08-26	ISSUED FOR CDC	M.J.
H	12-06-26	ISSUED FOR CDC	M.J.
G	12-06-26	ISSUED FOR CDC	M.J.
F	14-05-26	ISSUED FOR CDC	M.J.
E	05-03-26	ISSUED FOR CDC	M.J.
D	13-02-26	ISSUED FOR CDC	M.J.
C	08-12-25	ISSUED FOR CDC	M.J.

AMENDMENTS

DRAWN : M.J. DATE: 31-08-26
DESIGNED : J.M. REVISION DATE:
QA CHECK : J.M. 31-08-26

APPROVED BY :

ALI AL - OBAIDI
MSc, BSc, MIEAust, CPEng, NER

RPEQ: 28316
NPER: 5358554

ISSUE TYPE :
CDC

SHEET NUMBER :
STR015

SHEET SIZE: **A3**
REVISION: **J**

NOTE: THE DESIGN AND DETAILS SHOWN ON THESE DRAWINGS ARE APPLICABLE TO THIS PROJECT ONLY AND MAY NOT BE REPRODUCED IN WHOLE OR IN PART OR BE USED FOR ANY OTHER PROJECT OR PURPOSE WITHOUT THE WRITTEN PERMISSION OF MODULAR ENGINEERS WITH WHOM COPYRIGHT RESIDES.

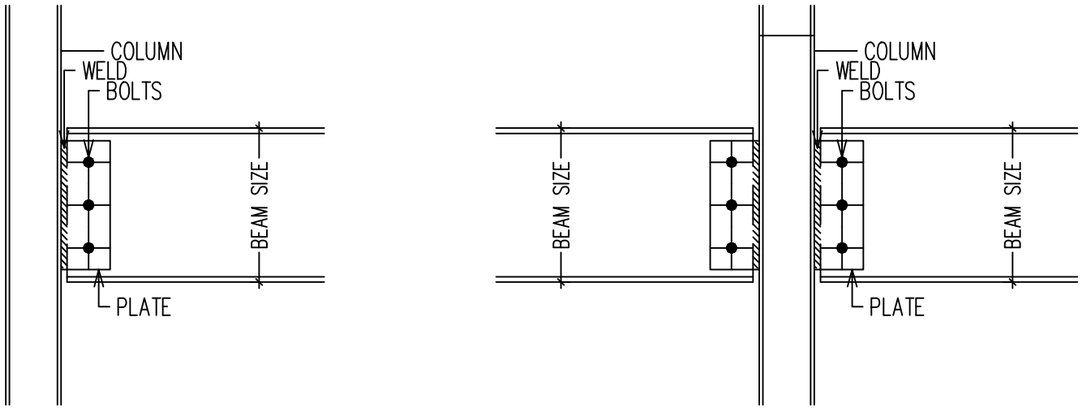

TYPICAL STEEL BEAM TO POST DETAIL

NOT TO SCALE

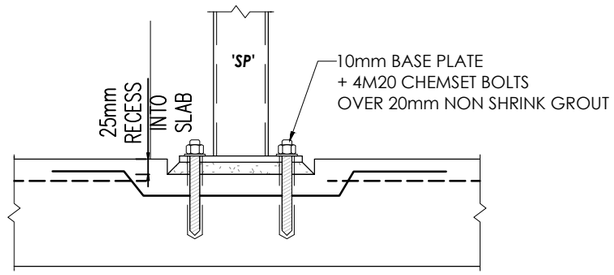

STEEL POST TO SLAB CONNECTION DETAIL

SCALE
1:10

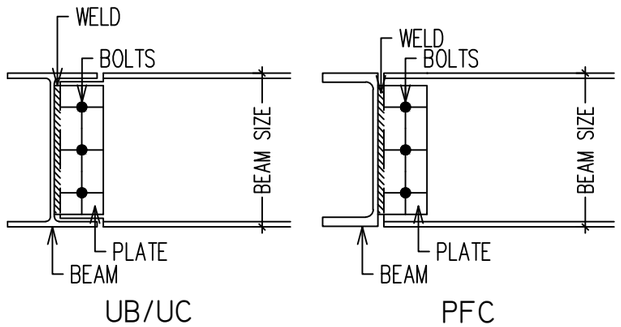

TYPICAL STEEL BEAM CONNECTION DETAIL

NOT TO SCALE

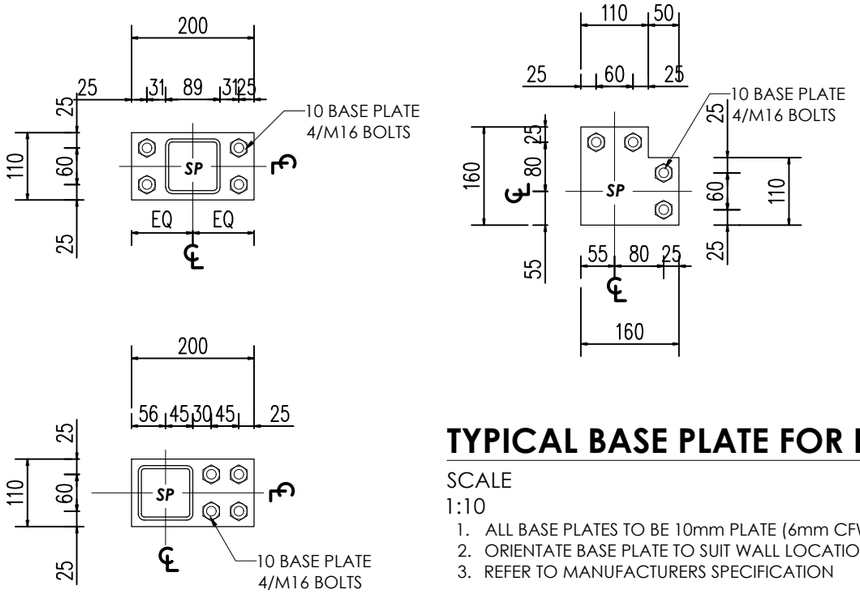

TYPICAL BASE PLATE FOR POST DETAIL

SCALE
1:10

1. ALL BASE PLATES TO BE 10mm PLATE (6mm CFW)
2. ORIENTATE BASE PLATE TO SUIT WALL LOCATION
3. REFER TO MANUFACTURERS SPECIFICATION

TYPICAL CONNECTION SCHEDULE FOR UB, UC & PFC BEAM TO FIN PLATE CONNECTIONS			
BEAM SIZE	PLATE	BOLTS	WELD
100-125	10MM	2-M10	6MM
150	10MM	2-M16	6MM
180-230	10MM	2-M20	6MM
250-310	10MM	3-M20	6MM
360	10MM	4-M20	6MM
410-460	10MM	5-M20	6MM

- ALL WELDS TO BE CONTINUOUS FILLET WELDS ALONG ONE SIDE OF THE PLATE
- M10-M12 BOLTS TO BE COMMERCIAL BOLTS PROPERTY CLASS 4.6 U.N.O
- M16-M20 BOLTS TO BE STRUCTURAL BOLTS PROPERTY CLASS 8.8 U.N.O
- ALL BOLTS TO BE SNUG-TIGHT (4.6/S & 8.8/S) U.N.O

89x89 SHS POST DETAIL

PRINT IN COLOUR

MODULAR ENGINEERS P/L

Structural Engineering | Civil Engineering
Stormwater Engineering | Flood Engineering
Traffic Engineering | Temporary works

ABN : 66 646 960 929
TEL. : 02 873 08473
MOB. : 04 208 98999
EMAIL : info@modularengineers.com.au
WEBSITE : www.modularengineers.com.au
ADDRESS : 6/7 Parkes St., Parramatta NSW 2150

ARCHITECT:
GEGE CONSTRUCTION PTY LTD

PROJECT TITLE :
PROPOSED DUAL OCCUPANCY

SHEET NAME :
SECTION AND DETAILS

PROJECT NUMBER:
STR0162-2025

INTERNAL REVISIONS :

ISSUE	DATE	DESCRIPTION	BY
J	31-08-26	ISSUED FOR CDC	M.J.
I	18-08-26	ISSUED FOR CDC	M.J.
H	12-06-26	ISSUED FOR CDC	M.J.
G	12-06-26	ISSUED FOR CDC	M.J.
F	14-05-26	ISSUED FOR CDC	M.J.
E	05-03-26	ISSUED FOR CDC	M.J.
D	13-02-26	ISSUED FOR CDC	M.J.
C	08-12-25	ISSUED FOR CDC	M.J.

AMENDMENTS

DRAWN : M.J. DATE: 31-08-26
DESIGNED : J.M. REVISION DATE:
QA CHECK : J.M. 31-08-26

APPROVED BY :

ALI AL - OBAIDI
MSc, BSc, MIEAust, CPEng, NER

RPEQ: 28316
NPER: 5358554

ISSUE TYPE :
CDC

SHEET NUMBER :
STR016

SHEET SIZE: A3
REVISION: J

NOTE: THE DESIGN AND DETAILS SHOWN ON THESE DRAWINGS ARE APPLICABLE TO THIS PROJECT ONLY AND MAY NOT BE REPRODUCED IN WHOLE OR IN PART OR BE USED FOR ANY OTHER PROJECT OR PURPOSE WITHOUT THE WRITTEN PERMISSION OF MODULAR ENGINEERS WITH WHOM COPYRIGHT RESIDES.

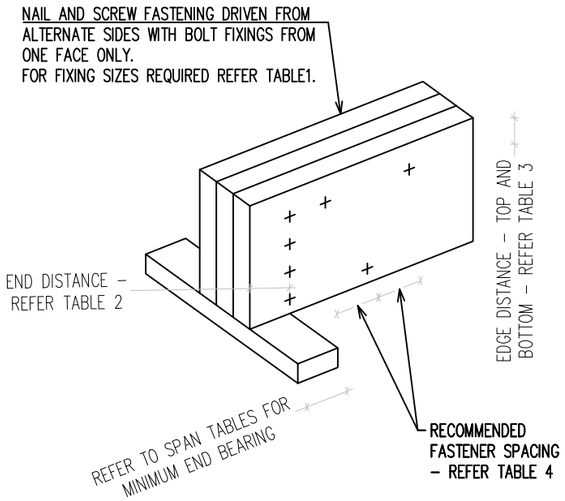

ASSEMBLY OF MULTIPLE SECTION LVL MEMBERS

NOT TO SCALE

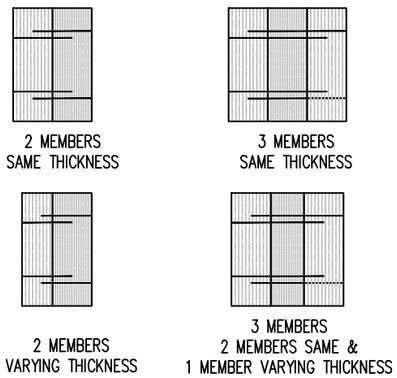

MULTIPLE SECTION LVL MEMBERS SUGGESTED CONFIGURATIONS

NOT TO SCALE

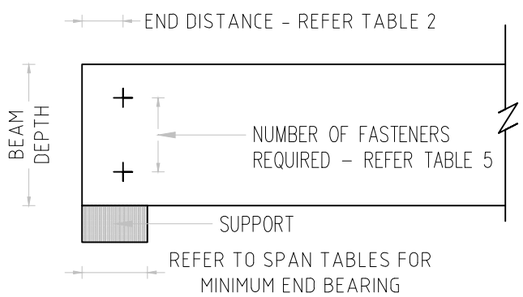

FASTENERS AT SUPPORTS

NOT TO SCALE

TABLE 1 –RECOMMENDED FASTENER SIZES

SINGLE LAMINATE THICKNESS (mm)	NAILS		TYPE 17 TEK SCREWS		BOLTS	
	MIN. DIA. (mm)	MIN. LENGTH (mm)	SCREW No.	MIN. LENGTH (mm)	MIN. DIA. (mm)	MIN. LENGTH (mm)
35	2.87	75	NO.10	75	M10	100
45	3.05	90	NO.12	75	M12	125
63	3.33	100	NO.14	100	M12	150

TABLE 2 –RECOMMENDED FASTENER END DISTANCE

NAILS		TYPE 17 TEK SCREWS		BOLTS	
NAIL DIA. (mm)	END DISTANCE (mm)	SCREW No.	END DISTANCE (mm)	BOLT DIA. (mm)	END DISTANCE (mm)
2.87	60	NO.10	50	M10	50
3.05	65	NO.12	60	M12	60
3.33	70	NO.14	65	M12	60

TABLE 3 –RECOMMENDED FASTENER EDGE DISTANCE

NAILS		TYPE 17 TEK SCREWS		BOLTS	
NAIL DIA. (mm)	EDGE DISTANCE (mm)	SCREW No.	EDGE DISTANCE (mm)	BOLT DIA. (mm)	EDGE DISTANCE (mm)
2.87	20	NO.10	30	M10	50
3.05	20	NO.12	30	M12	60
3.33	20	NO.14	35	M12	60

TABLE4 –RECOMMENDED SPACING OF FASTENERS ALONG BEAMS

NAILS		TYPE 17 TEK SCREWS		BOLTS	
NAIL DIA. (mm)	SPACING (mm)	SCREW No.	SPACING (mm)	BOLT DIA. (mm)	SPACING (mm)
2.87	150	NO.10	200	M10	300
3.05	150	NO.12	200	M12	450
3.33	200	NO.14	200	M12	600

TABLE5 –RECOMMENDED NUMBER OF FASTENERS REQUIRED AT SUPPORTS

BEAM DEPTH (mm)	NUMBER OF FASTENERS REQUIRED		
	NAIL	TYPE 17 TEK SCREWS	BOLTS
90–150	2	2	1
200–240	4	3	2
300	5	4	3
360	6	4	3
400	6	4	3

TABLE6 –RECOMMENDED FASTENERS REQUIRED FOR FIXING MULTIPLE SECTION PRIMARY BEAMS TOGETHER THAT SUPPORT SECONDARY BEAMS

BEAM DEPTH (mm)	NUMBER OF FASTENERS REQUIRED		
	NAIL	TYPE 17 TEK SCREWS	BOLTS
90–150	3	2	1
200–240	5	3	2
300	6	4	3
360	8	4	3
400	8	4	3

NOTES ON THE INSTALLATION OF FASTENERS:

A. EXPOSED ENDS OF NAILS SHOULD BE CLENCHED OVER.
B. WHEN USING TYPE 17 OR BUGLE BATTEN WOOD SCREWS IT IS RECOMMENDED THAT THE MULTIPLE SECTION MEMBERS BE TIGHTLY CLAMPED TOGETHER. THIS WILL PREVENT THE FACE OF THE 2ND OR 3RD LVL MEMBER BEING PUSHED AWAY WHILE INSTALLING THE SCREW.
C. WHERE A FLUSH FINISH IS REQUIRED TO THE MEMBER A BUGLE BATTEN SCREW FASTENER IS RECOMMENDED.
D. TYPE 17 SCREWS WITH HEX HEADS ARE ONLY SUITABLE FOR JOINING 2 MEMBERS TOGETHER. MULTIPLE SECTION MEMBERS COMPRISING 3 MEMBERS SHOULD USE BUGLE BATTEN SCREW FASTENERS FOR INTERNAL LAMINA.
E. HOLES DRILLED FOR THE INSTALLATION OF BOLT FASTENERS SHOULD BE THE SAME DIA. AS THE BOLT SHANK DIA. BUT NOT MORE THAN 1mm GREATER THAN THE BOLT SHANK DIA. EG FOR 12mm BOLTS THE MAX DRILL HOLE SHOULD BE ≤13mm.
F. WHERE BOLT FASTENERS ARE UTILIZED TO JOIN MULTIPLE SECTION MEMBERS TOGETHER THE ENDS OF THE BOLTS ARE TO BE FINISHED WITH 3mm THICK FLAT STEEL WASHERS.

FABRICATION OF MULTIPLE SECTION MEMBERS

A. CARE SHOULD BE TAKEN WHEN FABRICATING MULTIPLE SECTION MEMBERS TO ENSURE THAT THE
B. INDIVIDUAL LAMINATES DO NOT CUP OR WARP BEFORE OR AFTER FABRICATION. INDIVIDUAL MEMBERS
C. SHOULD BE DRY AND NOT CUPPED OR BOWED BEFORE FABRICATION. MOISTURE ENTRY BETWEEN
D. LAMINATIONS SHOULD BE MINIMIZED OR PREVENTED AFTER FABRICATION AS THE MEMBERS MAY
E. CUP OR WARP THEREBY REDUCING THE FASTENER EFFICIENCY.
F. FABRICATED MULTIPLE SECTION MEMBERS SHOULD BE STORED UNDER COVER AND ABOVE GROUND
G. ON SUPPORTS SPACED NOT GREATER THAN 1800MM.

PRINT IN COLOUR

MODULAR ENGINEERS P/L

Structural Engineering | Civil Engineering
Stormwater Engineering | Flood Engineering
Traffic Engineering | Temporary works

ABN : 66 646 960 929
TEL. : 02 873 08473
MOB. : 04 208 98999
EMAIL : info@modularengineers.com.au
WEBSITE : www.modularengineers.com.au
ADDRESS : 6/7 Parkes St., Parramatta NSW 2150

ARCHITECT:
GEGE CONSTRUCTION PTY LTD

PROJECT TITLE :
PROPOSED DUAL OCCUPANCY

SHEET NAME :
SECTION AND DETAILS

PROJECT NUMBER:
STR0162-2025

INTERNAL REVISIONS :

ISSUE	DATE	DESCRIPTION	BY
J	31-08-26	ISSUED FOR CDC	M.J.
I	18-08-26	ISSUED FOR CDC	M.J.
H	12-06-26	ISSUED FOR CDC	M.J.
G	12-06-26	ISSUED FOR CDC	M.J.
F	14-05-26	ISSUED FOR CDC	M.J.
E	05-03-26	ISSUED FOR CDC	M.J.
D	13-02-26	ISSUED FOR CDC	M.J.
C	08-12-25	ISSUED FOR CDC	M.J.

AMENDMENTS

DRAWN : M.J. DATE: 31-08-26
DESIGNED : J.M. REVISION DATE:
QA CHECK : J.M. 31-08-26

APPROVED BY :

ALI AL - OBAIDI
MSc, BSc, MIEAust, CPEng, NER

RPEQ: 28316
NPER: 5358554

ISSUE TYPE :
CDC

SHEET NUMBER :
STR017

SHEET SIZE: A3
REVISION: J

NOTE: THE DESIGN AND DETAILS SHOWN ON THESE DRAWINGS ARE APPLICABLE TO THIS PROJECT ONLY AND MAY NOT BE REPRODUCED IN WHOLE OR IN PART OR BE USED FOR ANY OTHER PROJECT OR PURPOSE WITHOUT THE WRITTEN PERMISSION OF MODULAR ENGINEERS WITH WHOM COPYRIGHT RESIDES.

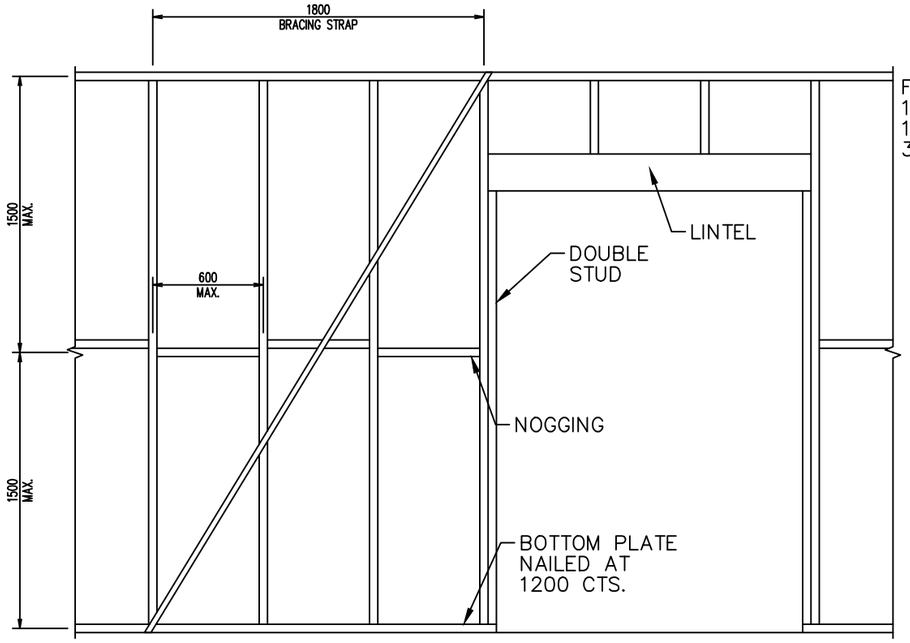

TYPICAL TIMBER WALL FRAMING

SCALE: N.T.S.

FASTENER SPACING:
150mm TOP & BTM. PLATES
150mm VERTICAL EDGES, NOGGING
300mm INTERMEDIATE STUDS

MINIMUM PLYWOOD THICKNESS (mm)		
STRESS GRADE	STUD SPACING (mm)	
	450	600
No. NOGGING (EXCEPT HORIZONTAL BUTT JOINTS		
F8	7	9
F11	4.5	7
F14	4	6
F27	3	4.5
ONE ROW OF NOGGING		
F8	7	7
F11	4.5	4.5
F14	4	4
F27	3	3

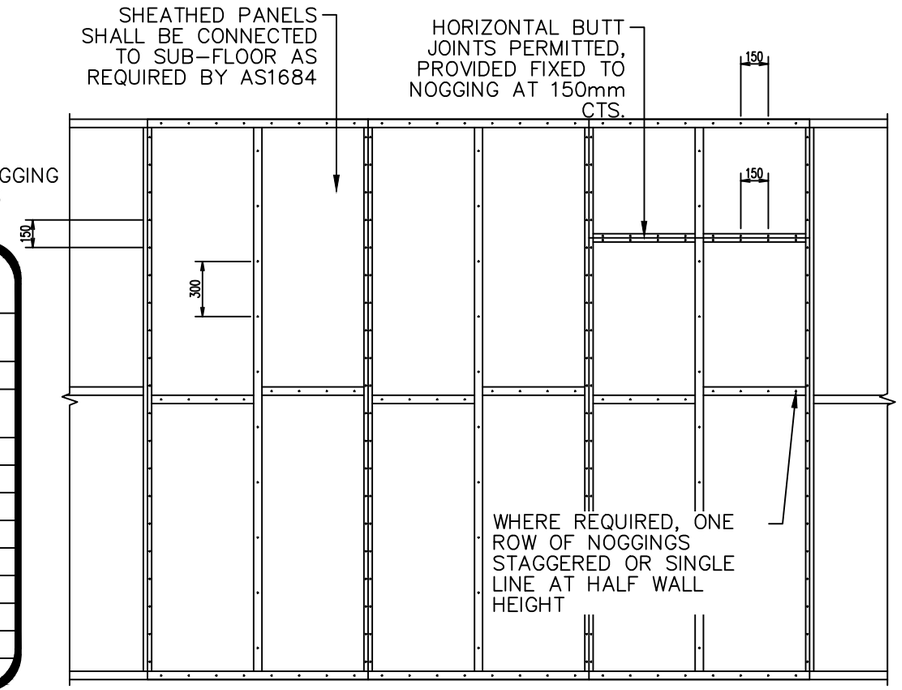

TYPICAL PLY BRACING DETAIL

SCALE: N.T.S.

READ IN CONJUNCTION WITH AS1684
TABLE 8.18(g) USING METHOD B (6.0Kn/m
RATING FOR 2.7m HIGH WALLS

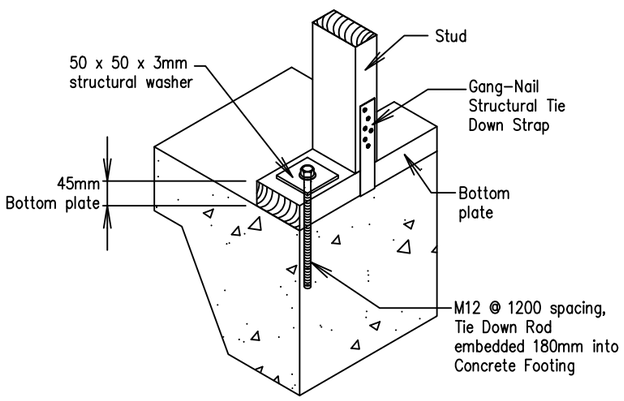

BOTTOM PLATE DETAIL

PRINT IN COLOUR

MODULAR ENGINEERS P/L

Structural Engineering | Civil Engineering
Stormwater Engineering | Flood Engineering
Traffic Engineering | Temporary works

ABN : 66 646 960 929
TEL. : 02 873 08473
MOB. : 04 208 98999
EMAIL : info@modularengineers.com.au
WEBSITE : www.modularengineers.com.au
ADDRESS : 6/7 Parkes St., Parramatta NSW 2150

ARCHITECT:
GEGE CONSTRUCTION PTY LTD

PROJECT TITLE :
PROPOSED DUAL OCCUPANCY

SHEET NAME :
SECTION AND DETAILS

PROJECT NUMBER:
STR0162-2025

INTERNAL REVISIONS :

ISSUE	DATE	DESCRIPTION	BY
J	31-08-26	ISSUED FOR CDC	M.J.
I	18-08-26	ISSUED FOR CDC	M.J.
H	12-06-26	ISSUED FOR CDC	M.J.
G	12-06-26	ISSUED FOR CDC	M.J.
F	14-05-26	ISSUED FOR CDC	M.J.
E	05-03-26	ISSUED FOR CDC	M.J.
D	13-02-26	ISSUED FOR CDC	M.J.
C	08-12-25	ISSUED FOR CDC	M.J.

AMENDMENTS

DRAWN : M.J. DATE: 31-08-26
DESIGNED : J.M. REVISION DATE:
QA CHECK : J.M. 31-08-26

APPROVED BY :

ALI AL - OBAIDI
MSc, BSc, MIEAust, CPEng, NER

RPEQ: 28316
NPER: 5358554

ISSUE TYPE :
CDC

SHEET NUMBER :
STR018

SHEET SIZE: A3
REVISION: J

NOTE: THE DESIGN AND DETAILS SHOWN ON THESE DRAWINGS ARE APPLICABLE TO THIS PROJECT ONLY AND MAY NOT BE REPRODUCED IN WHOLE OR IN PART OR BE USED FOR ANY OTHER PROJECT OR PURPOSE WITHOUT THE WRITTEN PERMISSION OF MODULAR ENGINEERS WITH WHOM COPYRIGHT RESIDES.

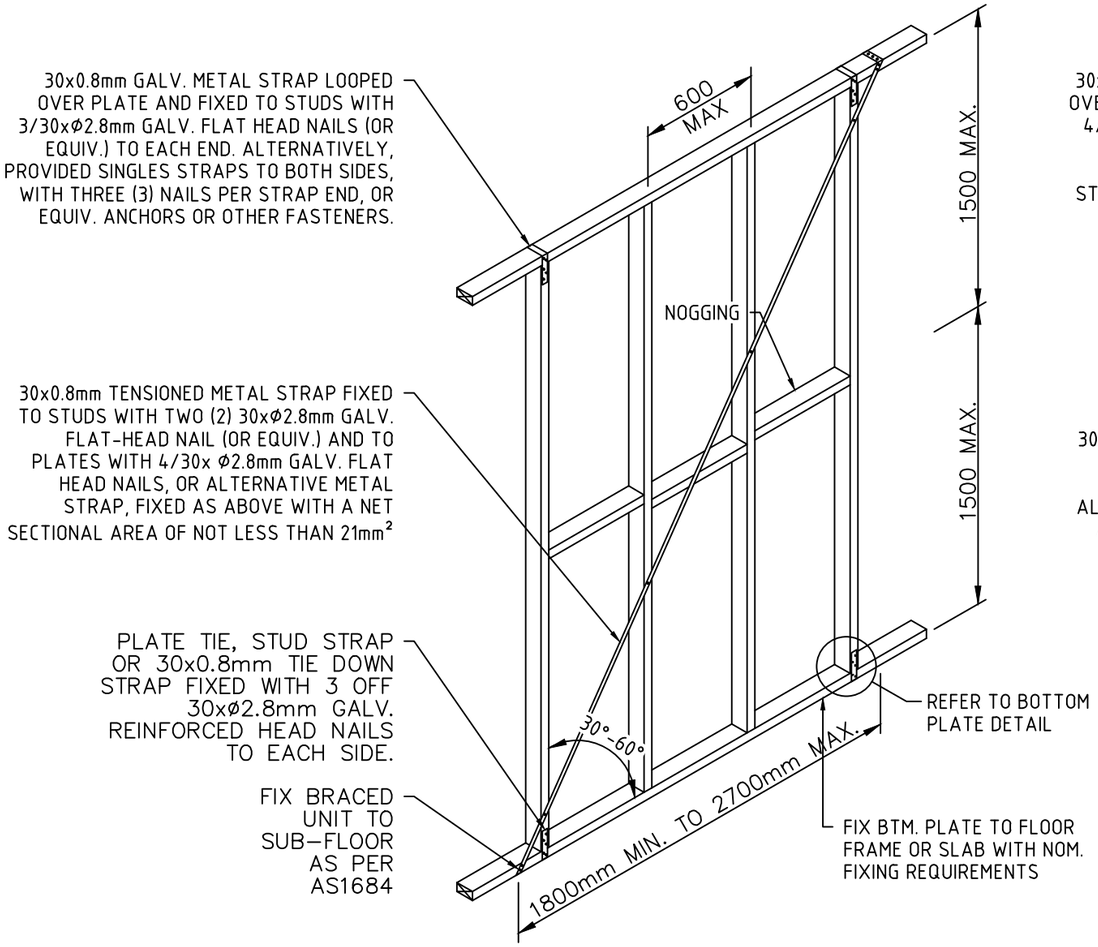

TENSIONED SINGLE METAL BRACING DETAIL

SCALE: N.T.S.

READ IN CONJUNCTION WITH AS1684 TABLE 8.18(d) (1.5kN/m RATING FOR 2.7m HIGH WALLS

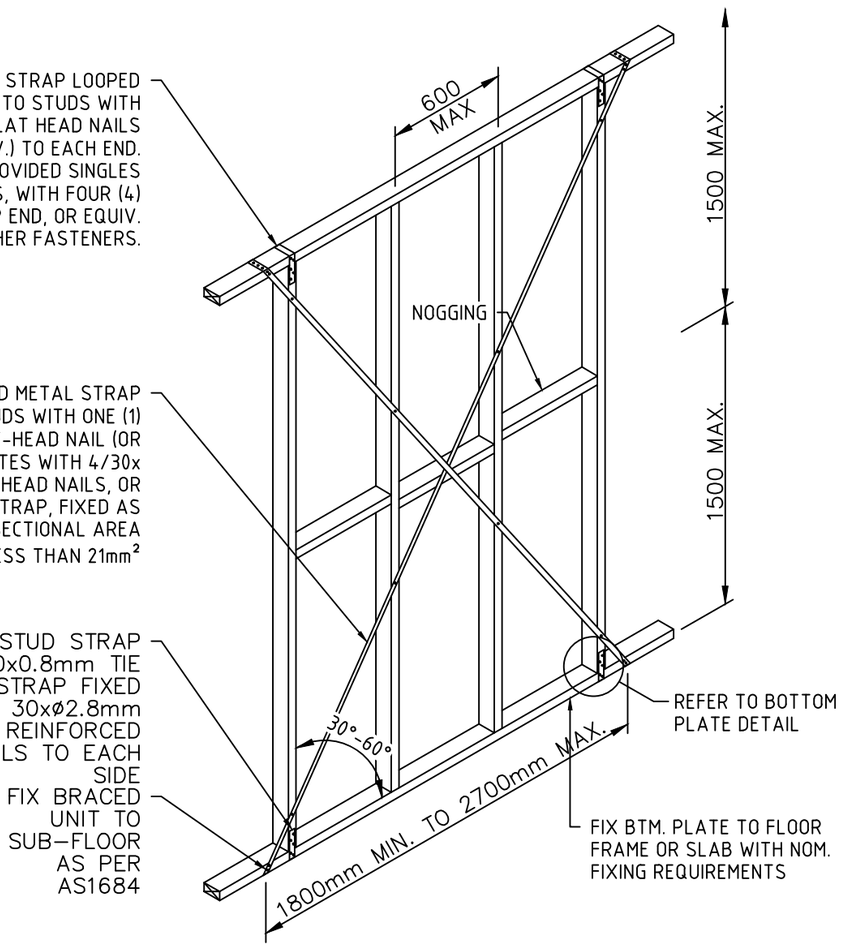

TENSIONED DOUBLE METAL BRACING DETAIL

SCALE: N.T.S.

READ IN CONJUNCTION WITH AS1684 TABLE 8.18(d) (3.0kN/m RATING FOR 2.7m HIGH WALLS

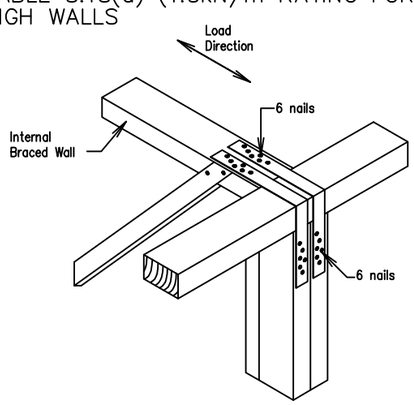

STRUCTURAL TIE DOWN STRAP

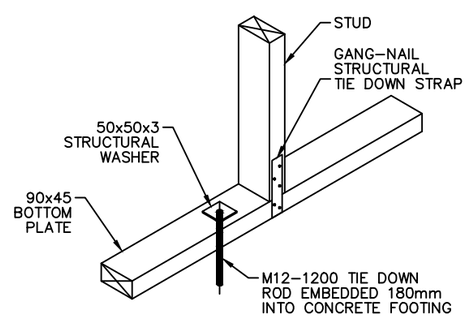

BOTTOM PLATE DETAIL

SCALE: 1:10

PRINT IN COLOUR

MODULAR ENGINEERS P/L

Structural Engineering | Civil Engineering
Stormwater Engineering | Flood Engineering
Traffic Engineering | Temporary works

ABN : 66 646 960 929
TEL. : 02 873 08473
MOB. : 04 208 98999
EMAIL : info@modularengineers.com.au
WEBSITE : www.modularengineers.com.au
ADDRESS : 6/7 Parkes St., Parramatta NSW 2150

ARCHITECT:
GEGE CONSTRUCTION PTY LTD

PROJECT TITLE :
PROPOSED DUAL OCCUPANCY

SHEET NAME :
SECTION AND DETAILS

PROJECT NUMBER:
STR0162-2025

INTERNAL REVISIONS :

ISSUE	DATE	DESCRIPTION	BY
J	31-08-26	ISSUED FOR CDC	M.J.
I	18-08-26	ISSUED FOR CDC	M.J.
H	12-06-26	ISSUED FOR CDC	M.J.
G	12-06-26	ISSUED FOR CDC	M.J.
F	14-05-26	ISSUED FOR CDC	M.J.
E	05-03-26	ISSUED FOR CDC	M.J.
D	13-02-26	ISSUED FOR CDC	M.J.
C	08-12-25	ISSUED FOR CDC	M.J.

AMENDMENTS

DRAWN : M.J. DATE: 31-08-26
DESIGNED : J.M. REVISION DATE:
QA CHECK : J.M. 31-08-26

APPROVED BY :

ALI AL - OBAIDI
MSc, BSc, MIEAust, CPEng, NER

RPEQ: 28316
NPER: 5358554

ISSUE TYPE :
CDC

SHEET NUMBER :
STR019

SHEET SIZE: **A3**
REVISION: **J**

NOTE: THE DESIGN AND DETAILS SHOWN ON THESE DRAWINGS ARE APPLICABLE TO THIS PROJECT ONLY AND MAY NOT BE REPRODUCED IN WHOLE OR IN PART OR BE USED FOR ANY OTHER PROJECT OR PURPOSE WITHOUT THE WRITTEN PERMISSION OF MODULAR ENGINEERS WITH WHOM COPYRIGHT RESIDES.

FIXING AT TOP OF BRACING WALLS

SCALE N.T.S.

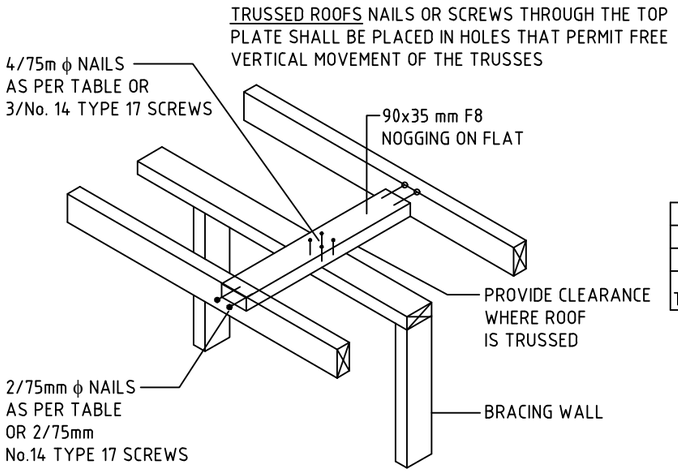

	SHEAR CAPACITY (kN					
	UNSEASONED TIMBER			SEASONED TIMBER		
	J2	J3	J4	JD4	JD5	JD6
	NAILS					
3.05	3.0	2.1	1.5	2.1	1.8	1.3
3.33	3.3	2.4	1.7	2.4	2.0	1.5
	SCREWS					
No. 14 TYPE 17	12	8.3	5.9	8.3	5.9	4.3

NOTE:

1. PLYWOOD SHALL BE NAILED TO FRAME USING 30mm x 2.8mm ϕ FLAT-HEAD NAILS OR EQUIVALENT.

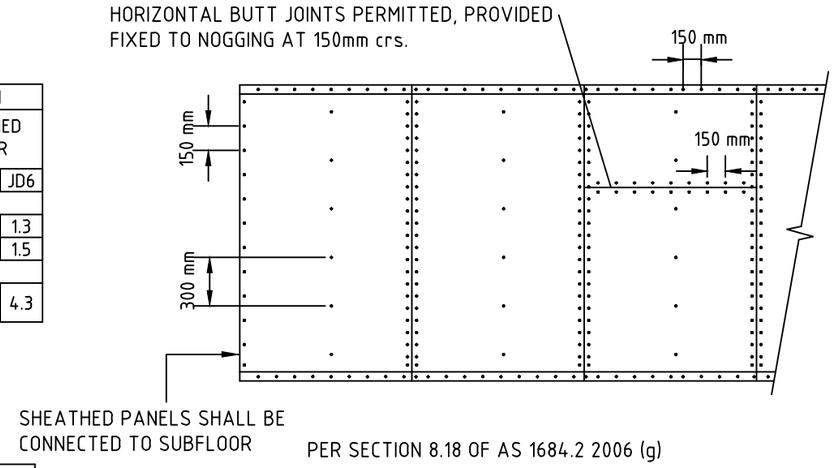

PER SECTION 8.18 OF AS 1684.2 2006 (g)

TYPICAL PLY BRACING DETAIL

SCALE N.T.S.

MINIMUM PLYWOOD THICKNESS (mm)			BRACING CAPACITY (kN/m)
STRESS GRADE	STUD SPACING (mm)		
	450	600	
NO NOGGING			3.4
F8	7	9	
F11	4.5	7	
F14	4	6	
F27	3	4.5	
ONE ROW OF NOGGING			
F8	7	7	
F11	4.5	4.5	
F14	4	4	
F27	3	3	

PLYWOOD BRACING

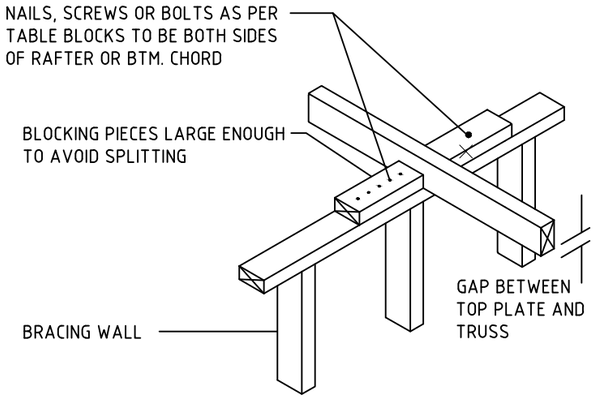

	SHEAR CAPACITY (kN					
	UNSEASONED TIMBER			SEASONED TIMBER		
	J2	J3	J4	JD4	JD5	JD6
	NAILS					
4/3.05 ϕ	5.0	3.6	2.5	3.6	3.0	2.2
6/3.05 ϕ	6.6	4.7	3.4	5.0	4.2	3.1
4/3.33 ϕ	5.6	4.0	2.8	4.0	3.3	2.5
6/3.33 ϕ	7.4	5.3	3.7	5.5	4.6	3.5
	BOLTS					
M10	6.4	4.1	2.6	4.3	3.0	2.0
M12	7.6	4.9	3.1	5.1	3.6	2.5
2/M10	13.0	8.0	5.1	8.4	5.9	4.0
	SCREWS					
2/No. 14 TYPE 17	9.7	6.9	4.9	6.9	4.9	3.6
3/No. 14 TYPE 17	15.0	10.0	7.4	10.0	7.4	5.4

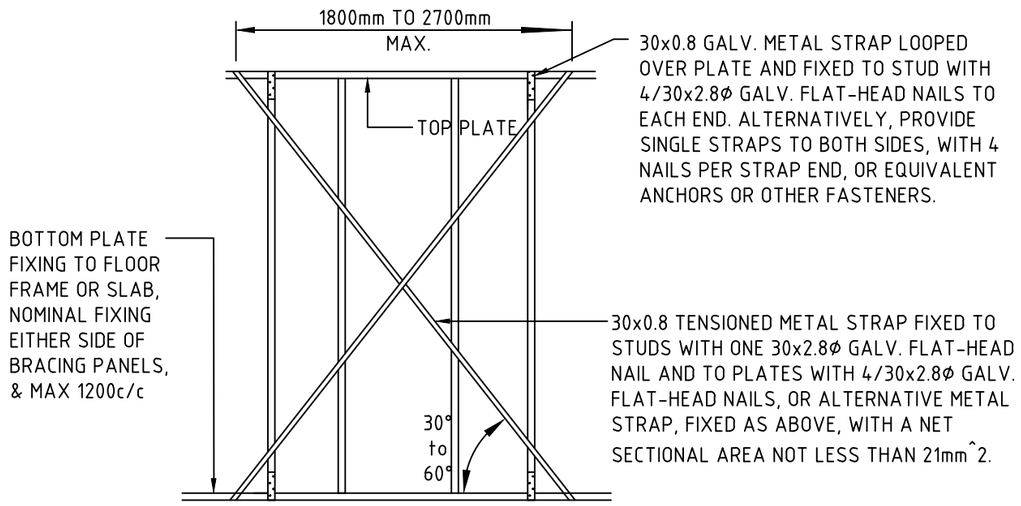

(DMB) BRACING DETAIL-(3.0KN/m)

SCALE N.T.S.

PER SECTION 8.18 OF AS 1684.2 2006
(d) DOUBLE DIAGONAL TENSION OR METAL STRAP BRACE

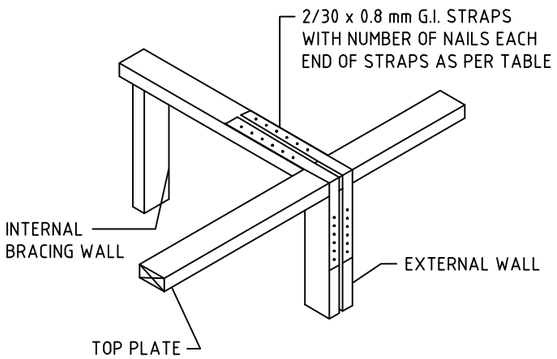

		SHEAR CAPACITY (kN					
		UNSEASONED TIMBER			SEASONED TIMBER		
		J2	J3	J4	JD4	JD5	JD6
STRAPS		NAILS					
1	4/2.8 ϕ	4.3	3.1	2.2	3.3	3.0	2.1
	6/2.8 ϕ	6.5	4.6	3.3	4.9	4.0	3.1
2	4/2.8 ϕ	8.7	6.2	4.4	6.6	5.4	4.1
	6/2.8 ϕ	13.0	9.3	6.6	9.8	8.1	6.1

PRINT IN COLOUR

MODULAR ENGINEERS P/L

Structural Engineering | Civil Engineering
Stormwater Engineering | Flood Engineering
Traffic Engineering | Temporary works

ABN : 66 646 960 929
TEL. : 02 873 08473
MOB. : 04 208 98999
EMAIL : info@modularengineers.com.au
WEBSITE : www.modularengineers.com.au
ADDRESS : 6/7 Parkes St., Parramatta NSW 2150

ARCHITECT:
GEGE CONSTRUCTION PTY LTD

PROJECT TITLE :
PROPOSED DUAL OCCUPANCY

SHEET NAME :
SECTION AND DETAILS

PROJECT NUMBER:
STR0162-2025

INTERNAL REVISIONS :

ISSUE	DATE	DESCRIPTION	BY
J	31-08-26	ISSUED FOR CDC	M.J.
I	18-08-26	ISSUED FOR CDC	M.J.
H	12-06-26	ISSUED FOR CDC	M.J.
G	12-06-26	ISSUED FOR CDC	M.J.
F	14-05-26	ISSUED FOR CDC	M.J.
E	05-03-26	ISSUED FOR CDC	M.J.
D	13-02-26	ISSUED FOR CDC	M.J.
C	08-12-25	ISSUED FOR CDC	M.J.

AMENDMENTS

DRAWN : M.J. DATE: 31-08-26
DESIGNED : J.M. REVISION DATE:
QA CHECK : J.M. 31-08-26

APPROVED BY :

ALI AL - OBAIDI
MSc, BSc, MIEAust, CPEng, NER

RPEQ: 28316
NPER: 5358554

ISSUE TYPE :
CDC

SHEET NUMBER :
STR020

SHEET SIZE: A3
REVISION: J

NOTE: THE DESIGN AND DETAILS SHOWN ON THESE DRAWINGS ARE APPLICABLE TO THIS PROJECT ONLY AND MAY NOT BE REPRODUCED IN WHOLE OR IN PART OR BE USED FOR ANY OTHER PROJECT OR PURPOSE WITHOUT THE WRITTEN PERMISSION OF MODULAR ENGINEERS WITH WHOM COPYRIGHT RESIDES.

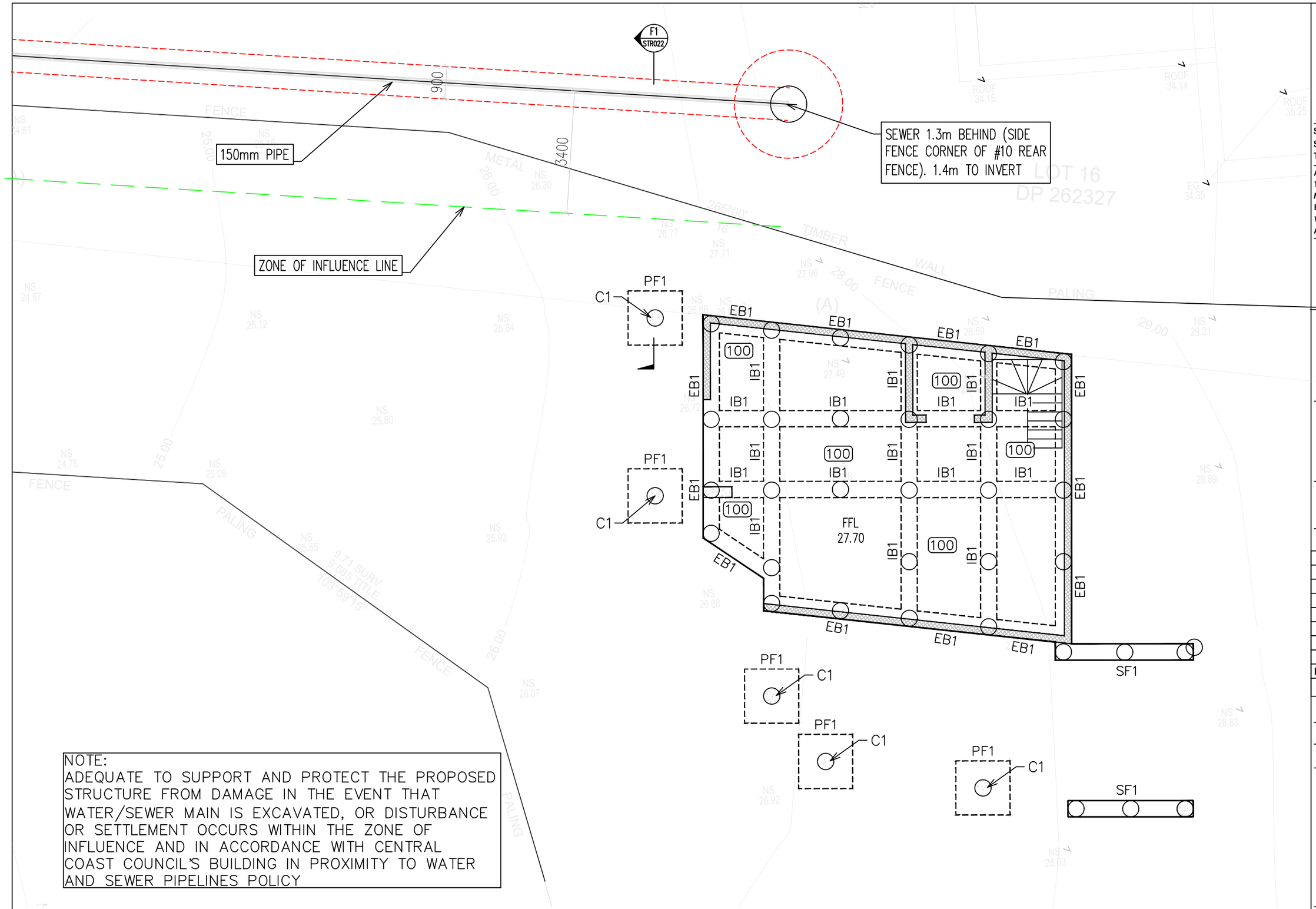

NOTE:
ADEQUATE TO SUPPORT AND PROTECT THE PROPOSED STRUCTURE FROM DAMAGE IN THE EVENT THAT WATER/SEWER MAIN IS EXCAVATED, OR DISTURBANCE OR SETTLEMENT OCCURS WITHIN THE ZONE OF INFLUENCE AND IN ACCORDANCE WITH CENTRAL COAST COUNCIL'S BUILDING IN PROXIMITY TO WATER AND SEWER PIPELINES POLICY

PRINT IN COLOUR

MODULAR ENGINEERS P/L

Structural Engineering | Civil Engineering
Stormwater Engineering | Flood Engineering
Traffic Engineering | Temporary works

ABN : 66 646 960 929
TEL. : 02 873 08473
MOB. : 04 208 98999
EMAIL : info@modularengineers.com.au
WEBSITE : www.modularengineers.com.au
ADDRESS : 6/7 Parkes St., Parramatta NSW 2150

ARCHITECT:
GEGE CONSTRUCTION PTY LTD

PROJECT TITLE :
PROPOSED DUAL OCCUPANCY

SHEET NAME :
SEWER PROTECTION PLAN

PROJECT NUMBER:
STR0162-2025

INTERNAL REVISIONS :

ISSUE	DATE	DESCRIPTION	BY
J	31-08-26	ISSUED FOR CDC	M.J.
I	18-08-26	ISSUED FOR CDC	M.J.
H	12-06-26	ISSUED FOR CDC	M.J.
G	12-06-26	ISSUED FOR CDC	M.J.
F	14-05-26	ISSUED FOR CDC	M.J.
E	05-03-26	ISSUED FOR CDC	M.J.
D	13-02-26	ISSUED FOR CDC	M.J.
C	08-12-25	ISSUED FOR CDC	M.J.

AMENDMENTS

DRAWN : M.J. DATE: 31-08-26
DESIGNED : J.M. REVISION DATE:
QA CHECK : J.M. 31-08-26

APPROVED BY :

ALI AL - OBAIDI
MSc, BSc, MIEAust, CPEng, NER

RPEQ: 28316
NPER: 5358554

ISSUE TYPE :
CDC

SHEET NUMBER :
STR021

SHEET SIZE: A3
REVISION: J

NOTE: THE DESIGN AND DETAILS SHOWN ON THESE DRAWINGS ARE APPLICABLE TO THIS PROJECT ONLY AND MAY NOT BE REPRODUCED IN WHOLE OR IN PART OR BE USED FOR ANY OTHER PROJECT OR PURPOSE WITHOUT THE WRITTEN PERMISSION OF MODULAR ENGINEERS WITH WHOM COPYRIGHT RESIDES.

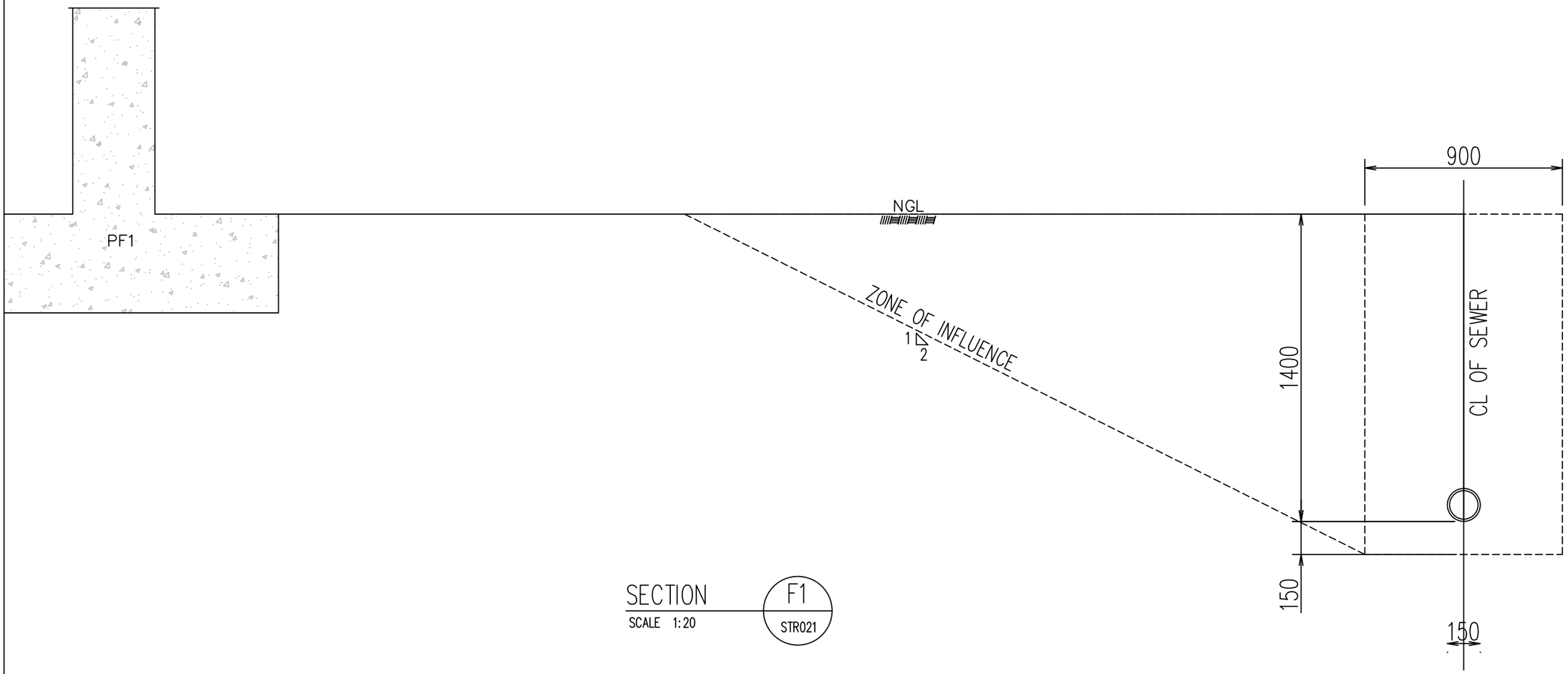

SECTION F1 STR021
SCALE 1:20

NOTE:
ADEQUATE TO SUPPORT AND PROTECT THE PROPOSED STRUCTURE FROM DAMAGE IN THE EVENT THAT WATER/SEWER MAIN IS EXCAVATED, OR DISTURBANCE OR SETTLEMENT OCCURS WITHIN THE ZONE OF INFLUENCE AND IN ACCORDANCE WITH CENTRAL COAST COUNCIL'S BUILDING IN PROXIMITY TO WATER AND SEWER PIPELINES POLICY

PRINT IN COLOUR

MODULAR ENGINEERS P/L

Structural Engineering | Civil Engineering
Stormwater Engineering | Flood Engineering
Traffic Engineering | Temporary works

ABN : 66 646 960 929
TEL. : 02 873 08473
MOB. : 04 208 98999
EMAIL : info@modularengineers.com.au
WEBSITE : www.modularengineers.com.au
ADDRESS : 6/7 Parkes St., Parramatta NSW 2150

ARCHITECT:
GEGE CONSTRUCTION PTY LTD

PROJECT TITLE :
PROPOSED DUAL OCCUPANCY

SHEET NAME :
SEWER PROTECTION DETAIL

PROJECT NUMBER:
STR0162-2025

INTERNAL REVISIONS :

ISSUE	DATE	DESCRIPTION	BY
J	31-08-26	ISSUED FOR CDC	M.J.
I	18-08-26	ISSUED FOR CDC	M.J.
H	12-06-26	ISSUED FOR CDC	M.J.
G	12-06-26	ISSUED FOR CDC	M.J.
F	14-05-26	ISSUED FOR CDC	M.J.
E	05-03-26	ISSUED FOR CDC	M.J.
D	13-02-26	ISSUED FOR CDC	M.J.
C	08-12-25	ISSUED FOR CDC	M.J.

AMENDMENTS

DRAWN : M.J. DATE: 31-08-26
DESIGNED : J.M. REVISION DATE:
QA CHECK : J.M. 31-08-26

APPROVED BY :

ALI AL - OBAIDI
MSc, BSc, MIEAust, CPEng, NER

RPEQ: 28316
NPER: 5358554

ISSUE TYPE :
CDC

SHEET NUMBER :
STR022

SHEET SIZE: A3
REVISION: J

NOTE: THE DESIGN AND DETAILS SHOWN ON THESE DRAWINGS ARE APPLICABLE TO THIS PROJECT ONLY AND MAY NOT BE REPRODUCED IN WHOLE OR IN PART OR BE USED FOR ANY OTHER PROJECT OR PURPOSE WITHOUT THE WRITTEN PERMISSION OF MODULAR ENGINEERS WITH WHOM COPYRIGHT RESIDES.