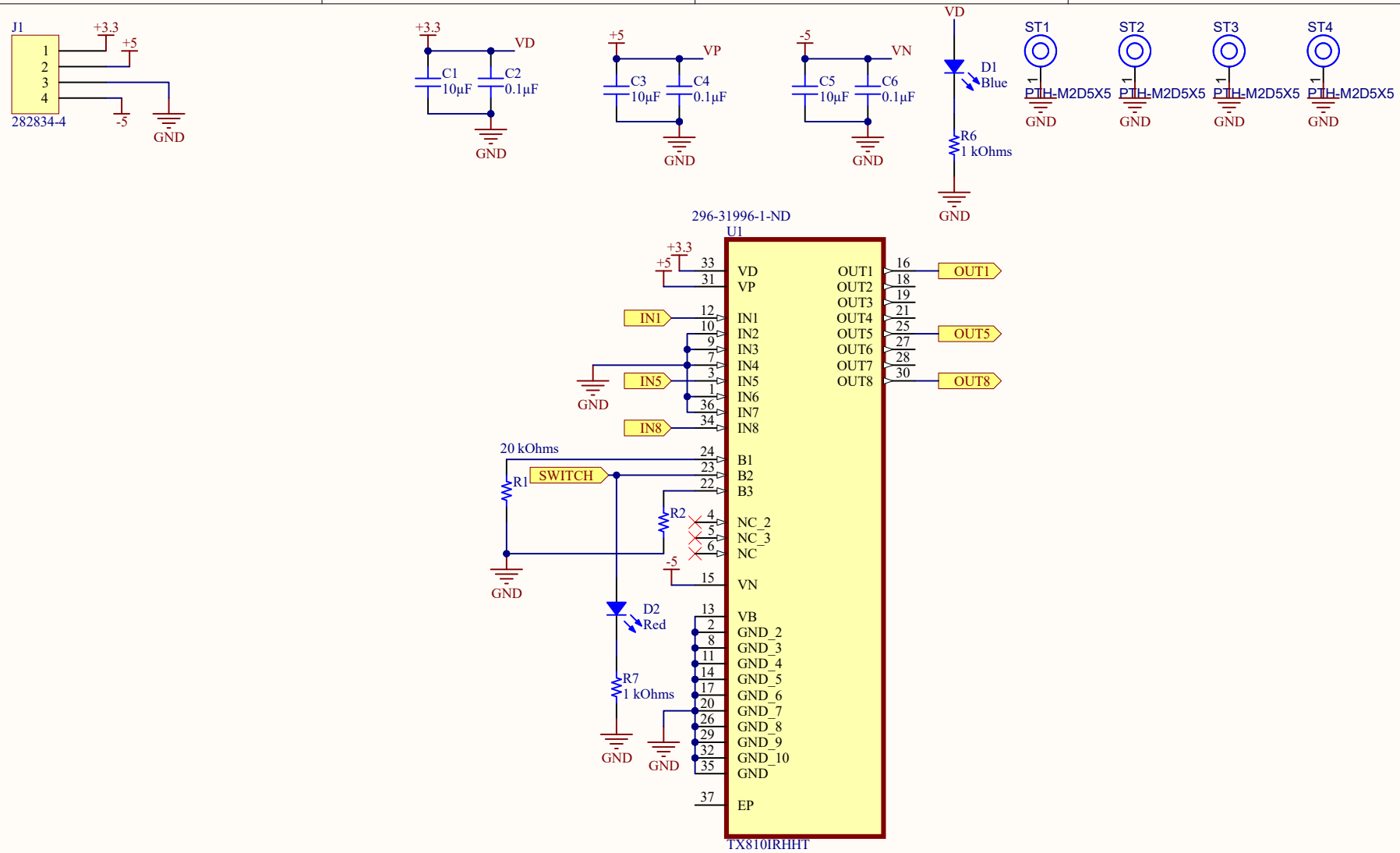

(c) BMM Laboratory	ONLY FOR INTERNAL REVIEW
Project: Blood Flow Ultrasound Sensor Project	Variant: [No Variations]
Page Contents: Ultrasound_Switch.SchDoc	Checked by: -
Size: A	DWG No: 0001
Revision: V1I1	
Date: 2023-02-28 bmm.kaist.ac.kr	Sheet 1 of 2