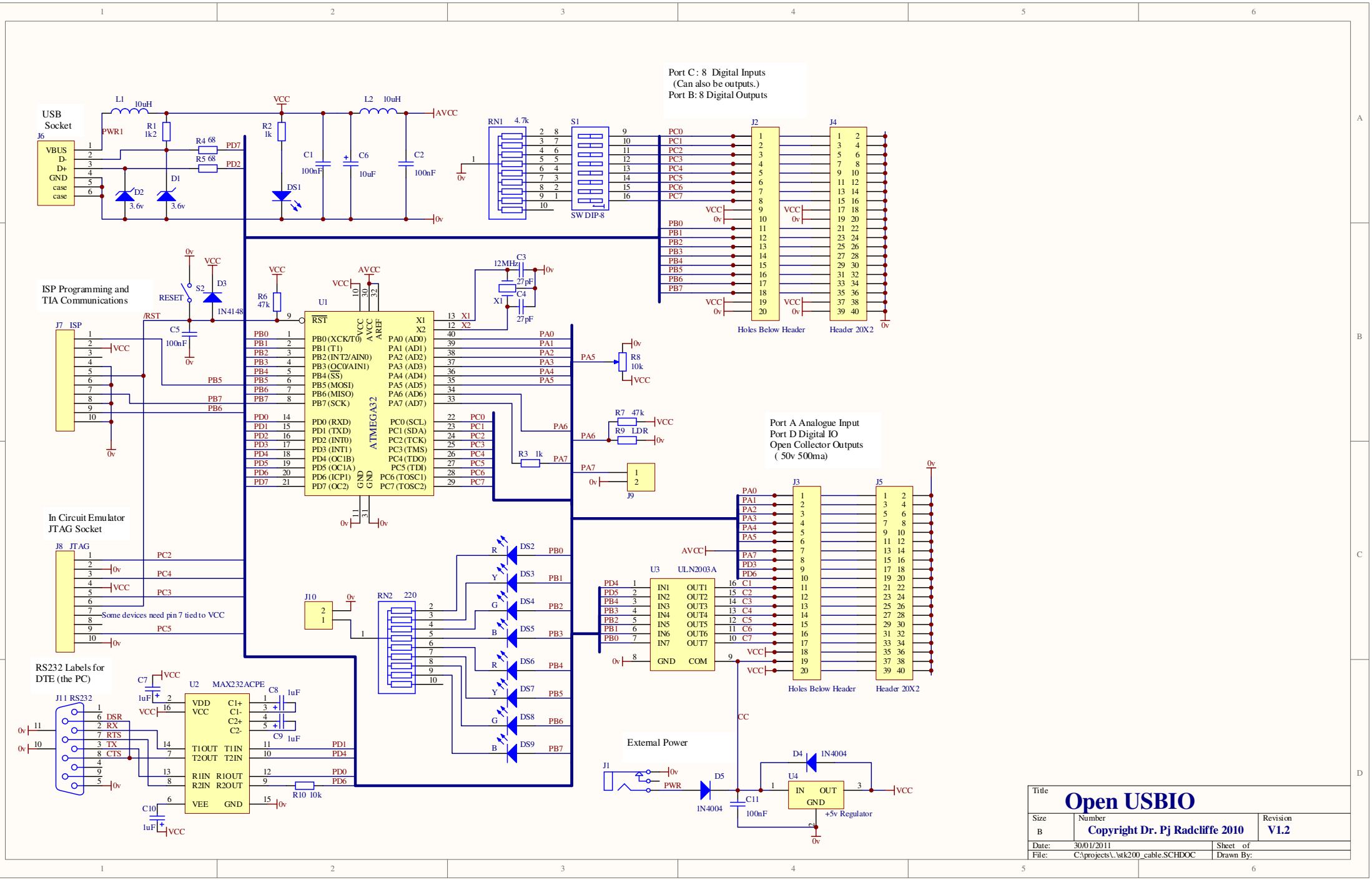
USB Socket
J6
VBUS
D-
D+
GND
case
case
L1 10uH
PWR1
R1 1k2
R4 68
R5 68
PD7
PD2
D2 3.6v
D1 3.6v
VCC
R2 1k
DS1
C1 100nF
C6 10uF
L2 10uH
C2 100nF
AVCC
0v
RN1 4.7k
S1
SW DIP-8
Port C : 8 Digital Inputs
(Can also be outputs.)
Port B: 8 Digital Outputs
J2
J4
Holes Below Header
Header 20X2
ISP Programming and
TIA Communications
J7 ISP
RESET
S2
D3
1N4148
/RST
C5 100nF
R6 47k
U1
ATMEGA32
RST
VCC
AVCC
AREF
GND
PB0 (XCK/T0)
PB1 (T1)
PB2 (INT2/AIN0)
PB3 (OC0/AIN1)
PB4 (SS)
PB5 (MOSI)
PB6 (MISO)
PB7 (SCK)
PD0 (RXD)
PD1 (TXD)
PD2 (INT0)
PD3 (INT1)
PD4 (OC1B)
PD5 (OC1A)
PD6 (ICP1)
PD7 (OC2)
PA0 (AD0)
PA1 (AD1)
PA2 (AD2)
PA3 (AD3)
PA4 (AD4)
PA5 (AD5)
PA6 (AD6)
PA7 (AD7)
PC0 (SCL)
PC1 (SDA)
PC2 (TCK)
PC3 (TMS)
PC4 (TDO)
PC5 (TDI)
PC6 (TOSC1)
PC7 (TOSC2)
X1
X2
12MHz
C3 27pF
C4 27pF
R8 10k
R7 47k
R9 LDR
R3 1k
J9
Port A Analogue Input
Port D Digital IO
Open Collector Outputs
(50v 500ma)
J3
J5
Holes Below Header
Header 20X2
In Circuit Emulator
JTAG Socket
J8 JTAG
Some devices need pin 7 tied to VCC
J10
RN2 220
DS2
DS3
DS4
DS5
DS6
DS7
DS8
DS9
U3 ULN2003A
IN1
IN2
IN3
IN4
IN5
IN6
IN7
GND
OUT1
OUT2
OUT3
OUT4
OUT5
OUT6
OUT7
COM
RS232 Labels for
DTE (the PC)
J11 RS232
DSR
RX
RTS
TX
CTS
U2 MAX232ACPE
VDD
VCC
C1+
C1-
C2+
C2-
T1OUT
T2OUT
T1IN
T2IN
R1IN
R2IN
R1OUT
R2OUT
VEE
GND
C7 1uF
C8 1uF
C9 1uF
C10 1uF
R10 10k
External Power
J1
PWR
D5 1N4004
D4 1N4004
U4
IN
OUT
GND
+5v Regulator
C11 100nF
CC
Title
Open USBIO
Size
B
Number
Copyright Dr. Pj Radcliffe 2010
Revision
V1.2
Date: 30/01/2011
Sheet of
File: C:\projects\..\stk200_cable.SCHDOC
Drawn By: