19.75

CMPE 127 Midterm Exam (Version B)
Fall 2014

First Name [redacted] **Last Name:** [redacted]

This test has total 20 points. Please be sure to provide a step-by-step result for the questions that involve calculation.

1. (5 points) Answer the following questions:

1.1 (1 point) What is the function of special purpose registers for ARM CPU (e.g., LPC1769 CPU in the class), what is SSP1CR0, how many bits are functional usable for this register?

1.1) Initialization & configuration control operation of peripherals
SSP1CR0 - Special Purpose Control Register ϕ - 32 bits? _0.25

1.2 (1 point) Given the following design requirement (technical specifications), use datasheet to fill in a binary pattern for (1) SPI interface; (2) 8 bit data packets; and (3) use other default clock settings to realize this interfaces (suppose SCR=128).

31	30	29	28	27	26	25	24	23	22	21	20	19	18	17	16	15	14	13	12	11	10	9	8	7	6	5	4	3	2	1	0
0	0	0	0	0	0	0	0	0	0	0	0	0	0	0	0	1	0	0	0	0	0	0	0	0	0	0	0	0	1	1	1

SCR

1.3 (1 point) Suppose SPI Flash serial interface is designed with 66Mhz clock rate, calculate with this rate what is the highest possible data read rate? Can it be used for 104x768 8bit (5 frames per second) video display?

$T = \frac{1}{66 \times 10^6} = \frac{1}{66}\mu s = 0.015\mu s = 15 ns = 15 \times 10^{-9}$ bps $= 15000$ Mbps

$104 \times 768 \times 5$

$2^7 \cdot 2^{10} \cdot 2^2 = 2^{19} = 2^9 \cdot 2^{10} = 512$ Mbps

YES, it can be used.

1.4 (1 point) In your prototyping board power unit design, LED is needed when the power connection is on, design a simple circuit to realize this function and calculate the resistor value if needed (Suppose I = 8mA)?

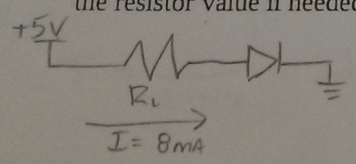

Assuming $= V_{LED} = 0.7$ V

$R_L = \frac{5 - V_{LED}}{8 \text{ mA}} = \frac{5 - 0.7V}{8 \times 10^{-3}} = 537.5\ \Omega$

1.5 (1 point) How many segment registers are there for Intel 8086, name each of them, what is their size? Suppose you have 1f50:0100, identify segment address? Logical address? Find physical address?

4 Segment Registers = Ax, Bx, Cx, Dx } 16 bits each

4.75/5

1F50:0100 → segment address = 1F50
logical address = 0100
physical address = 1F500
+0100
= 1F600

2. (5 points), Complete CPU to SPI serial flash interface design by answering the following questions:

2.1 (1 point) Name each of the SPI pin of the CPU for interface design?

2.2 (1 point) Design CPU to SPI serial flash interface by drawing detailed schematics, be sure to name each pin functionality (no pin number needed)?

2.3 (2 points) Draw a protocol timing diagram for SPI buffer write operation, use dashed line to divide them to 3 functional segments according to the SPI interface protocol, and explain the function for each segment?

2.4 (1 point) What is the hex command for manufacturer ID and device ID read, calculate the time interval for this command if SPI is operating at 1 MHz speed.

2.1) MOSI, MISO, SCK, nCS
3+1

(Master Output Slave Input
Master Input Slave Output
serial Clock
chip Select)

2.2)

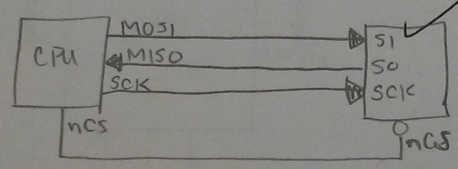

2.3)

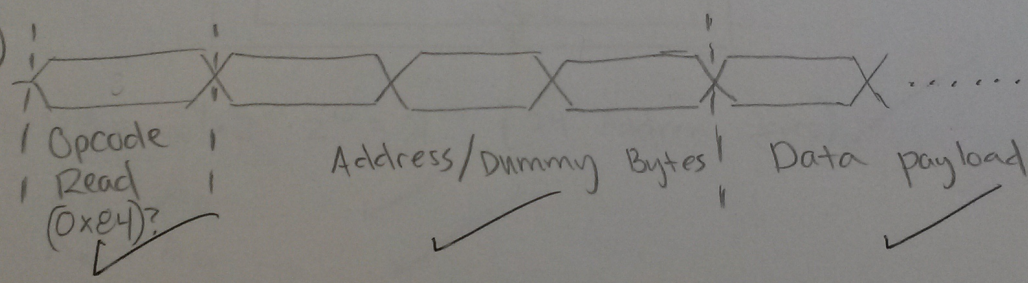

2.4) Manuf. ID = 0x9f

$T = \frac{1}{MHz} = \frac{1}{10^6} = 1\,\mu s$

5/5

0x9F = 8 bits ∴ $8 \cdot 1\,\mu s = 8\,\mu s$

3. (5 points) Given below is a unfinished ROM memory interface design, suppose CPU is on the left and ROM is on the right, answer the following questions,

3.1 (1 point) Suppose the ROM is 16 MB (8 bit data width), what is Ax=? And Am=?

3.2 (3 points) If 64 MB ROM is to be designed with duplication of four ROMs above, find Ax=? And Am=?

3.3 (1 point) Complete the schematic below for 3.1 design with control signals, be sure to design the control signal with proposer active high or active low.

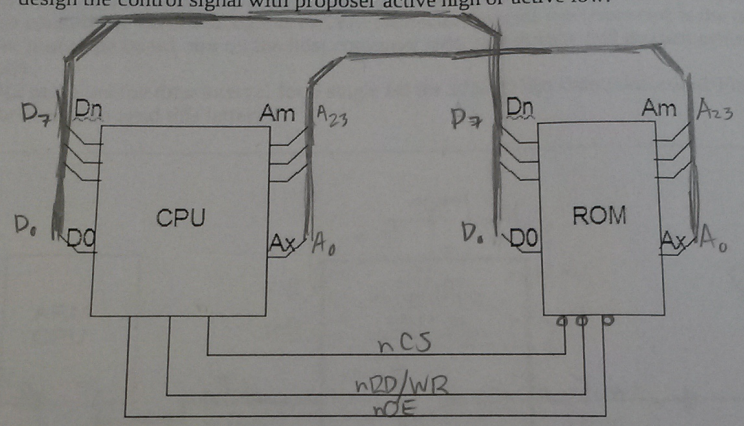

3.1) 16MB = $2^4 \cdot 2^{10} \cdot 2^{10} = 2^{24}$ (24 Address bits)

$Ax = A_0$

$Am = A_{23}$

3.2) 64 MB (4 x 16MB Roms)

$2^6 \cdot 2^{10} \cdot 2^{10} = 2^{26}$ (26 address bits)

$A_{25} \ldots A_2 \cancel{A_1} \cancel{A_0}$

$Ax = A_2$

$Am = A_{25}$

5/5

4. (5 points) RS232 serial interface is one of the key interfaces for debugging the microprocessor system, based on the system block diagram below, answer the following questions:

4.1 (1 pt) Suppose a letter with hex 0xF3 to be send, what is the first bit (LSB) voltage value at CPU TX? And what is the voltage value at MAX T_out?

4.2(2 pts) complete the un-finished design below (a) draw the pins with pin number for Tx and Rx of the CPU; (b) form a serial data bus by connecting these pins to MAX232; (c) then connect the MAX232 output to DB9 connector (assume the connector is the one on your prototype board, not on the host computer side, and assume null modem cable is used).

4.3(2 pts) Find the time interval for a single bit for 115200 bps communication? Find the time needed to send this letter?

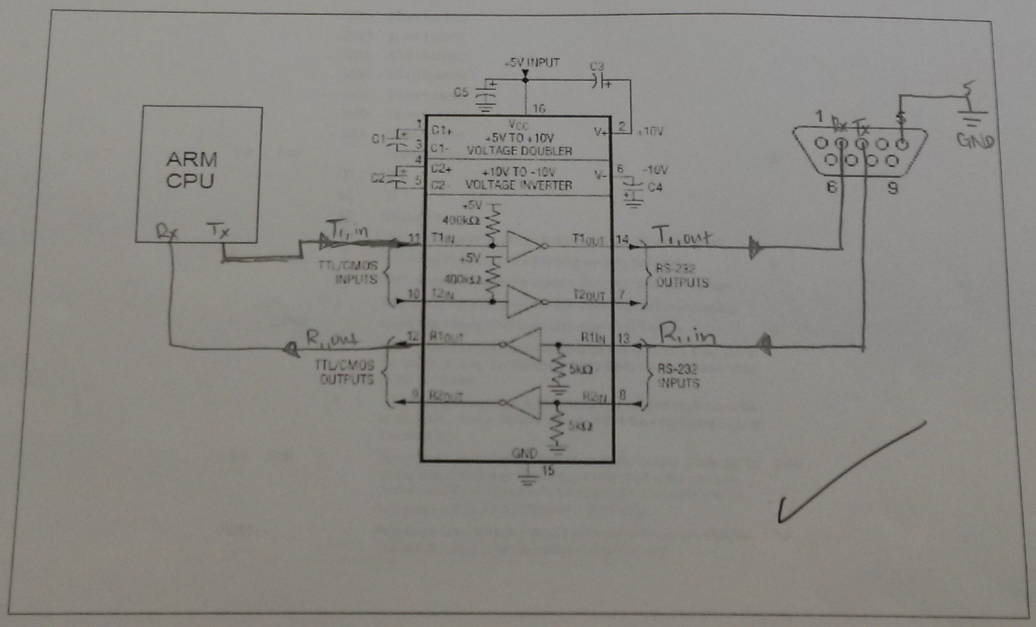

4.1) 0xF3

0	0xF3	1

LSB = Logic "0" = +2.5 to +5.0 V (TTL)

0 V (CMOS)

MSB

CPU TX = 0 V (CMOS)

MAX T_OUT = +5 V (TTL)

5/5

4.3) $T = \frac{1}{115200} = 8.68 \times 10^{-6} = 8.68\ \mu s$ (per bit)

good

Time needed for 0xF3 = 10 · 8.68 μs = 80.68 μs

10 bits from payload

per bit