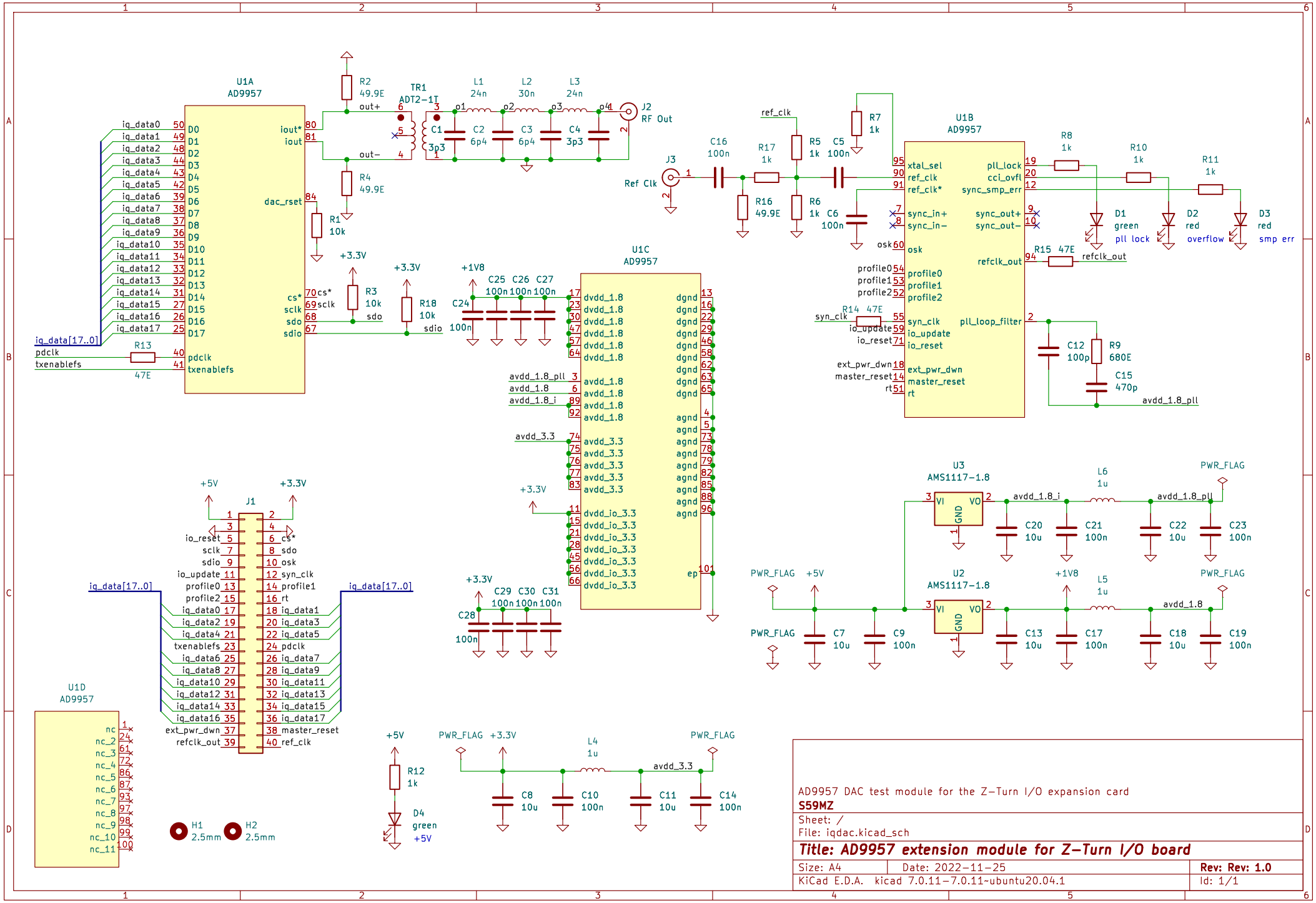

AD9957 DAC test module for the Z-Turn I/O expansion card

S59MZ

Sheet: /

File: iqdac.kicad_sch

Title: AD9957 extension module for Z-Turn I/O board

Size: A4	Date: 2022-11-25	**Rev: Rev: 1.0**
KiCad E.D.A. kicad 7.0.11-7.0.11~ubuntu20.04.1		Id: 1/1