1. BearingFit

A bearing fit describes how a bearing is mounted onto a shaft and inside a housing. It is critical for allowing smooth rotation while supporting loads.

- *How it works: Typically, the ring that rotates (usually the inner ring on the shaft) gets a tight interference fit so it doesn't spin out of place. The stationary ring (usually the outer ring in the housing) gets a slightly looser clearance fit to allow for thermal expansion and easier assembly.*

This shows how a bearing is mounted on a shaft or in a housing with specific tolerance fits (often transition or interference for the inner/outer rings).

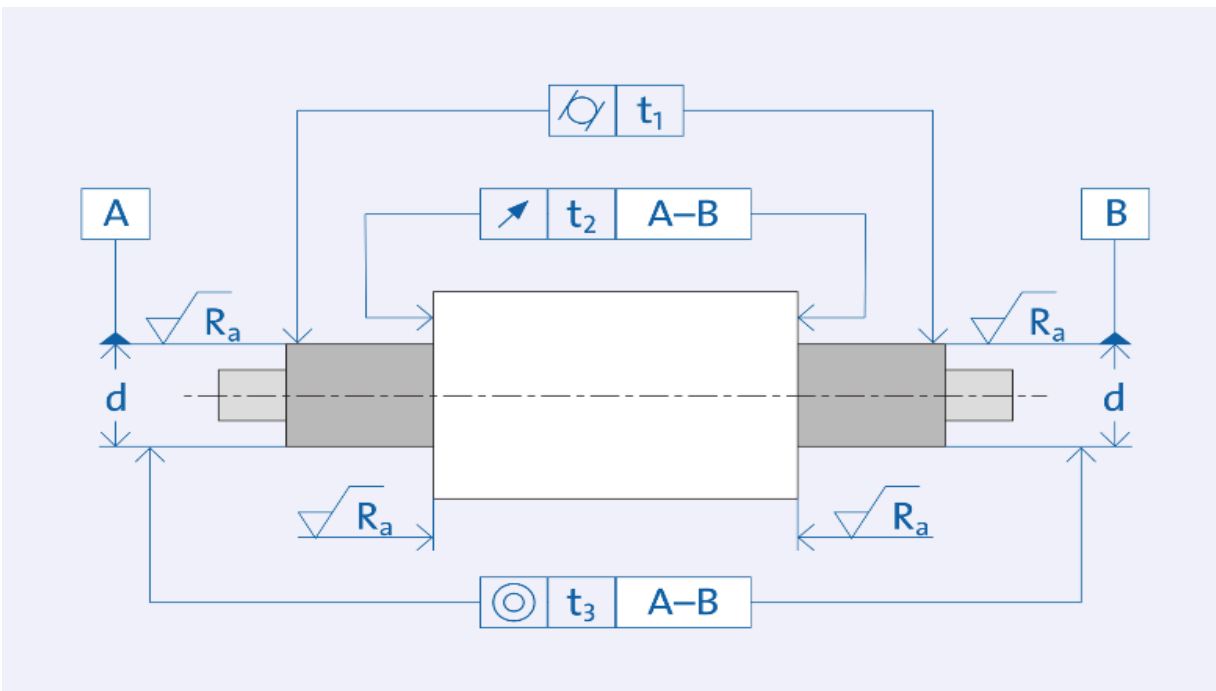

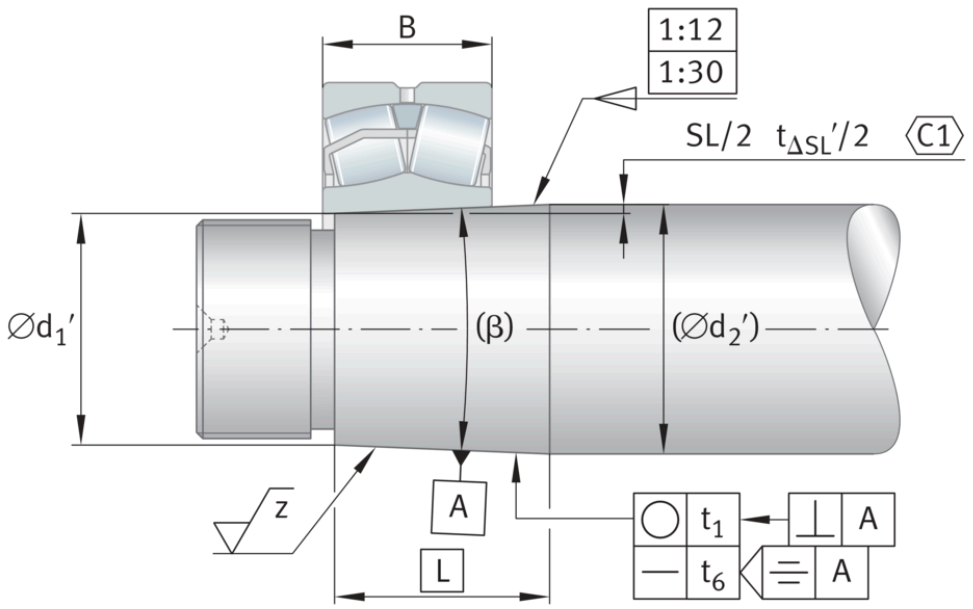

C1 $SL/2 = (d_{2'current} - d_{1'current})/2$

2. ThreadedConnection

This is the standard method for temporarily joining two or more components using helical ridges.

- *How it works: An external thread (like a screw or bolt) engages with an internal thread (like a nut or tapped hole). As the bolt is tightened, it stretches slightly, acting like a stiff spring that clamps the parts together through tension and friction.*

Common bolted or screwed joint designs, showing fasteners transferring loads.

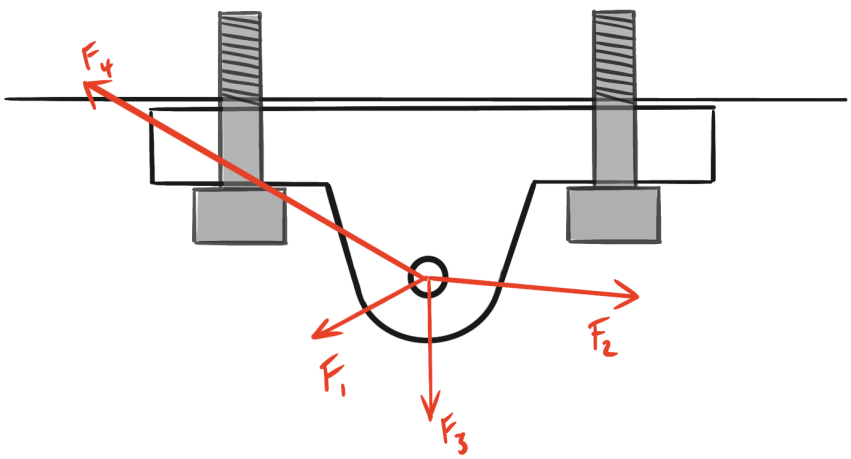

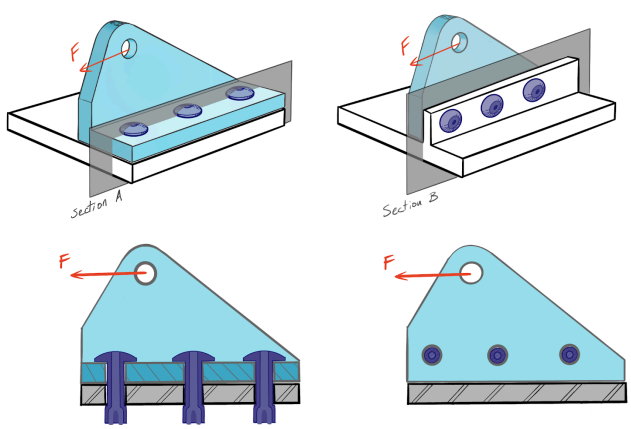

3. KeyKeyway

This pattern is used to securely connect a rotating element (like a gear or pulley) to a shaft to transmit torque.

- *How it works: A slot (the keyway) is cut into both the shaft and the hub of the mating part. A solid piece of metal (the key) is inserted into these slots, locking the two parts together rotationally so they spin as one solid unit.*

A rectangular or square key fits into matching keyways (or keyseats) on a shaft and hub to transmit torque.

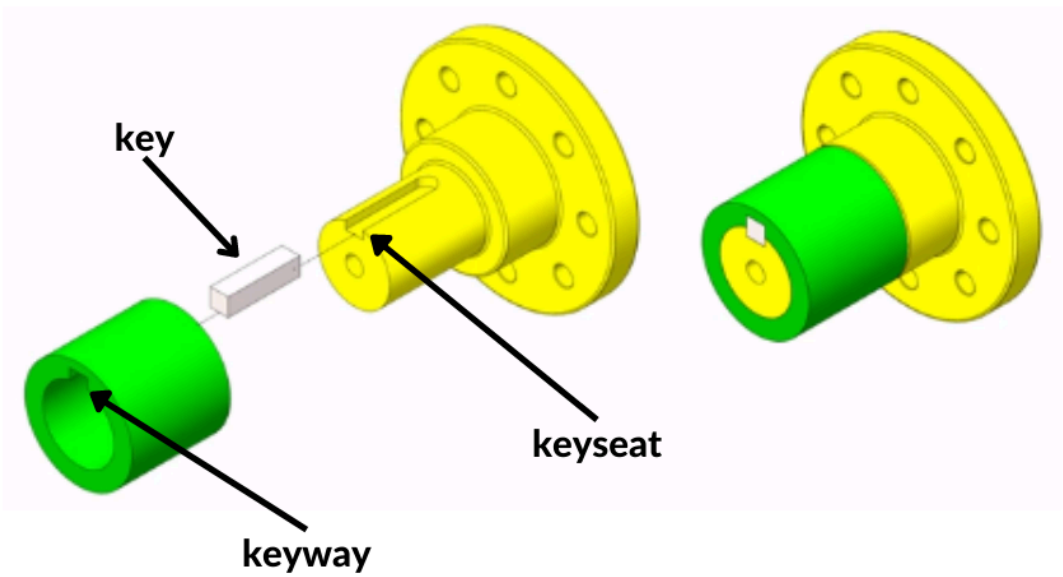

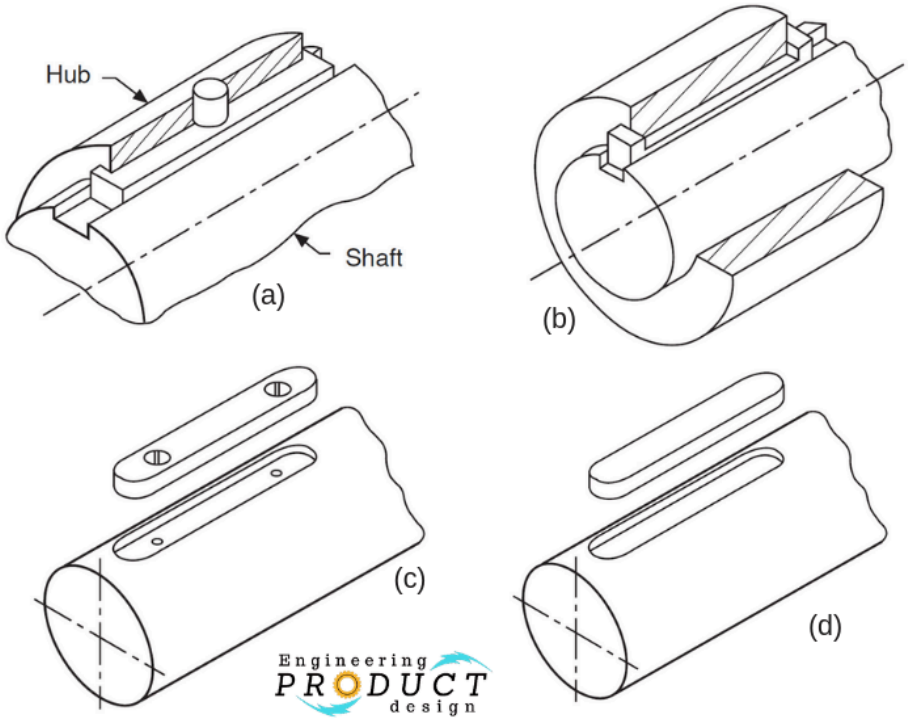

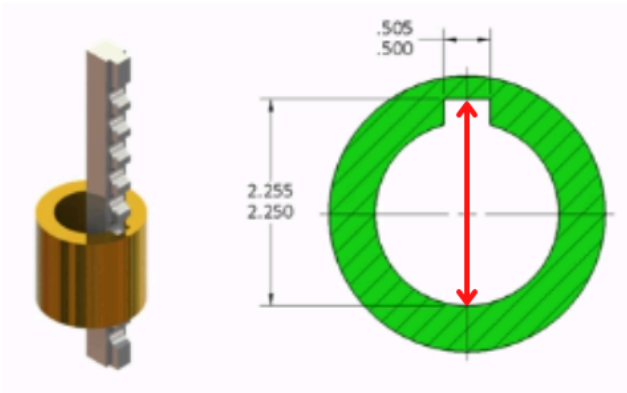

Keyway

Depth measured from opposite side of bore

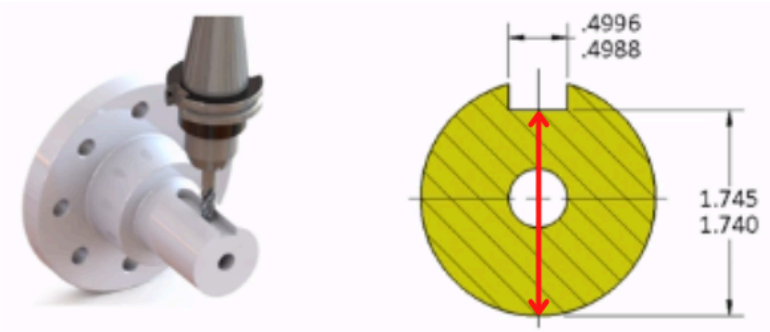

Keyseat

Depth measured from opposite side of shaft

4. AlignmentFeature

Alignment features ensure that two parts mate in the exact right position before they are permanently or semi-permanently fastened. Fasteners like bolts are meant for clamping, not aligning.

- *How it works: This is usually achieved using dowel pins, locating bosses, or matching steps/registers. One part has protruding features that slot perfectly into corresponding holes or recesses in the mating part, securing the X and Y positioning.*

Typically uses dowel pins, diamond pins, or locating features for precise positioning of mating parts.

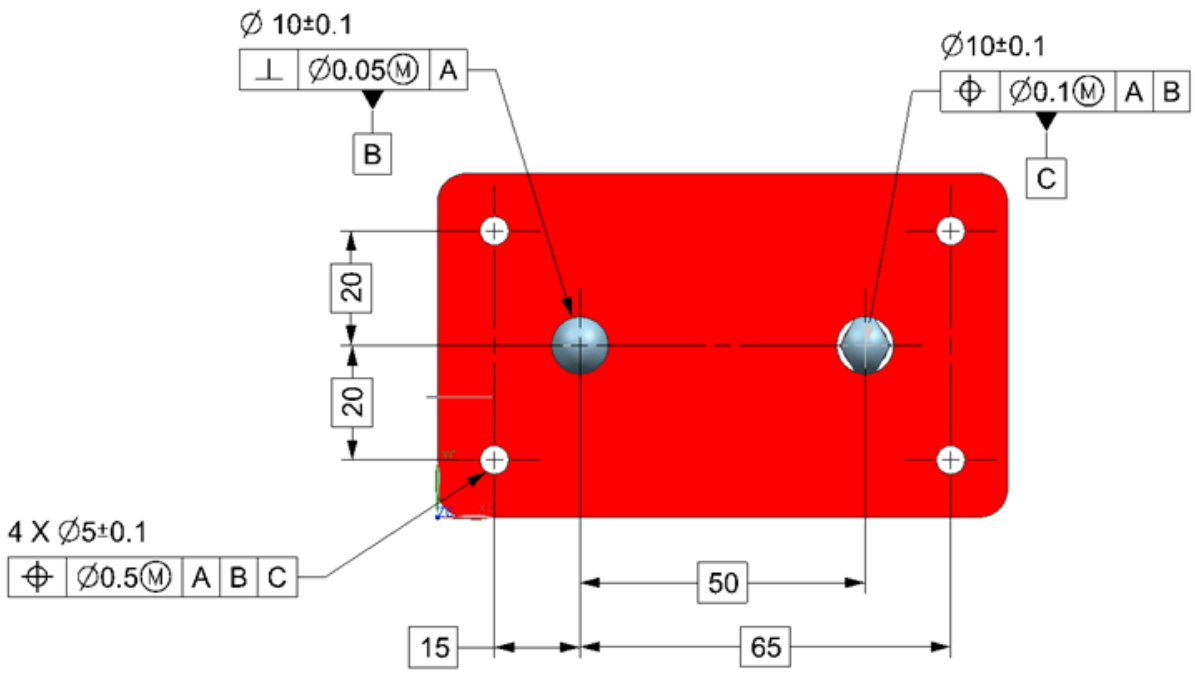

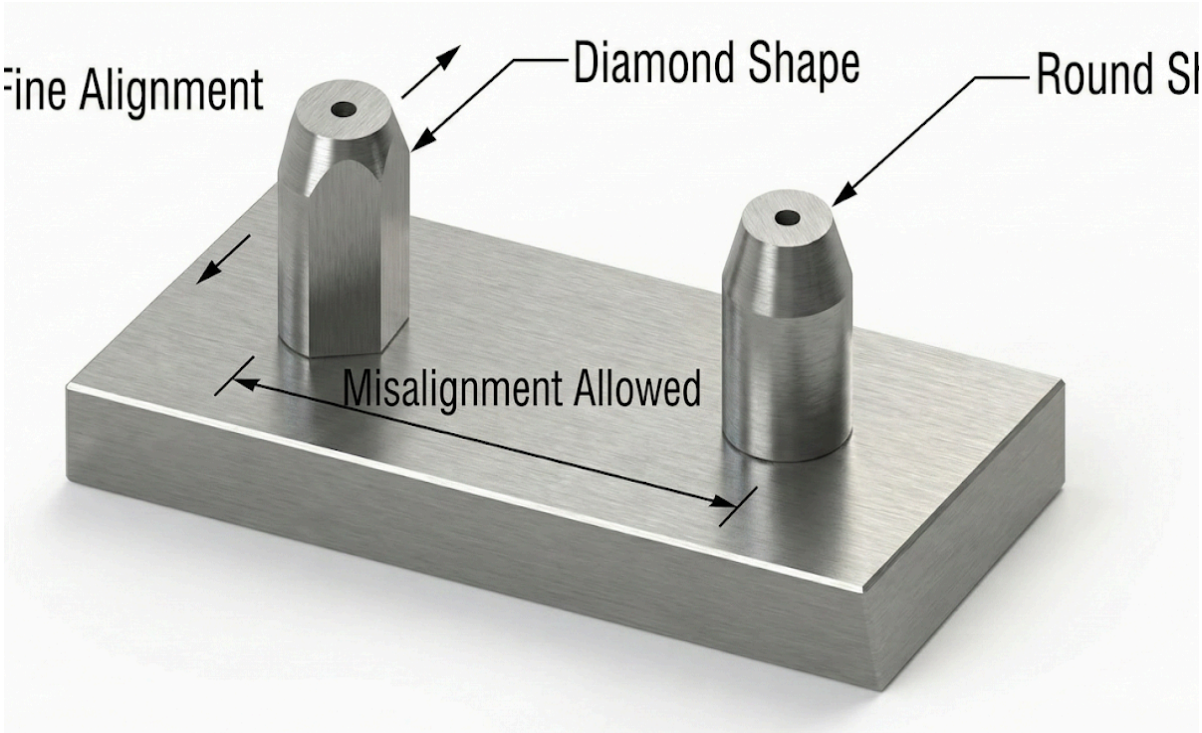
Fine Alignment
Diamond Shape
Round Sl
Misalignment Allowed

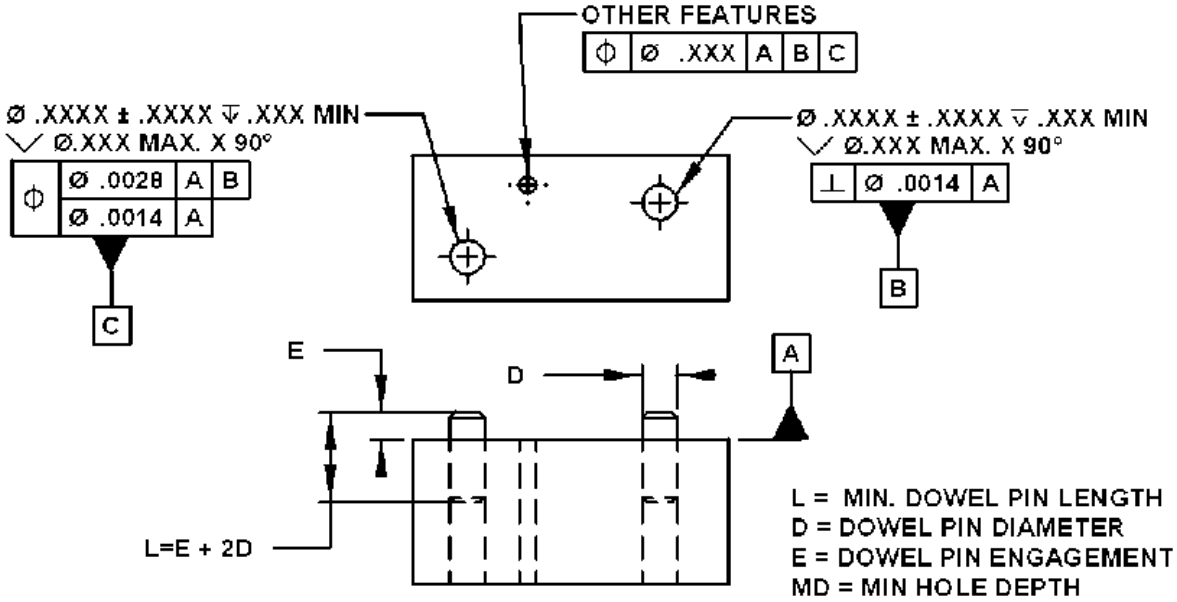
OTHER FEATURES
Φ Ø .XXX A B C
Ø .XXXX ± .XXXX ↧ .XXX MIN
Ø.XXX MAX. X 90°
Φ Ø .0028 A B
Ø .0014 A
C
Ø .XXXX ± .XXXX ↧ .XXX MIN
Ø.XXX MAX. X 90°
⊥ Ø .0014 A
B
E
D
A
L=E + 2D
L = MIN. DOWEL PIN LENGTH
D = DOWEL PIN DIAMETER
E = DOWEL PIN ENGAGEMENT
MD = MIN HOLE DEPTH

5. SealingFeature

Sealing features are designed into parts to contain fluids or gases and prevent leaks under pressure.

- *How it works: The most common mechanical sealing pattern is the O-ring groove. A specific rectangular or dovetail groove is cut into one part to house an elastomeric ring. When the mating part is clamped down, the O-ring is compressed by a specific percentage, filling the microscopic gaps between the metal surfaces.*

Often an O-ring, gasket, or mechanical face seal to prevent fluid leakage.

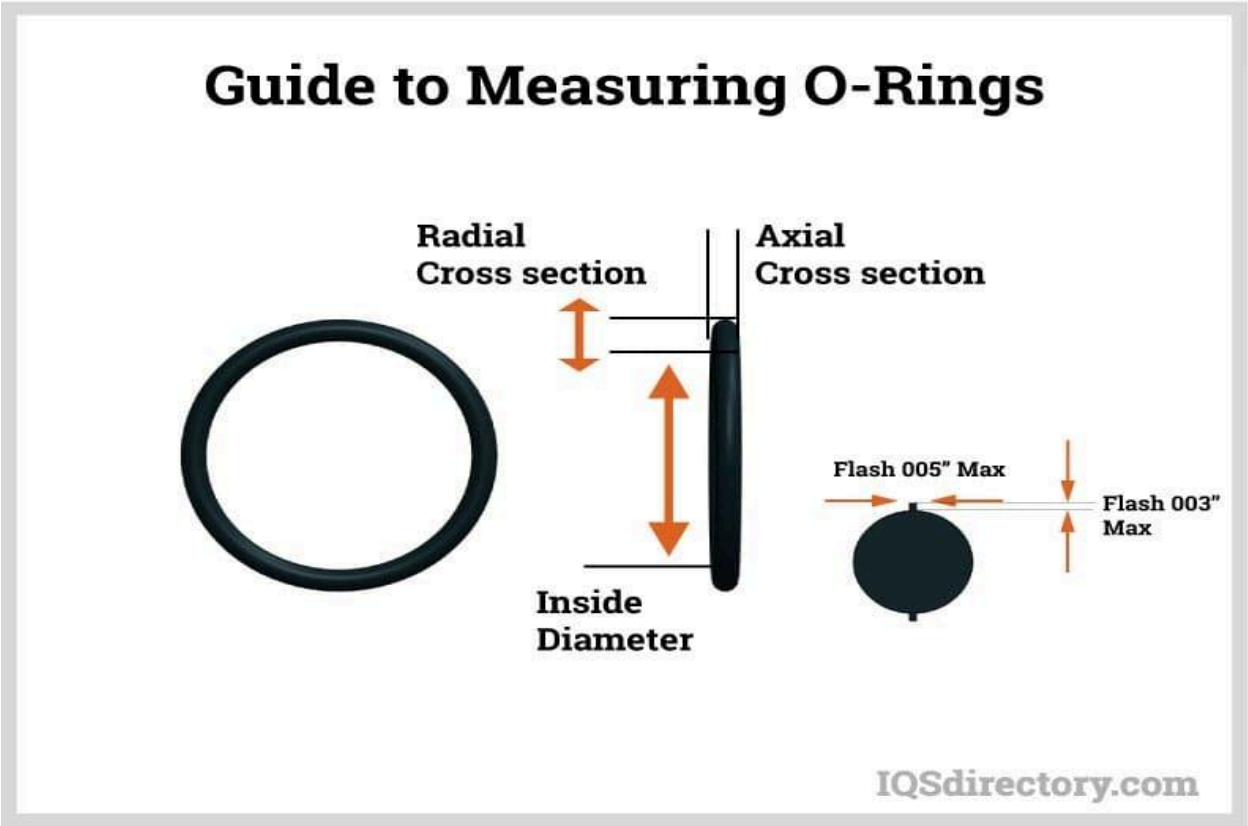

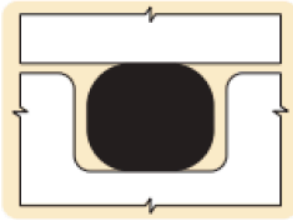

Figure 1-4: O-Ring Installed

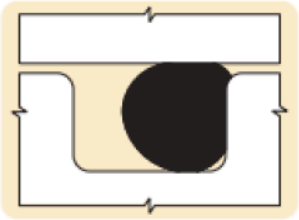

Figure 1-5: O-Ring Under Pressure

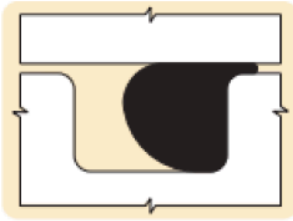

Figure 1-6: O-Ring Extruding

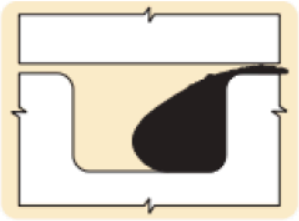

Figure 1-7: O-Ring Failure

Image credit - Parker O-ring Handbook

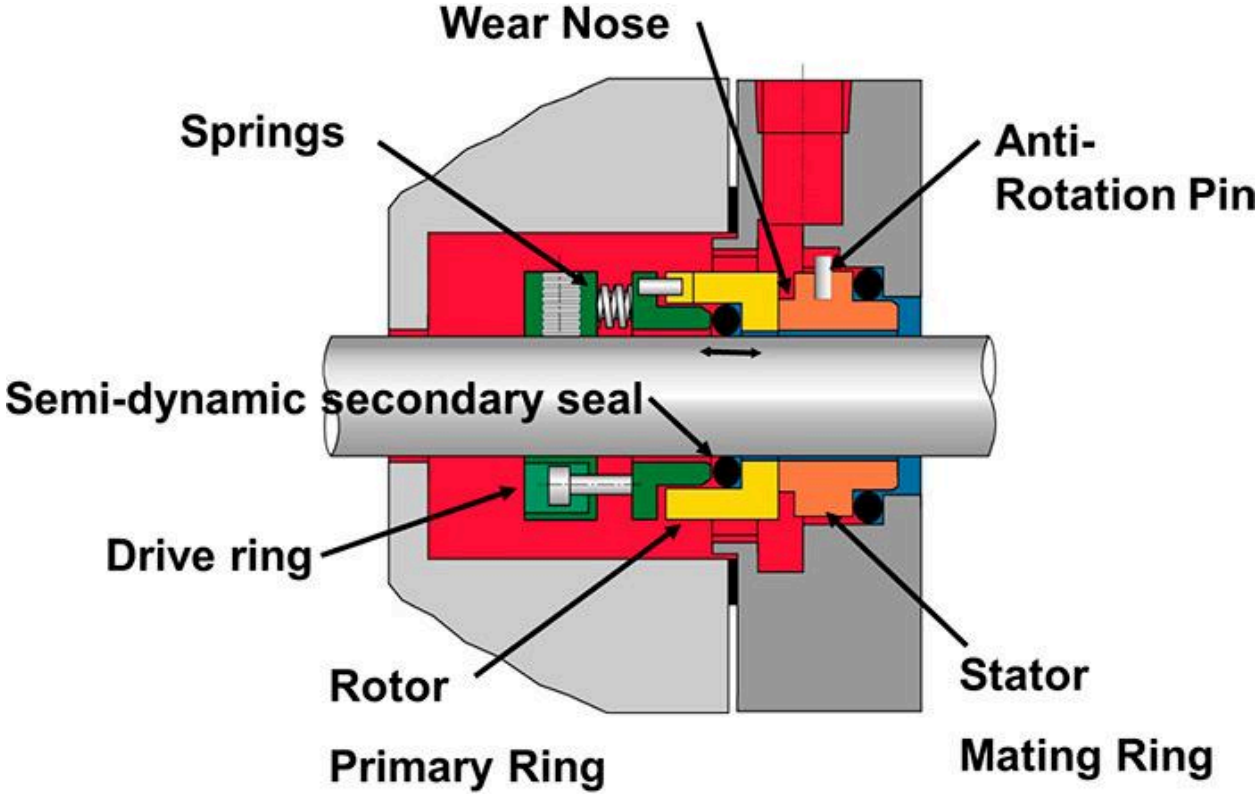

6. PressFit (Interference Fit)

A press fit joins two parts purely through friction, without the need for threads, keys, or adhesives.

- *How it works: The inner component (like a pin) is manufactured to be fractionally larger than the hole of the outer component it is going into. High force is used to press them together (sometimes utilizing heating or cooling to expand/shrink the metals). The resulting elastic deformation locks them tightly together.*

The shaft diameter is slightly larger than the hole, requiring force to assemble for a tight, permanent connection.

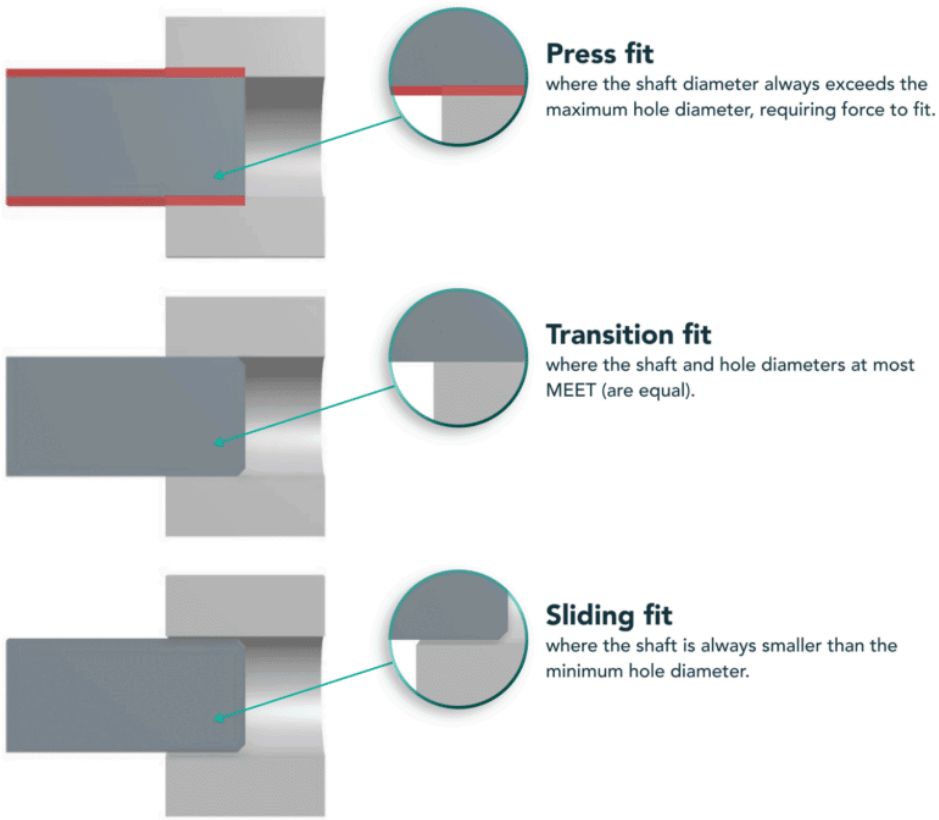

7. SlidingFit (Clearance Fit)

A sliding fit is designed to allow intentional, smooth, unhindered movement between two parts.

- *How it works: The inner component (like a shaft or piston) is manufactured to be strictly smaller than the outer component's opening (like a sleeve or cylinder). The small gap (clearance) allows for linear sliding or free rotation, and often provides space for a thin layer of lubricant.*
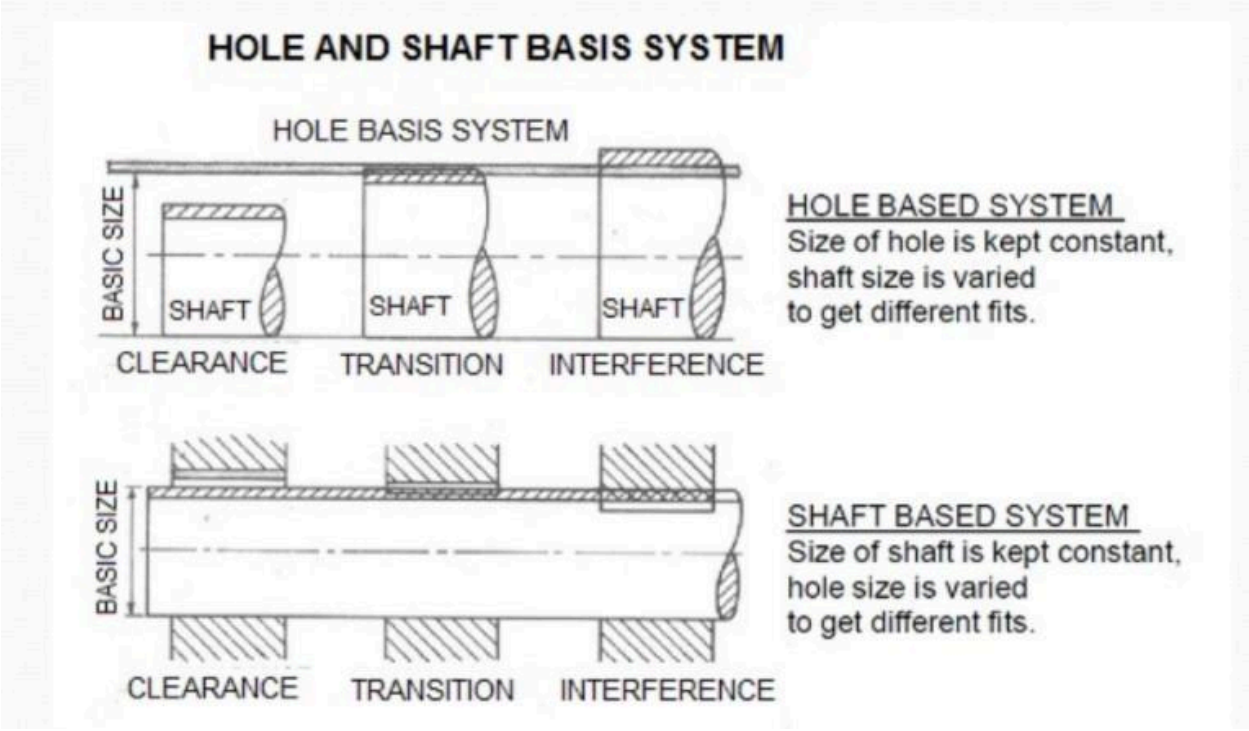
Provides a small gap between shaft and hole for free sliding or rotation with minimal play.