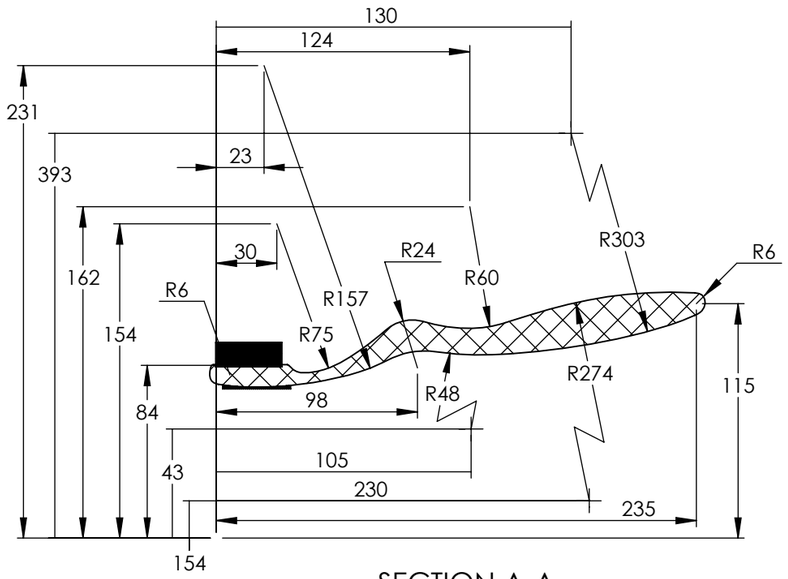


SECTION A-A

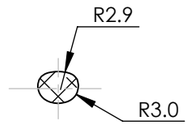


SECTION E-E
SCALE 1 : 1

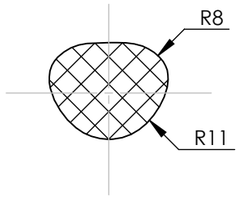


SECTION D-D
SCALE 1 : 1

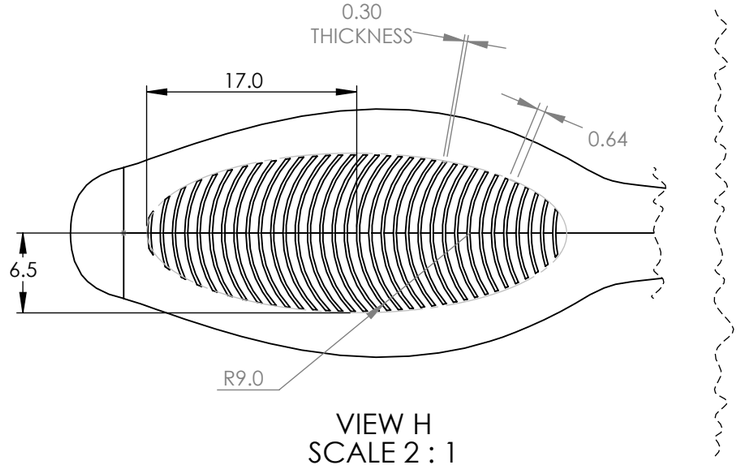


VIEW H
SCALE 2 : 1

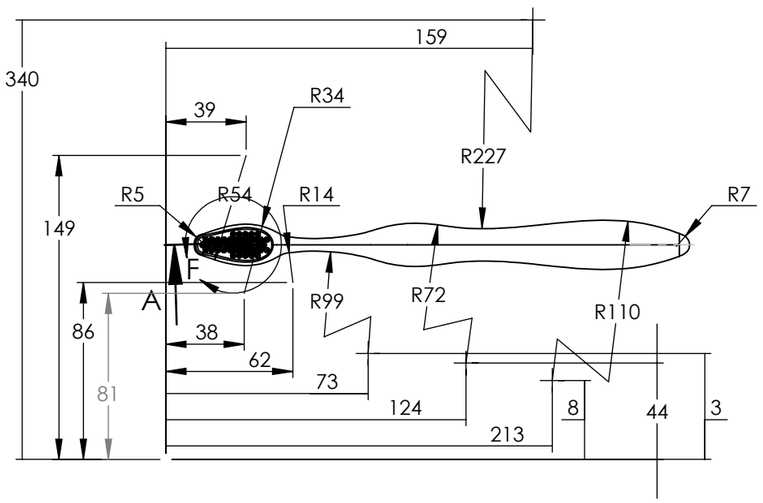


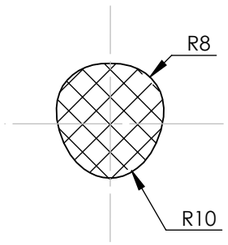


SECTION C-C
SCALE 1 : 1

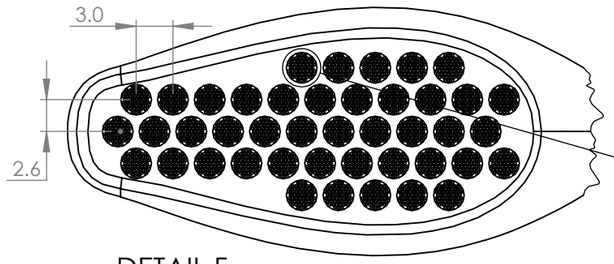


DETAIL F
SCALE 2 : 1

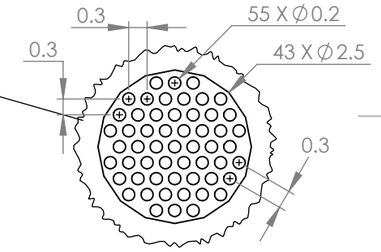


DETAIL G
SCALE 10 : 1

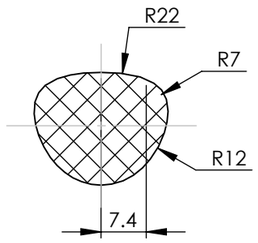


SECTION B-B
SCALE 1 : 1

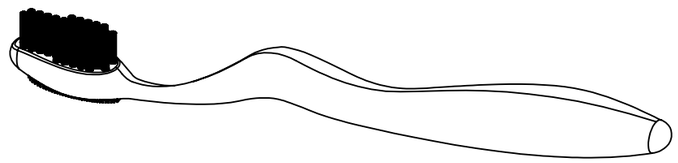

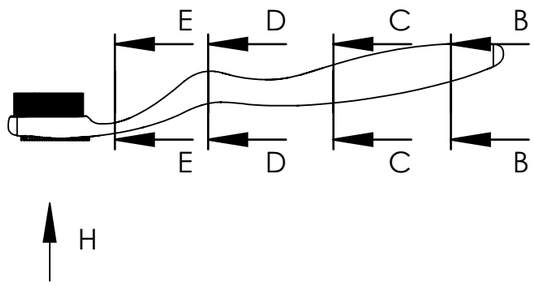


| | | | | | | |
|---|---|---|---|---|---|---|
| UNLESS OTHERWISE SPECIFIED: DIMENSIONS ARE IN MILLIMETERS SURFACE FINISH: TOLERANCES: ONLY REQUIRED WHERE SPECIFIED | FINISH: GLOSS FINISH OVERALL | | DEBURR AND BREAK SHARP EDGES | DRAWING IS TO SCALE FOR EXACT REPRESENTATION OF CURVES | REVISION | |
| | NAME | SIGNATURE | DATE | TITLE: Ordinary Toothbrush | | |
| DRAWN | Saad | | 07/11/23 | | | |
| CHK'D | | | | | | |
| APPV'D | | | | | | |
| MFG | | | | | | |
| Q.A | | | | MATERIAL: POLYPROPYLENE AND NYLON BRISTLES | DWG NO. 1 | A3 |
| | | | | WEIGHT: 18.75 grams | SCALE:1:3 | SHEET 1 OF 1 |

SOLIDWORKS Educational Product. For Instructional Use Only.