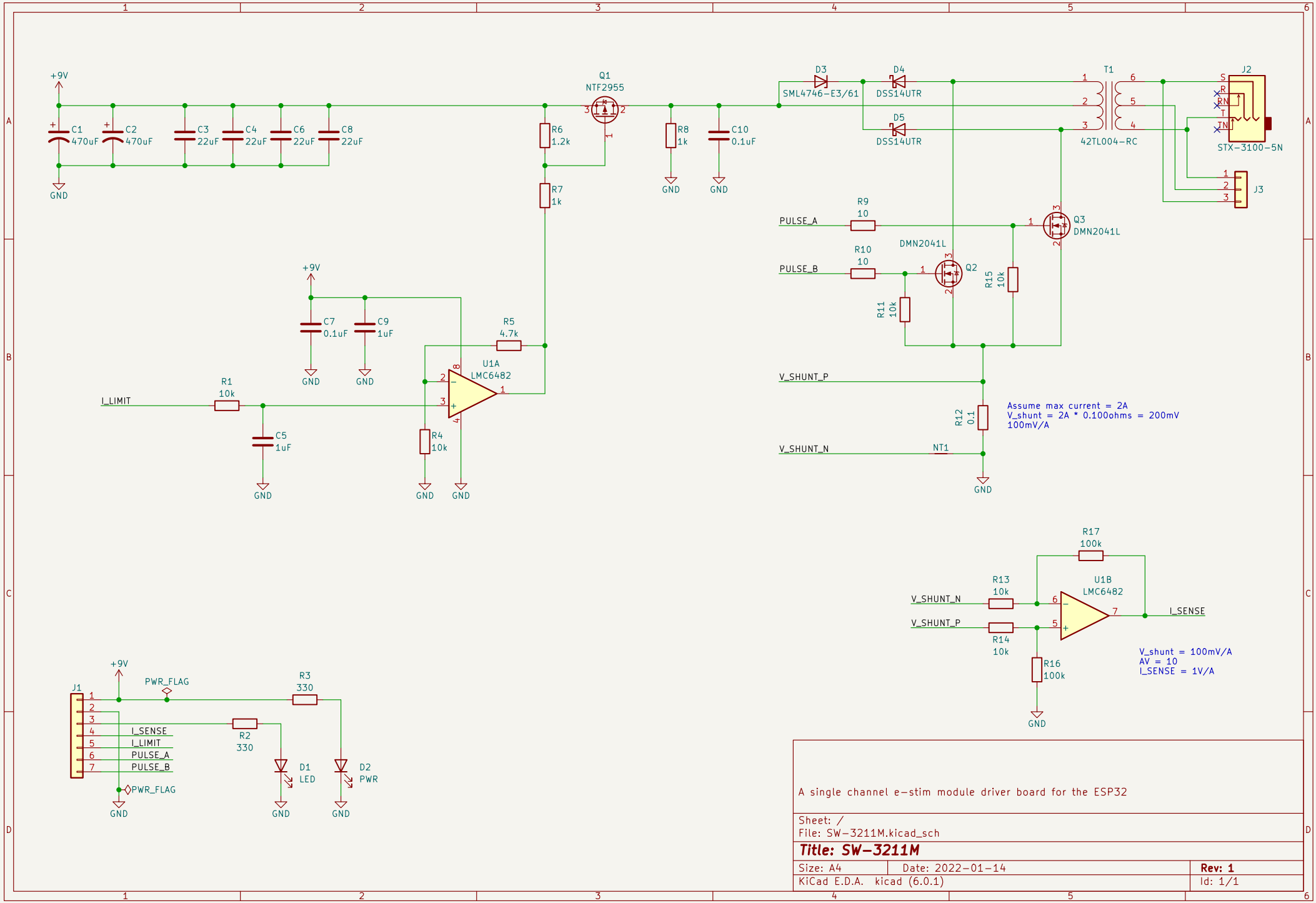

A single channel e-stim module driver board for the ESP32

Sheet: /
File: SW-3211M.kicad_sch

Title: SW-3211M

Size: A4	Date: 2022-01-14	Rev: 1
KiCad E.D.A. kicad (6.0.1)		Id: 1/1