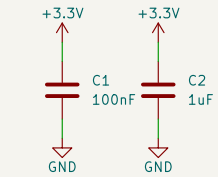

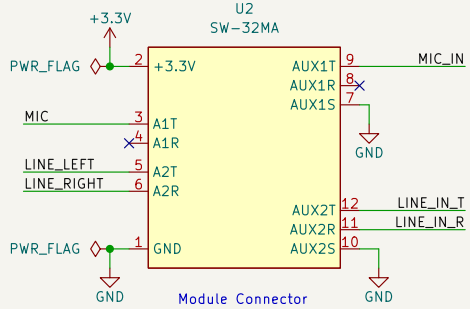

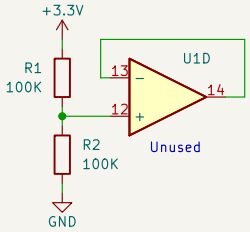

Mic Preamp

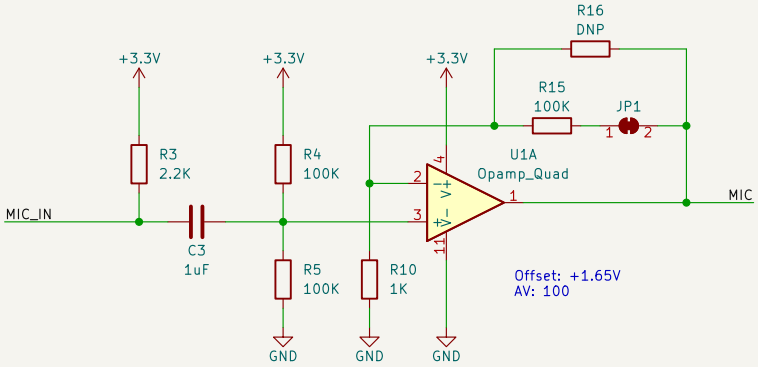

Stereo Line Amp

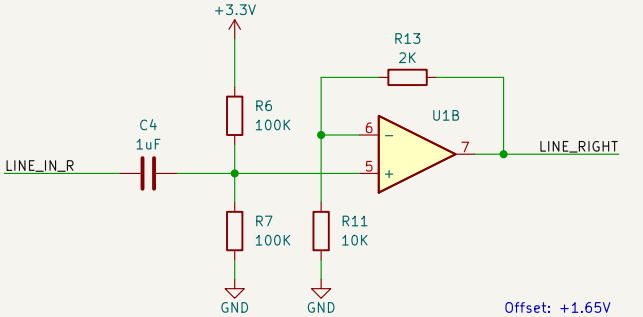

Assume max 2.0 V_{pp}

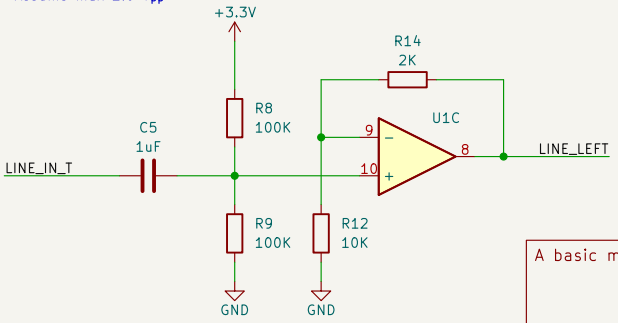

A basic microphone and stereo line-in audio module for the SW-32xx boards

saawsm

Sheet: /
File: SW-32MA1.kicad_sch

Title: SW-32MA1

Size: A4	Date: 2022-05-16	**Rev: 1**
KiCad E.D.A. kicad (6.0.1)		Id: 1/1