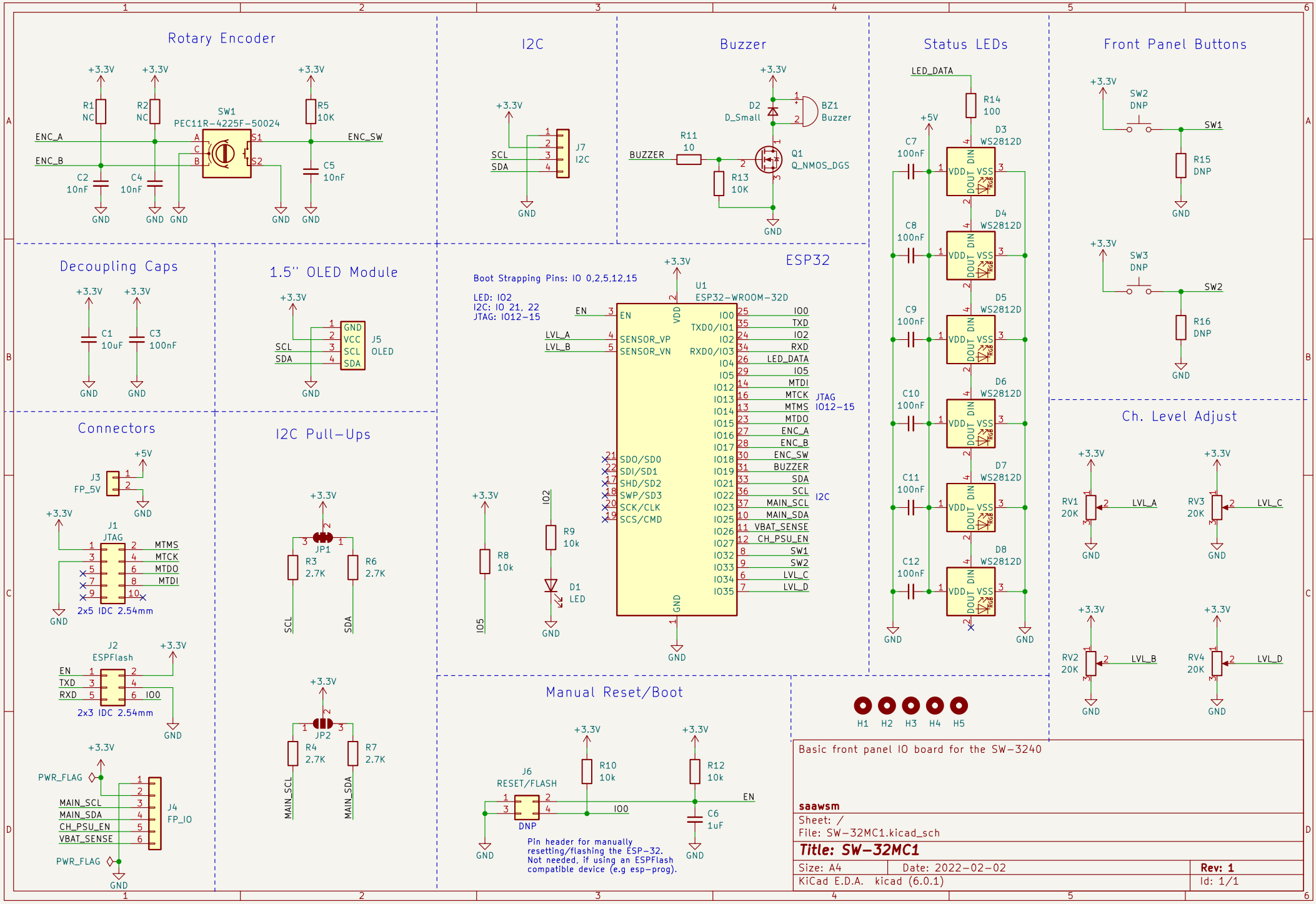
Rotary Encoder
SW1
PEC11R-4225F-50024
ENC_A
ENC_B
ENC_SW
R1 NC
R2 NC
R5 10K
C2 10nF
C4 10nF
C5 10nF
I2C
J7 I2C
SCL
SDA
Buzzer
BZ1 Buzzer
D2 D_Small
R11 10
R13 10K
Q1 Q_NMOS_DGS
BUZZER
Status LEDs
LED_DATA
R14 100
D3 WS2812D
D4 WS2812D
D5 WS2812D
D6 WS2812D
D7 WS2812D
D8 WS2812D
C7 100nF
C8 100nF
C9 100nF
C10 100nF
C11 100nF
C12 100nF
Front Panel Buttons
SW2 DNP
SW3 DNP
R15 DNP
R16 DNP
Decoupling Caps
C1 10uF
C3 100nF
1.5" OLED Module
J5 OLED
Boot Strapping Pins: IO 0,2,5,12,15
LED: IO2
I2C: IO 21, 22
JTAG: IO12-15
ESP32
U1 ESP32-WROOM-32D
EN
LVL_A
LVL_B
SENSOR_VP
SENSOR_VN
SDO/SD0
SDI/SD1
SHD/SD2
SWP/SD3
SCK/CLK
SCS/CMD
JTAG IO12-15
I2C
R8 10k
R9 10k
D1 LED
Connectors
J3 FP_5V
J1 JTAG
MTMS
MTCK
MTDO
MTDI
2x5 IDC 2.54mm
J2 ESPFlash
EN
TXD
RXD
IO0
2x3 IDC 2.54mm
J4 FP_IO
PWR_FLAG
MAIN_SCL
MAIN_SDA
CH_PSU_EN
VBAT_SENSE
I2C Pull-Ups
JP1
JP2
R3 2.7K
R6 2.7K
R4 2.7K
R7 2.7K
Manual Reset/Boot
J6 RESET/FLASH
DNP
R10 10k
R12 10k
C6 1uF
Pin header for manually resetting/flashing the ESP-32. Not needed, if using an ESPFlash compatible device (e.g esp-prog).
Ch. Level Adjust
RV1 20K
RV2 20K
RV3 20K
RV4 20K
H1 H2 H3 H4 H5
Basic front panel IO board for the SW-3240
saawsm
Sheet: /
File: SW-32MC1.kicad_sch
Title: SW-32MC1
Size: A4
Date: 2022-02-02
Rev: 1
KiCad E.D.A. kicad (6.0.1)
Id: 1/1