# RAJIV GANDHI UNIVERSITY OF KNOWLEDGE TECHNOLOGIES BASAR

## DEPARTMENT OF MECHANICAL ENGINEERING

## SUMMER INTERNSHIP PRESENTATION

**Presented by**

Sabavath Praveen kumar
B200236 - E4 - C3
Mechanical Engineering

# SUMMER INTERNSHIP

# CENTRAL INSTITUTE OF TOOL DESIGN
# HYDERABAD

# Contents

Title
Introduction
Problem statement
Methodology
Results
Conclusion

# Title

## FABRICATION OF 3D PROTOTYPE OF SELF LEVELING CUP HOLDER BY SLS TECHNOLOGY

# introduction

**Revolutionizing Mounting Solutions:**

**3D-Printed Cup Holder**

In today's industrial settings, there's a clear need for mounting solutions that are not only lightweight and **durable** but also highly **customizable**. However, traditional **manufacturing** methods often fall short—they're expensive for small batches and can't easily produce the complex, **single-piece** designs needed for modern applications.

This project tackles these **challenges** head-on. We have developed a functional cup holder prototype using advanced **Selective Laser Sintering (SLS)** 3D **printing**. Our solution offers a single-piece, **lightweight** mounting system that can be rapidly prototyped and customized for any application, from cars and trains to carry their needs of their beverages  all without the need for expensive tools or complicated assembly.

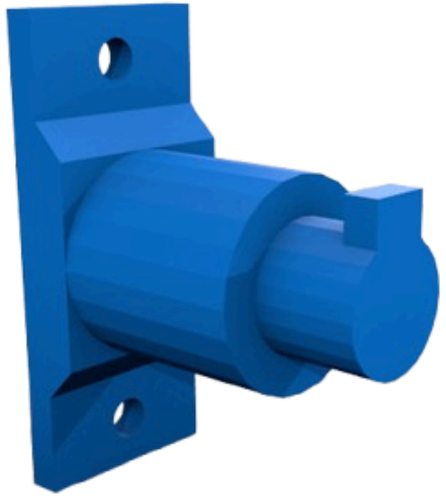

# Problem statement

**Industries** often struggle to balance material performance, dimensional accuracy, and production speed in functional prototyping ?

This **project** addresses these challenges by creating a durable and **precise** Nylon 12 cup holder through optimized slicing and print orientation in **PreForm.**

The cup holder was fabricated using Selective Laser Sintering (SLS) technology to ensure superior mechanical strength and fine surface finish.

This fabrication process validates the potential of SLS-based additive manufacturing for producing functional end-use components.

# Methodology

Conceptual Design

↓

File Preparation

↓

Material Selection

↓

Print Setup

↓

3D Printing Process

↓

Post-processing

↓

Testing

## Design & Engineering Specifications

The cup holder was meticulously designed using **PTC Creo Parametric**, a powerful **CAD software,** to ensure precision and functional integrity. The design focuses on creating a single-piece, robust, and **lightweight** solution optimized for **Selective Laser Sintering (SLS) manufacturing**.

### Key Design Parameters:

Primary Cup Cavity

Wall Thickness

Mounting System:

**Overall Dimensions:** The component has a compact footprint, measuring 120 mm x 85 mm x 40 mm.

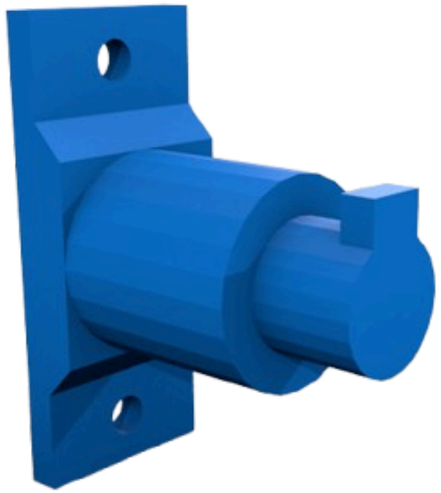

Cradle Ring

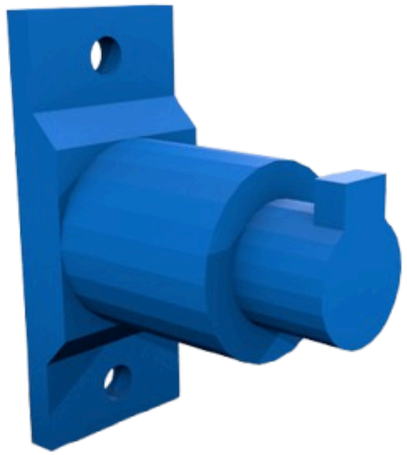

Mounting Bracket

Swing Arm

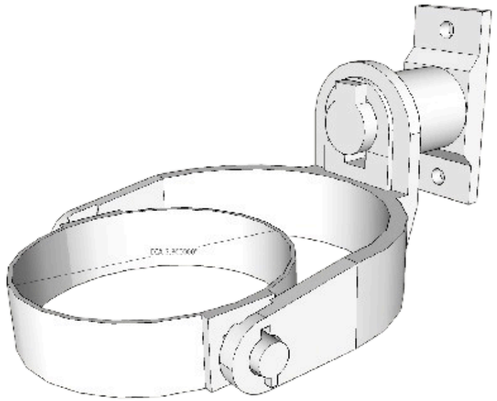

**From CAD to Print:**

STL Conversion & Slicing

Once the design was **finalized** in Creo, each of the three components was converted into an **STL (Stereolithography)** file format.

This critical step translates the solid CAD model into a mesh of **interconnected** triangles that defines the surface geometry of the part.

These STL files were then imported into a slicing software.

## Print Preparation in PreForm: Optimization for Efficiency

For this project, Formlabs' **PreForm software** was utilized for **slicing** and print preparation. This powerful **software** is specifically engineered for **SLS printers** and provides critical tools for **optimizing** the build layout to enhance efficiency.

- The primary goal during this stage was to **minimize** both material consumption and print time. The STL files for the **cup body, bracket, and base** were imported into PreForm, where they were **strategically** arranged on the virtual build platform

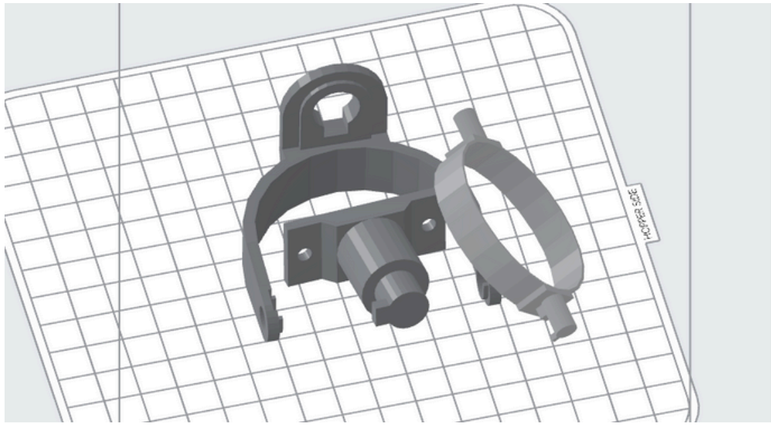

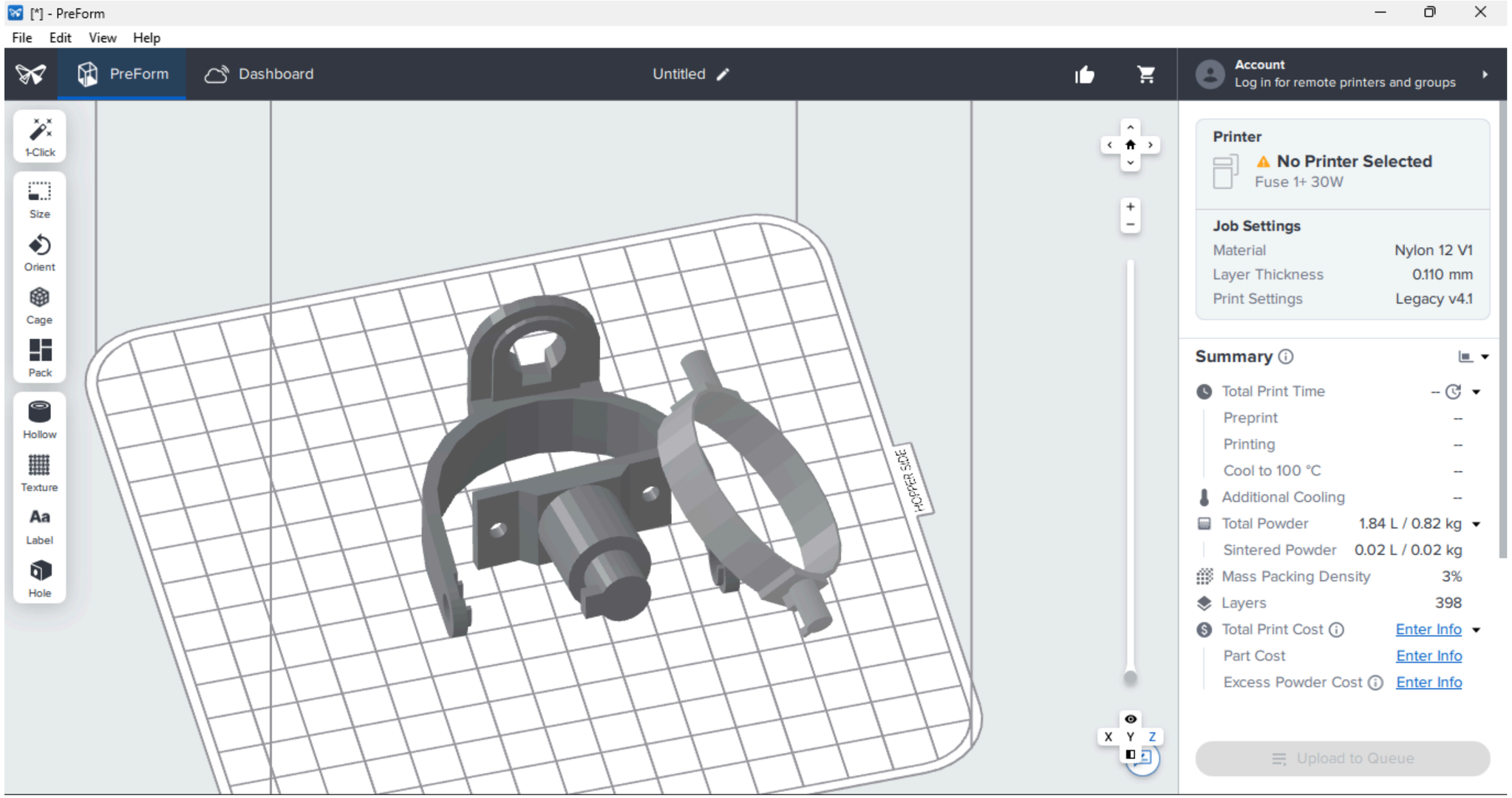


**CAD Models of STL Conversion are imported into the Preform Software**

# I Click Tool

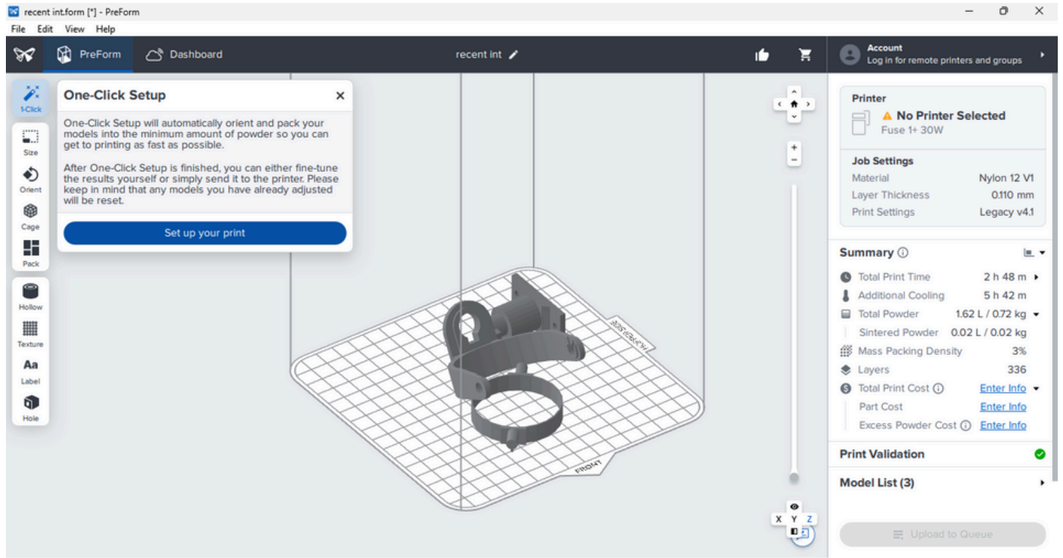


# Size

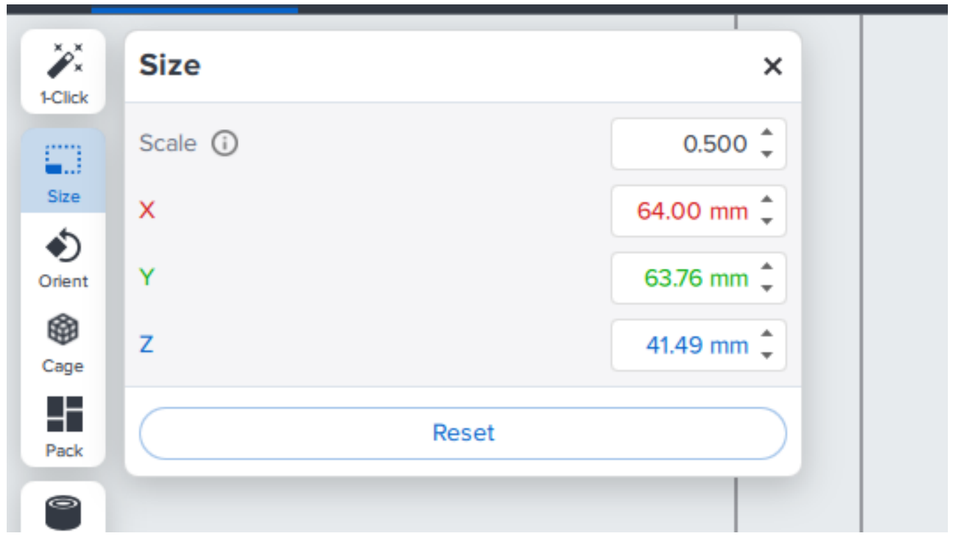


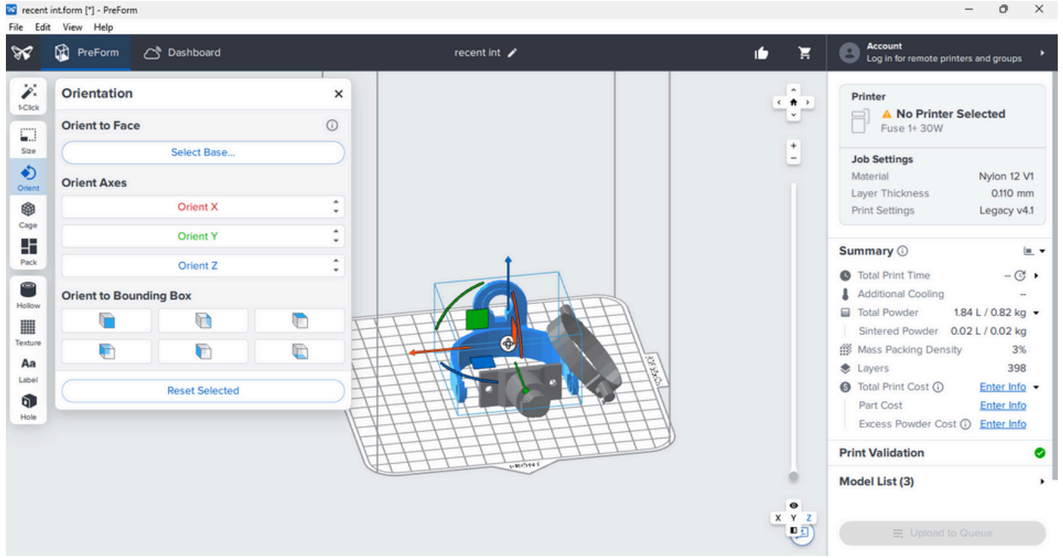


# Orientation tool

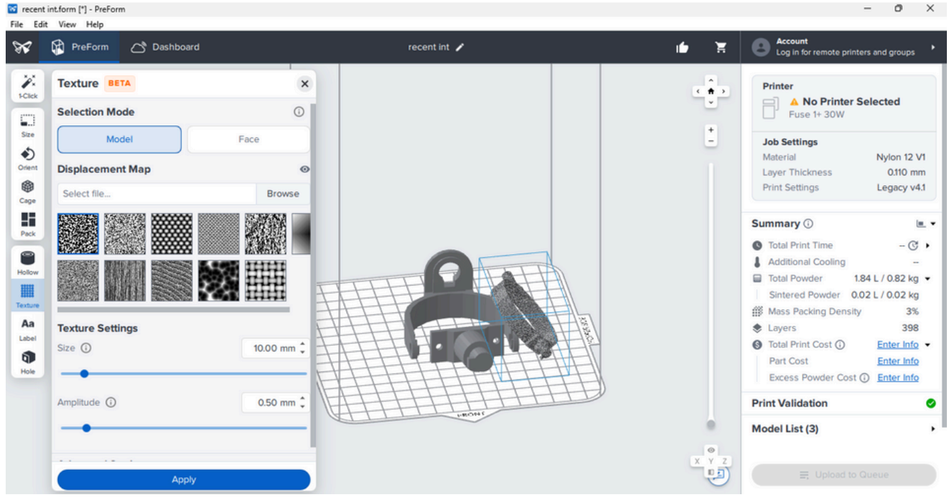


# Texture Tool

# Printer & Material Selection

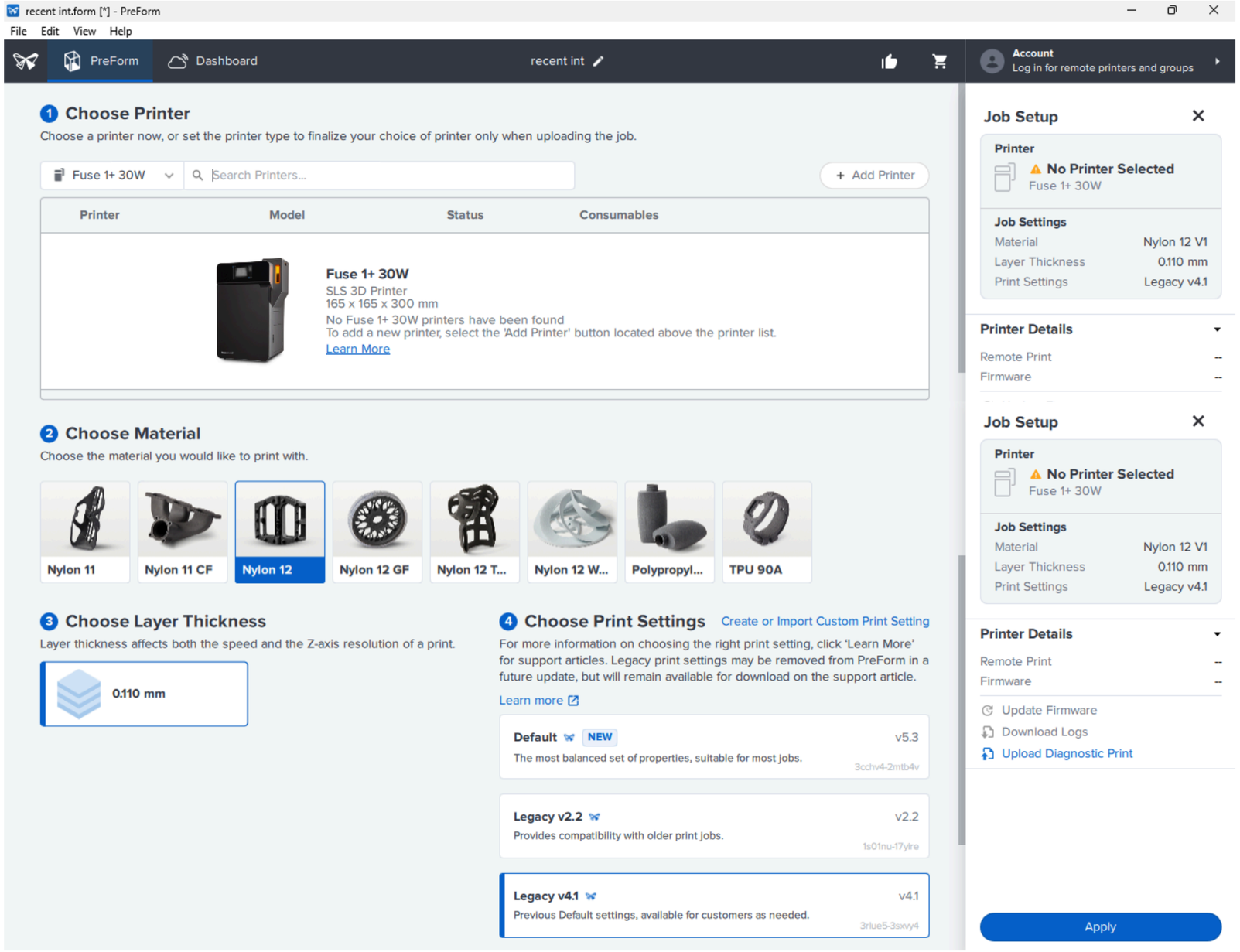

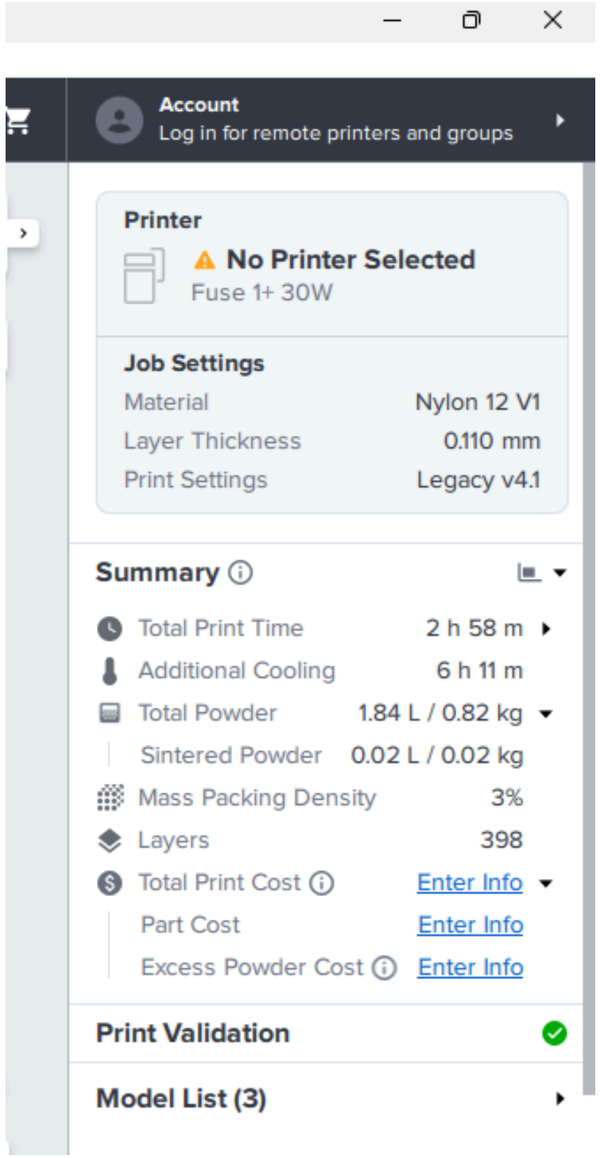


At the initial stage, the print duration was estimated to be **3 hours and 40 minutes**, which later optimized to **2 hours and 58 minutes** after parameter adjustments and **validation**.

**The Job Settings specify:**
**Material:** Nylon 12 V1
**Layer Thickness**: 0.110 mm
**Print Settings:** Legacy v4.1

**Summary of the print job:**
**Total Print Time:** 2 h 58 min
**Additional Cooling Time:** 6 h 11 min
**Total Powder Required:** 1.84 L (0.82 kg)
**Sintered Powder:** 0.02 L (0.02 kg)
**Mass Packing Density:** 3%
**Total Layers:** 398

# Nylon 12 V1 for SLS Technology

Nylon 12 V1 (Polyamide 12) is a **high-performance thermoplastic** polymer widely recognized as the **standard material** for SLS additive manufacturing. It offers an excellent balance between mechanical **strength, flexibility, thermal resistance**, and surface finish, making it ideal for both functional prototypes and end-use components.

## Key Characteristics :

**High Dimensional Accuracy:**

**Superior Mechanical Properties**

**Chemical and Thermal Resistance**

**Lightweight and Flexible**

**Excellent Powder Reusability**

**The Formlabs Fuse 1+ 30W** is an advanced Selective Laser Sintering (SLS) 3D printer engineered for **high-performance**, **industrial-grade** part production within a compact and **accessible** system. Designed for speed, precision, and material efficiency, it bridges the gap between industrial **SLS** systems and desktop-scale usability, making it ideal for **research**, **prototyping**, and low-**volume** manufacturing.

Achieved **precise** dimensional **control** in the fabricated prototype (cup holder) due to consistent laser energy delivery. **Reduced** print time from 3 hr 40 min to 2 hr 58 min after optimization of layer **thickness** and model **orientation**.
Maintained uniform layer fusion with minimal warping or powder wastage. **Demonstrated** high-quality **surface** finish suitable for mechanical testing and functional evaluation.

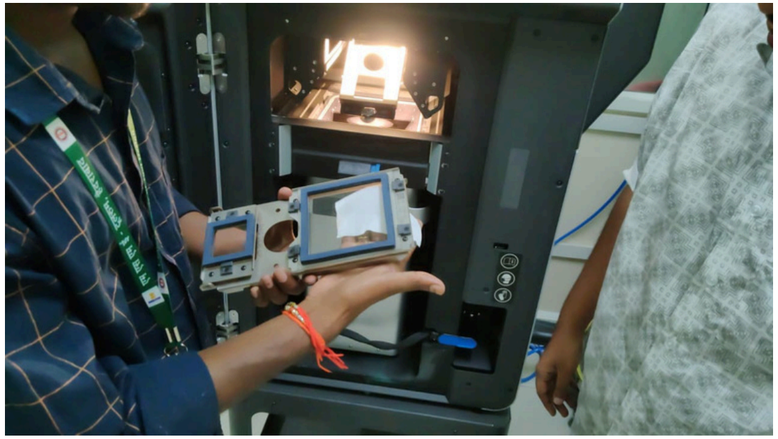

## Build Platform Cleaning Process

## Opting for the Optical casette

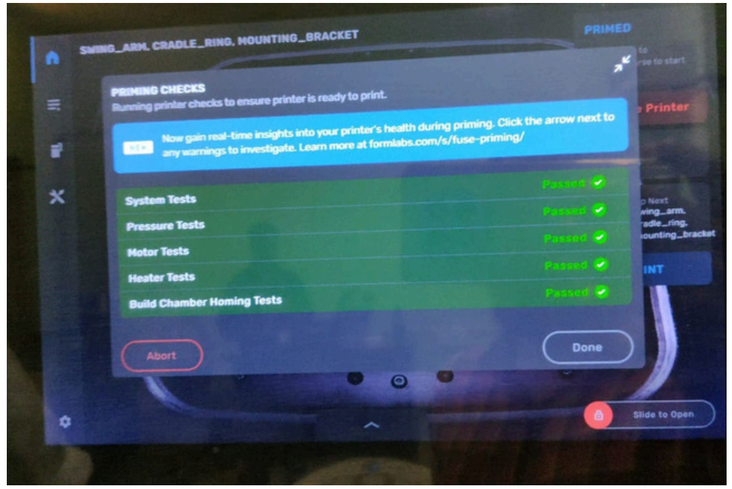


## Pre Test Performance

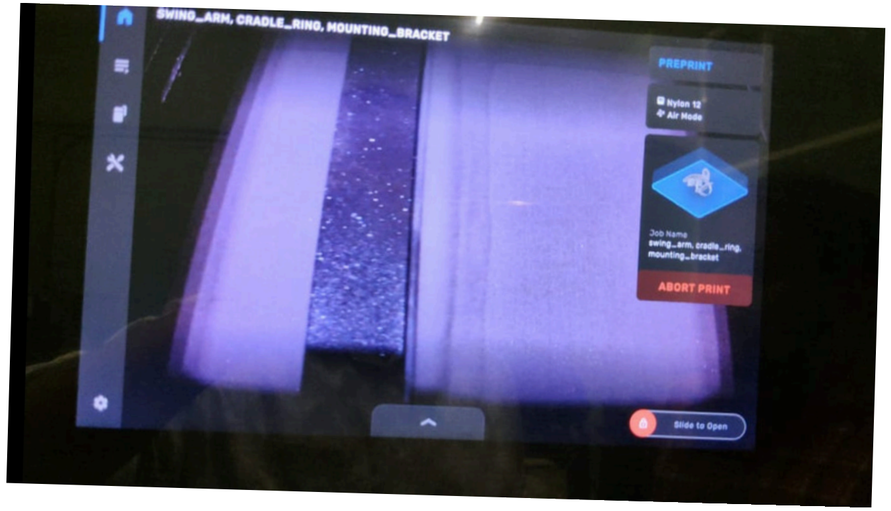


## Pre Heating Completed & started Printed

# Post Processing

# Cleaning

# Brushing

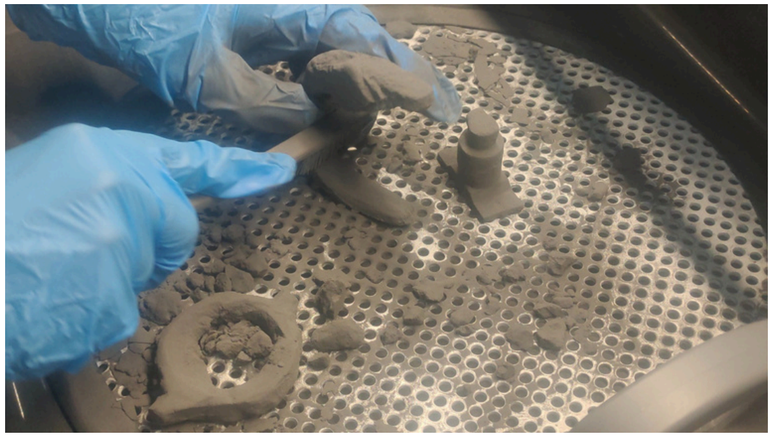

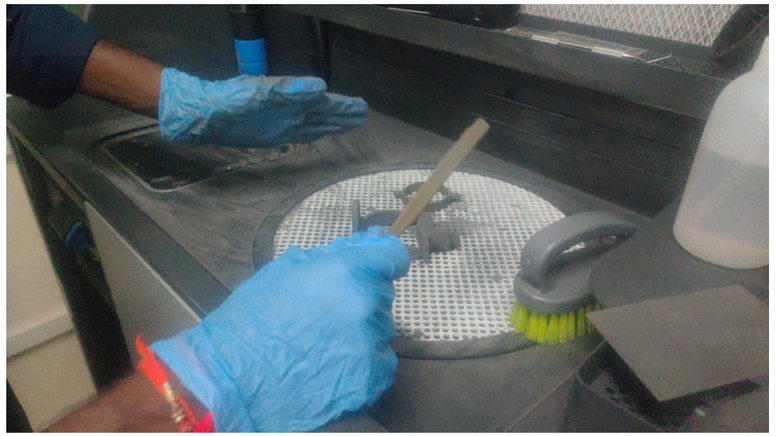

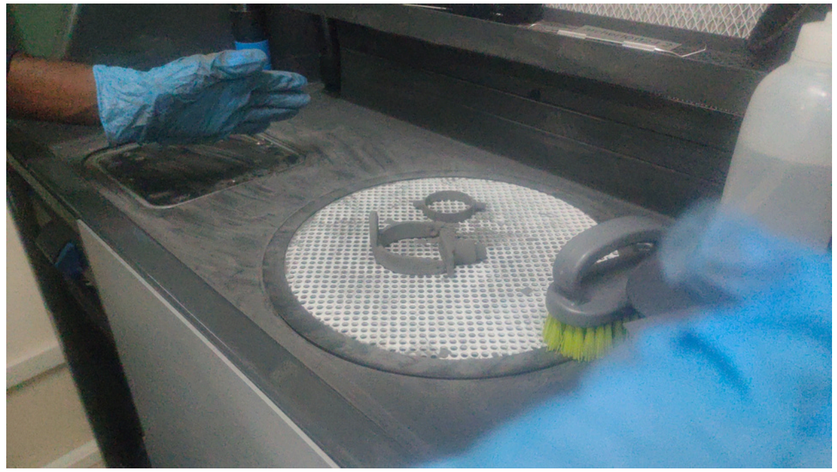

## Vaccumized Pressure

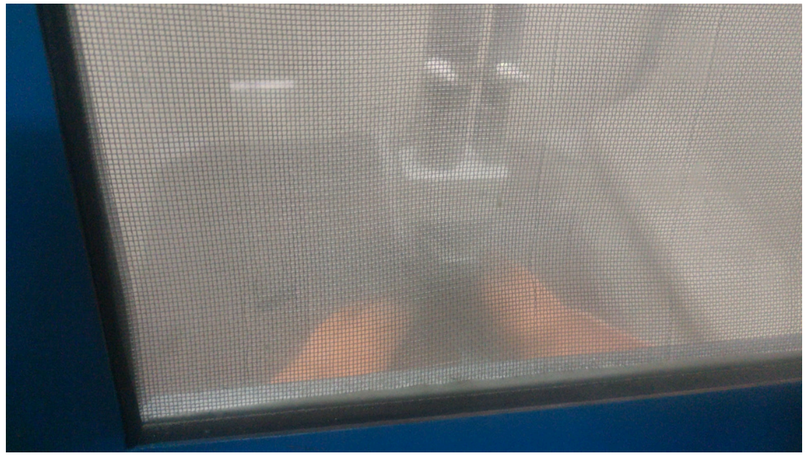

## Sand Blasting

# Assembled Product

# RESULT

The **optimized** print parameters **reduced** the total print time from 3 hr 40 min to 2 hr 58 min, achieving an efficiency gain of 19%.
A total of **398** layers were printed with a layer thickness of 0.110 mm, ensuring high precision and uniform fusion.
The print utilized **1.84 L (0.82 kg)** of Nylon 12 V1 powder, with a mass packing density of 3%.
Sintered powder output: 0.02 L (0.02 kg), indicating minimal **material waste and good process control.**
The fabricated part exhibited a smooth surface finish, low porosity, and dimensional deviation under 0.3 mm.

# Conclusion

The project successfully demonstrated the end-to-end process of designing and fabricating a functional Nylon 12 cup holder prototype using PreForm software.

By optimizing print orientation and support structures, the final product achieved high accuracy, strength, and material efficiency. This approach proves the potential of Nylon 12 in producing robust, cost-effective, and industry-ready prototypes for real-world applications.

# Thank You