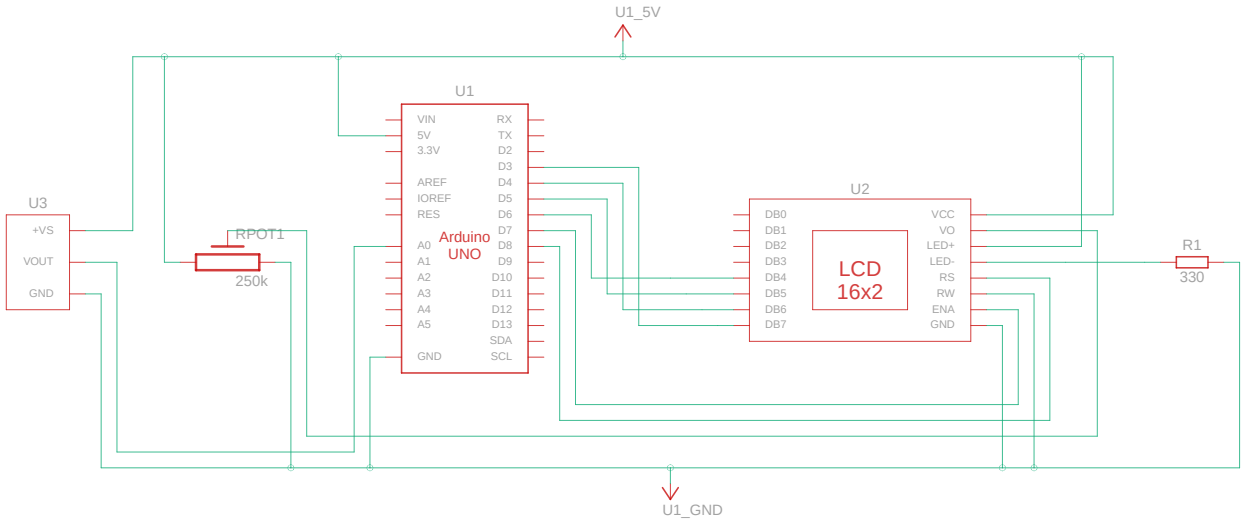

Made with Tinkercad®

Title: Spectacular Crift-Densor	
Date: 10/1/2025, 2:36:54 PM	Sheet: 1/1