**CSE260: Digital Logic Design**
**BRAC University, Spring 2026**
**Submission of the Lab Report 01**

**Submitted by**
**Group 01**
**Section 03A**

Mohammed Sabbir Ahmed - 24141020
Afra Anika Islam - 23201137
Ivona Hossain - 23101528
Sumaiya Shams – 24201246

Date of Submission – 09th March, 2026

# Lab Report 1

## Lab Experiment 1

**Experiment name:** Familiarization with Fundamental Logic Gates

**Required components:**

1. IC 7408 x 1
2. IC 7432 x 1
3. IC 7404 x 1
4. IC 7400 x 1
5. IC 7402 x 1
6. IC 7486 x 1
7. IC 4077 x 1

**Experimental Setup:**

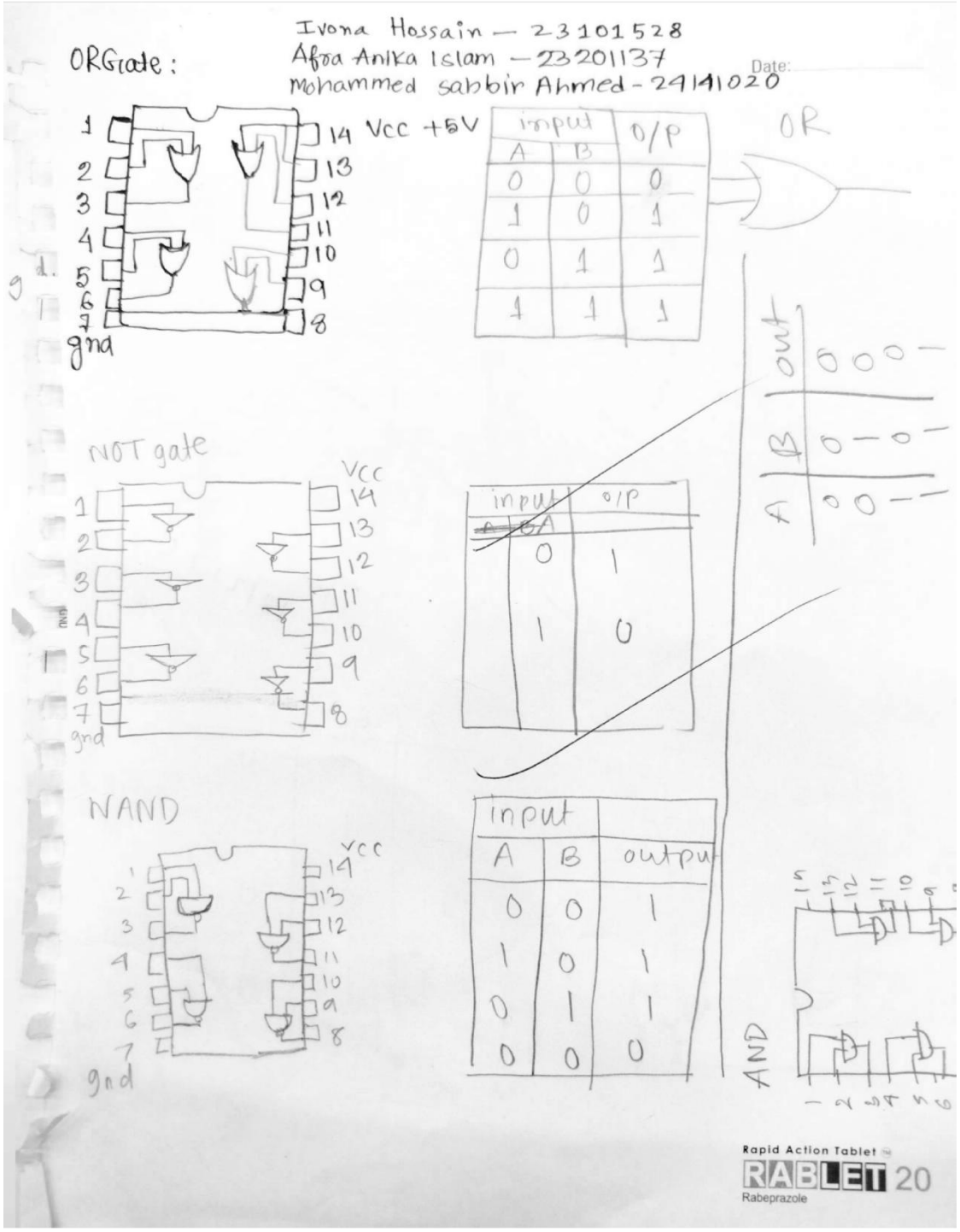

NOR

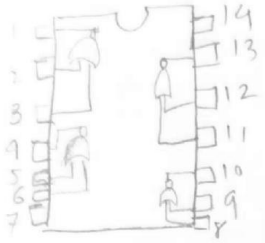


| A | B | output |
|---|---|---|
| 0 | 0 | 1 |
| 0 | 1 | 0 |
| 1 | 0 | 0 |
| 1 | 1 | 0 |

XOR

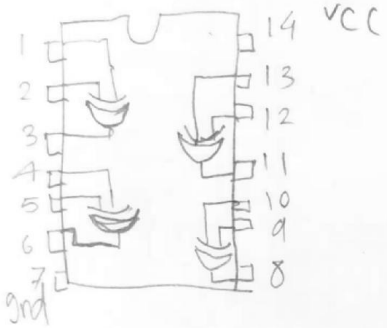


| A | B | out |
|---|---|---|
| 0 | 0 | 0 |
| 0 | 1 | 1 |
| 1 | 0 | 1 |
| 1 | 1 | 0 |

T— 18/2/26

XNOR

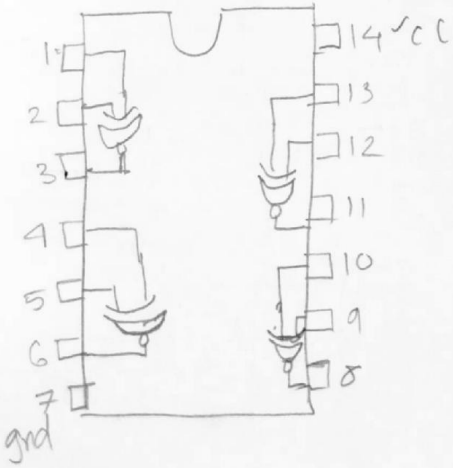


| A | B | out |
|---|---|---|
| 0 | 0 | 1 |
| 0 | 1 | 0 |
| 1 | 0 | 0 |
| 1 | 1 | 1 |

CamScanner

# Lab Experiment 2

**Experiment name:** Universal Gates, Applications of Boolean Algebra

**Required components:**

1. IC 7400 x 1
2. IC 7402 x 2

**Experimental Setup:**

Group 1
- Sumaiya Shams - 24201240
- Mohammed Sabbir Ahmed - 24141020
- Ivma Hossain - 23201528
- Afra Anika Islam - 23201137

Circuit diagram 1

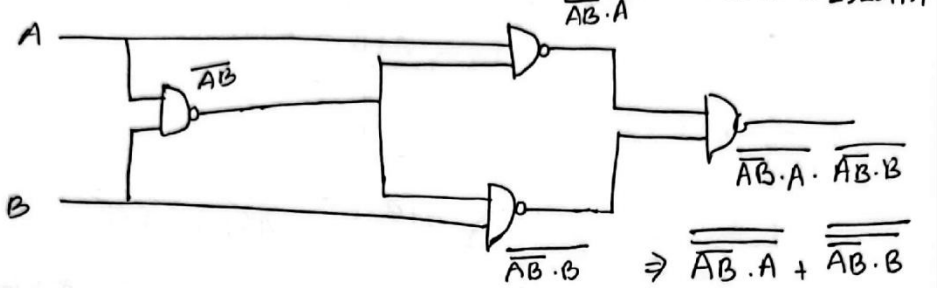


$$\Rightarrow \overline{\overline{\overline{AB}\cdot A}} + \overline{\overline{\overline{AB}\cdot B}}$$

$$\Rightarrow \overline{AB}\cdot A + \overline{AB}\cdot B$$

$$\Rightarrow (\bar{A}+\bar{B})\cdot A + (\bar{A}+\bar{B})\cdot B$$

$$\Rightarrow \bar{A}A + \bar{B}A + \bar{A}B + \bar{B}B$$

$$= \bar{A}B + A\bar{B}$$

$$= A \oplus B$$

Truth table

| A | B | out |
|---|---|---|
| 0 | 0 | 0 |
| 0 | 1 | 1 |
| 1 | 0 | 1 |
| 1 | 1 | 0 |

| A | B | $\overline{AB}$ | $\overline{\overline{AB}\cdot A}$ | $\overline{\overline{AB}\cdot B}$ | $A \oplus B$ |
|---|---|---|---|---|---|
| 0 | 0 | 1 | 0 | 0 | 0 |
| 0 | 1 | 1 | 0 | 1 | 1 |
| 1 | 0 | 1 | 1 | 0 | 1 |
| 1 | 1 | 0 | 0 | 0 | 0 |

T-
25/2/26

CamScanner

## circuit diagram 2

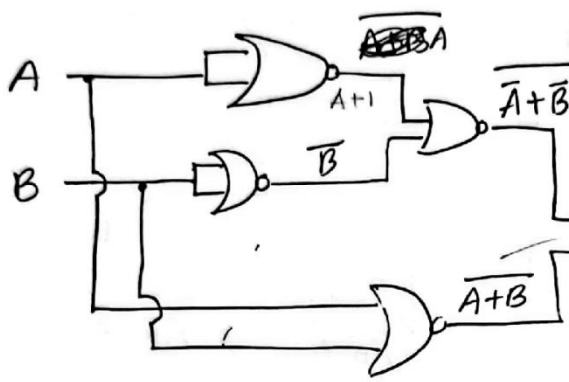


$\overline{\overline{A}+\overline{B}} = \cancel{A+B}$ $\quad \overline{\overline{A}\cdot\overline{B}} \rightarrow A\cdot B$

$AB + \overline{A+B}$

$\cancel{\overline{A+B} + \overline{A+B}}$

$= \cancel{(\overline{A+B}) + (\overline{A+B})}$

$= \cancel{\overline{AB} + \overline{A+B}}$

$= \overline{\underbrace{AB}_{\eta} + \underbrace{\overline{A+B}}_{\zeta}}$

$= \cancel{AB + \overline{A}\cdot\overline{B}}$

$= \cancel{A+B}$

$= \overline{AB} \cdot \overline{\overline{A+B}}$

$= (\overline{A}+\overline{B}) \cdot (A+B)$

$= \cancel{\overline{A}A} + \overline{A}B + \overline{B}A + \cancel{\overline{B}B}$

$= \overline{A}B + A\overline{B}$

$= A \oplus B$

## Truth table

| A | B | A+B | $\overline{A+B}$ | $\overline{A+B+\overline{A+B}}$ |
|---|---|---|---|---|
| 0 | 0 | 0 | 1 | 1 |
| 0 | 1 | 1 | 0 | 1 |
| 1 | 0 | 1 | 0 | 1 |
| 1 | 1 | 1 | 0 | 0 |

CamScanner

# Lab Experiment 3

**Experiment name:** Parity Bit Checker and Generator
**Required components:**

1. IC 7486 x 1

**Experimental Setup:**

4-bit Data Even Parity

| $D_3$ | $D_2$ | $D_1$ | $D_0$ | P |
|---|---|---|---|---|
| 1 | 1 | 0 | 0 | 0 |
| 1 | 0 | 1 | 1 | 1 |

MSB ← left, LSB → right

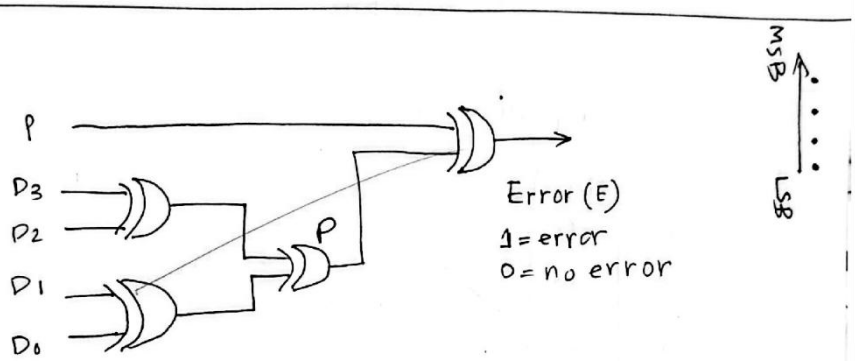


Fig: Parity checker using XOR for 4 bits

T- 4/3/26

Group 1

Afra Anika Islam - 23201137

Ivona Hossain — 23101528

Sumaiya Shams — 24201246

Mohammed Subbir Ahmed - 24141020

CamScanner

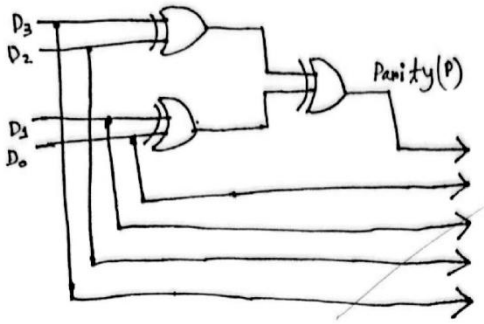


Figure: Even parity generator using XOR Gates for 4-bit Data

Truth table for parity bit generator

| D3 | D2 | D1 | D0 | Parity |
|---|---|---|---|---|
| 1 | 0 | 0 | 1 | 0 |
| 0 | 0 | 0 | 1 | 1 |
| 1 | 1 | 1 | 1 | 0 |
| 0 | 0 | 0 | 0 | 0 |

Truth table for parity bit checker

| P | D3 | D2 | D1 | D0 | Error |
|---|---|---|---|---|---|
| 1 | 1 | 0 | 0 | 1 | ~~0~~ 1 |
| 0 | 0 | 0 | 0 | 1 | 1 |
| 0 | 1 | 1 | 1 | 1 | 0 |
| 1 | 0 | 0 | 0 | 0 | ~~0~~ 1 |

CamScanner

# Discussion

1. Implement the following function using NAND gate only: (A(AB+C'D)+B')'. Do not simplify the function. Draw the circuit diagram only.

Ans to the ques: no: 1

Drawing circuit diagram of $(A(AB+C'D)+B')'$ using NAND gate only:

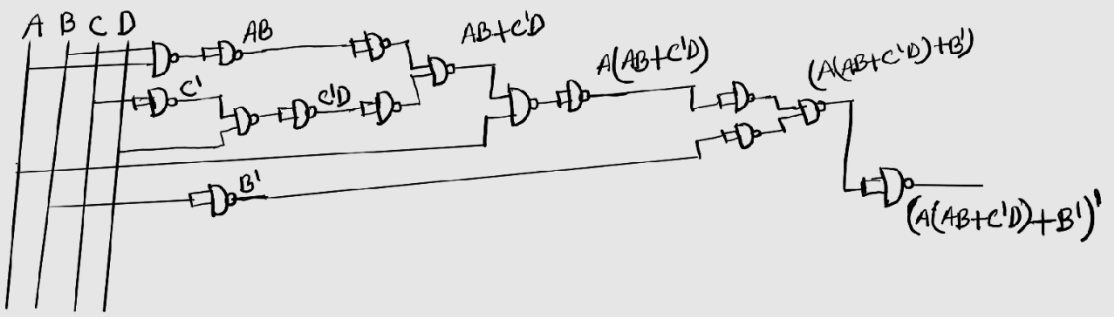

2. Draw the circuit diagrams of 5-bit odd parity checker and generator using NOR gate(s) only

5 bit odd parity checker and generator using NOR Gate(s) only

Generator

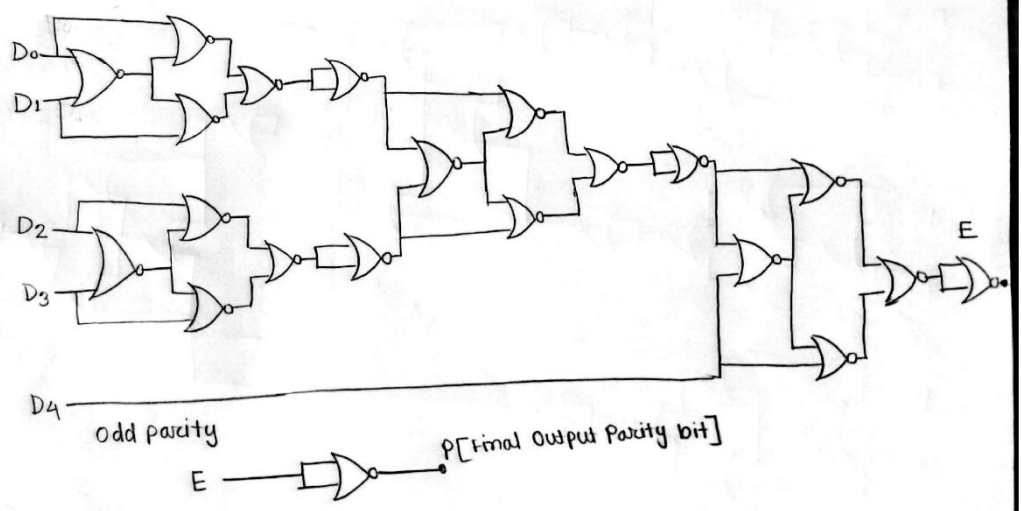


Fig. Odd Parity Generator using NOR Gate for 5 bits

CamScanner

Checker

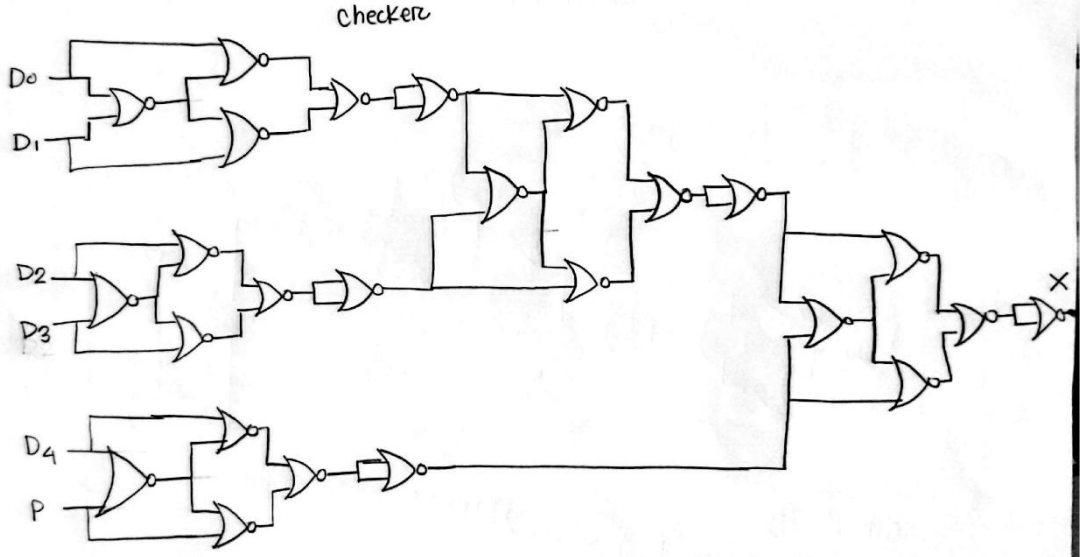


CamScanner