REVISIONS					
ZONE	REV.	DESCRIPTION	DATE	APPROVED BY	ECN
	-	INITIAL RELEASE	10/24/12	BS	1953

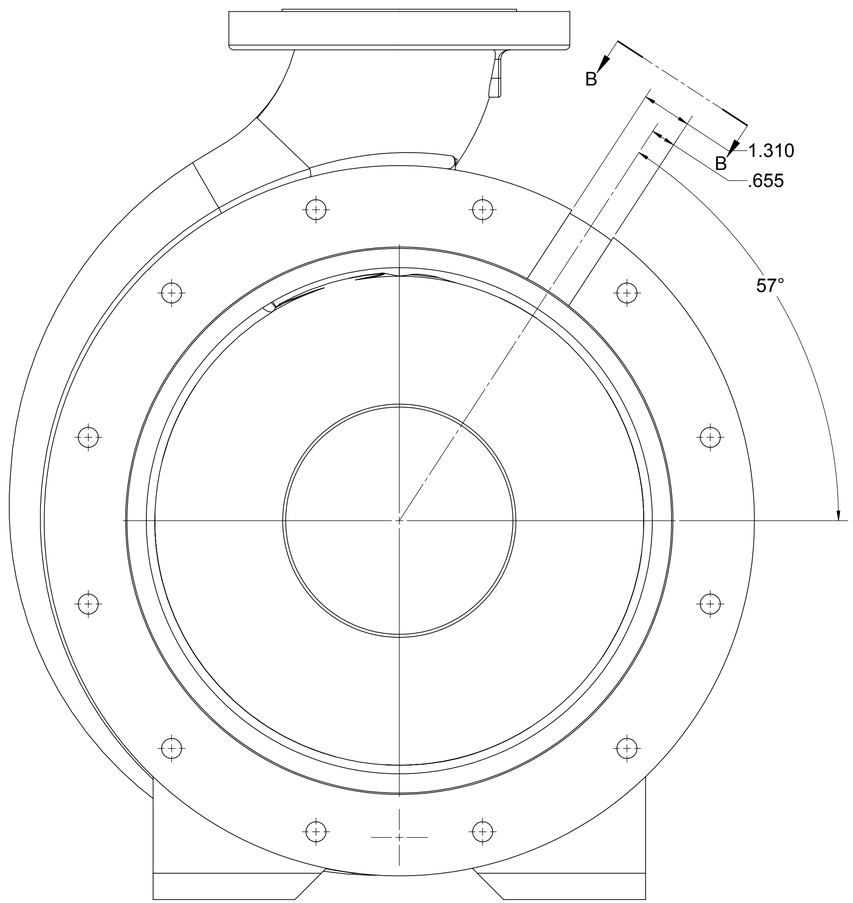

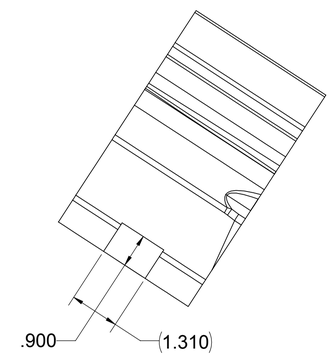

SECTION B-B

MAKE FROM A0204FK

DO NOT SCALE DRAWING

PROPRIETARY AND CONFIDENTIAL

THE INFORMATION CONTAINED IN THIS DRAWING IS THE SOLE PROPERTY OF A.R. WILFLEY AND SONS, INC.. ANY REPRODUCTION IN PART OR AS A WHOLE WITHOUT THE WRITTEN PERMISSION OF A.R. WILFLEY AND SONS INC. IS PROHIBITED.

UNLESS OTHERWISE SPECIFIED:

INTERPRET DRAWING PER ANSI Y14.5M. REMOVE ALL BURRS AND BREAK ALL SHARP EDGES .005 TO .015. FILLET RADII .005 TO .035. ALL DIMENSIONS APPLY AFTER HEAT TREAT, PLATING, AND FINISH PROCESSES. DIMENSIONS ARE IN INCHES

TOLERANCES:

.XXX ± .005 ANGLES ± .5
.XX ± .010
.X ± .030 MACHINED SURFACE FINISH 125

MATERIAL: AS SPEC

MAKE FROM: A0204FK

ITEM NUMBER: 1

	NAME	DATE
DRAWN	SA S.A	10/24/12
CHECKED	BS	10/24/12
ENG APPR.	BS	10/24/12
REDRAWN		

MACHINE DRAWING

A.R. WILFLEY & SONS, INC.
www.wilfley.com

TITLE: CASE, 6X4-13 CUSTOM THERMOWELL

SIZE	SIZE MODEL	DWG. NO.	REV.
D	3A7 3A9	A3000	-

SCALE: NONE1:2 WEIGHT: 182.321 LBS. SHEET 1 OF 1

REV -
A3000
D