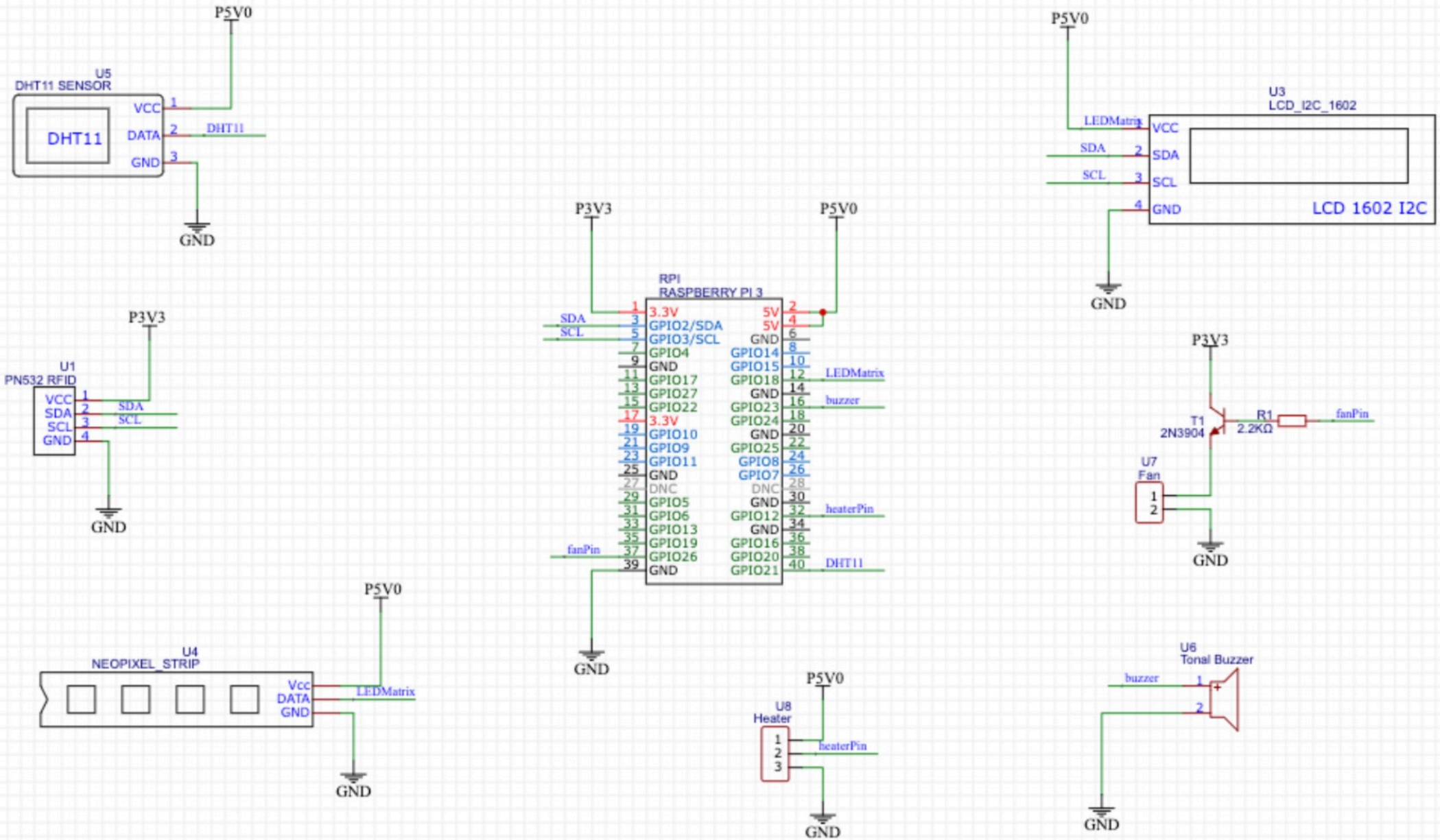

TITLE: Thermostat IOT TEJ4M1		REV: 1.0
EasyEDA	Company: Sadeer Al-Khudri	Sheet: 1/1
	Date: 2024-12-18 Drawn By: Sadeer Al-Khudri	