POWER

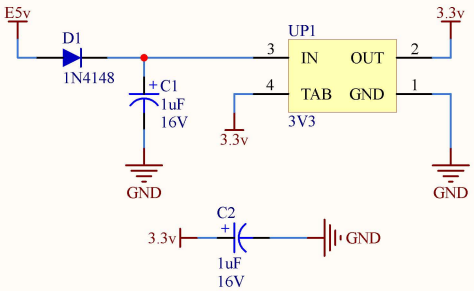

STLINK Connection

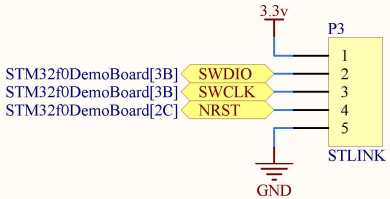

GPIO

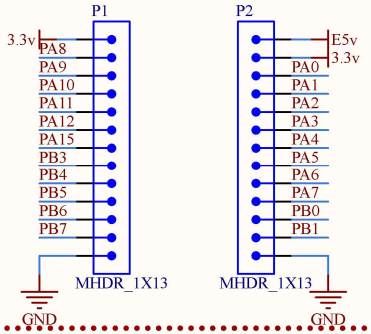

REST

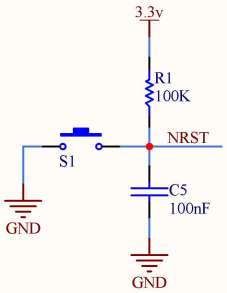

MCU

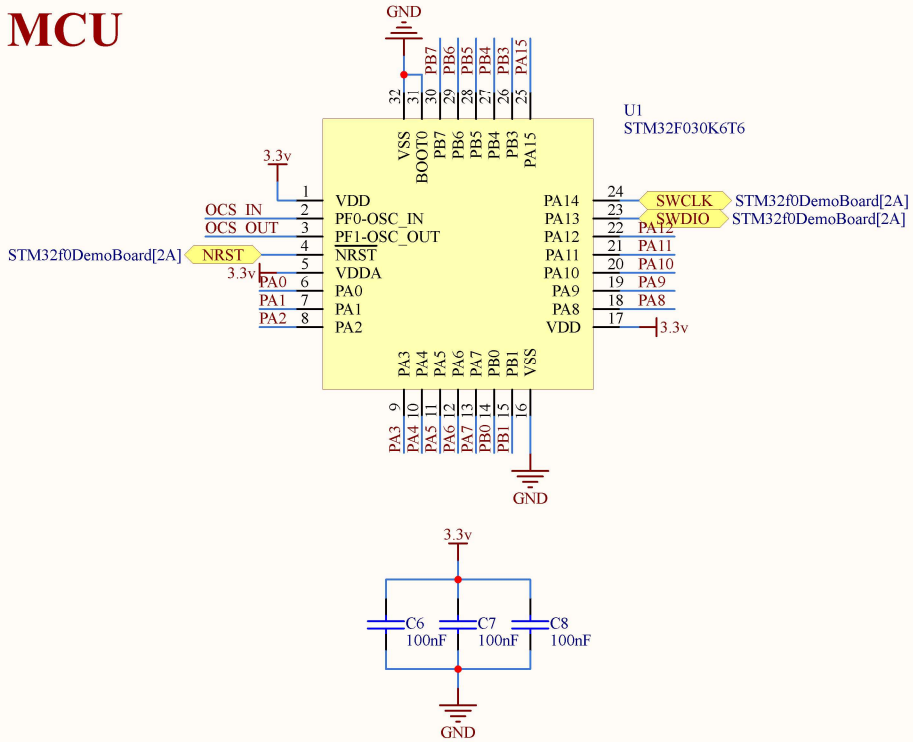

CRYSTAL

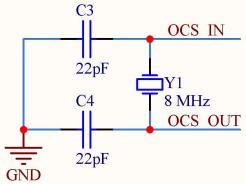

Title : **STM32F0 Demo Board**		Author : Saeed Ghorbani Approved : *	*Email Address*
Size : A4	Prj : STM32f0DemoBoard.PrjPcb	**PUBLIC** Drawn By : Saeed Ghorbani	Sa_ghorbani95@yahoo.com Saghorbani97@gmail.com
Date : 5/30/2024 10:44:48 AM	Sheet 1 of 1	Serial Number : *	Saeed Ghorbani
Git Hash : Not in version control		Revision : 1	
File : C:\Users\SGH\Documents\PCB\Projects\STM32f0DemoBoard\STM32f0DemoBoard.SchDoc			