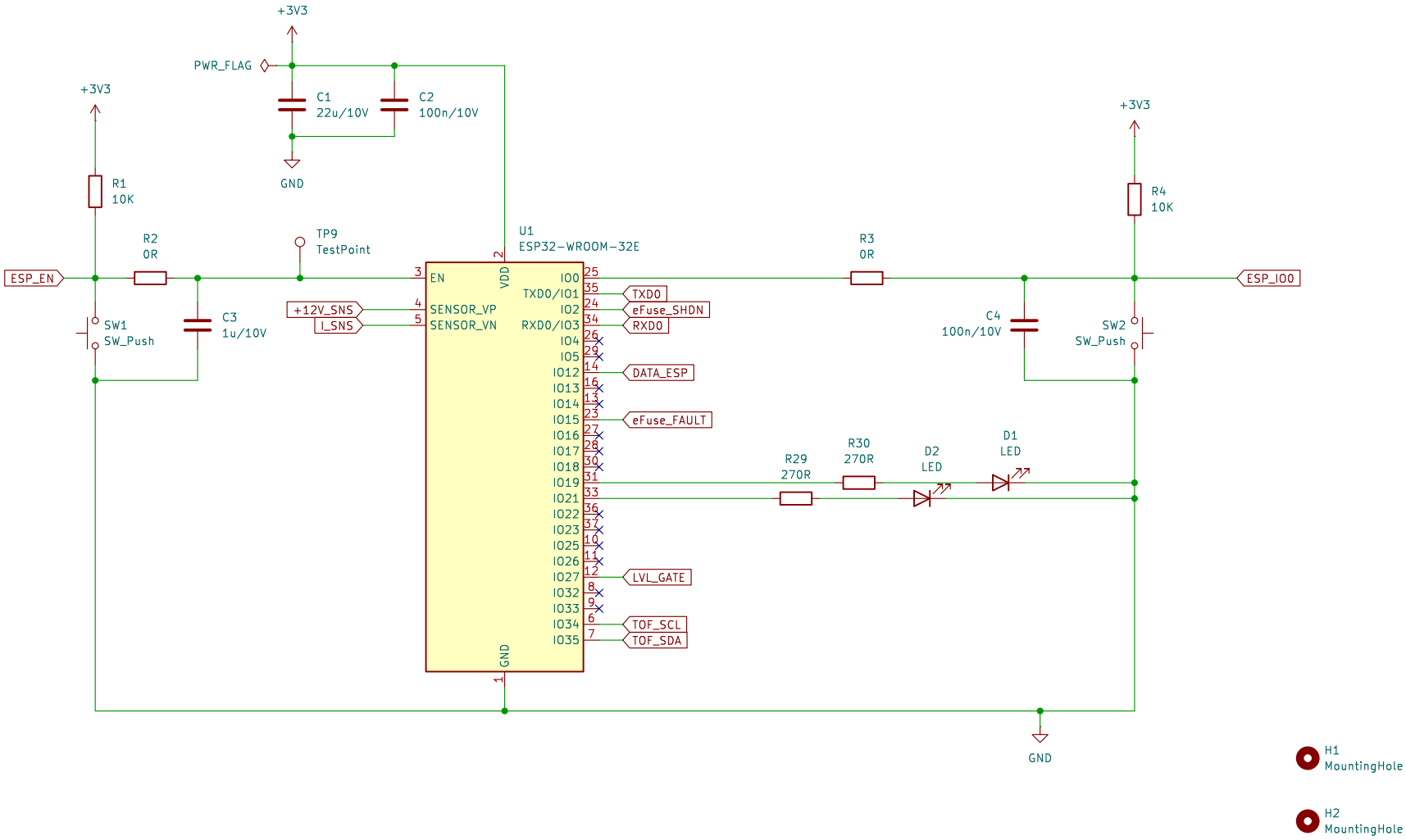

USB

File: usb.kicad_sch

Power

File: power.kicad_sch

Signal

File: signal.kicad_sch

Sheet: /
File: LumiCtrl.kicad_sch

Title: LED stand lampe controller

Size: A4	Date:	**Rev: 2.0**
KiCad E.D.A. 9.0.2		Id: 1/4

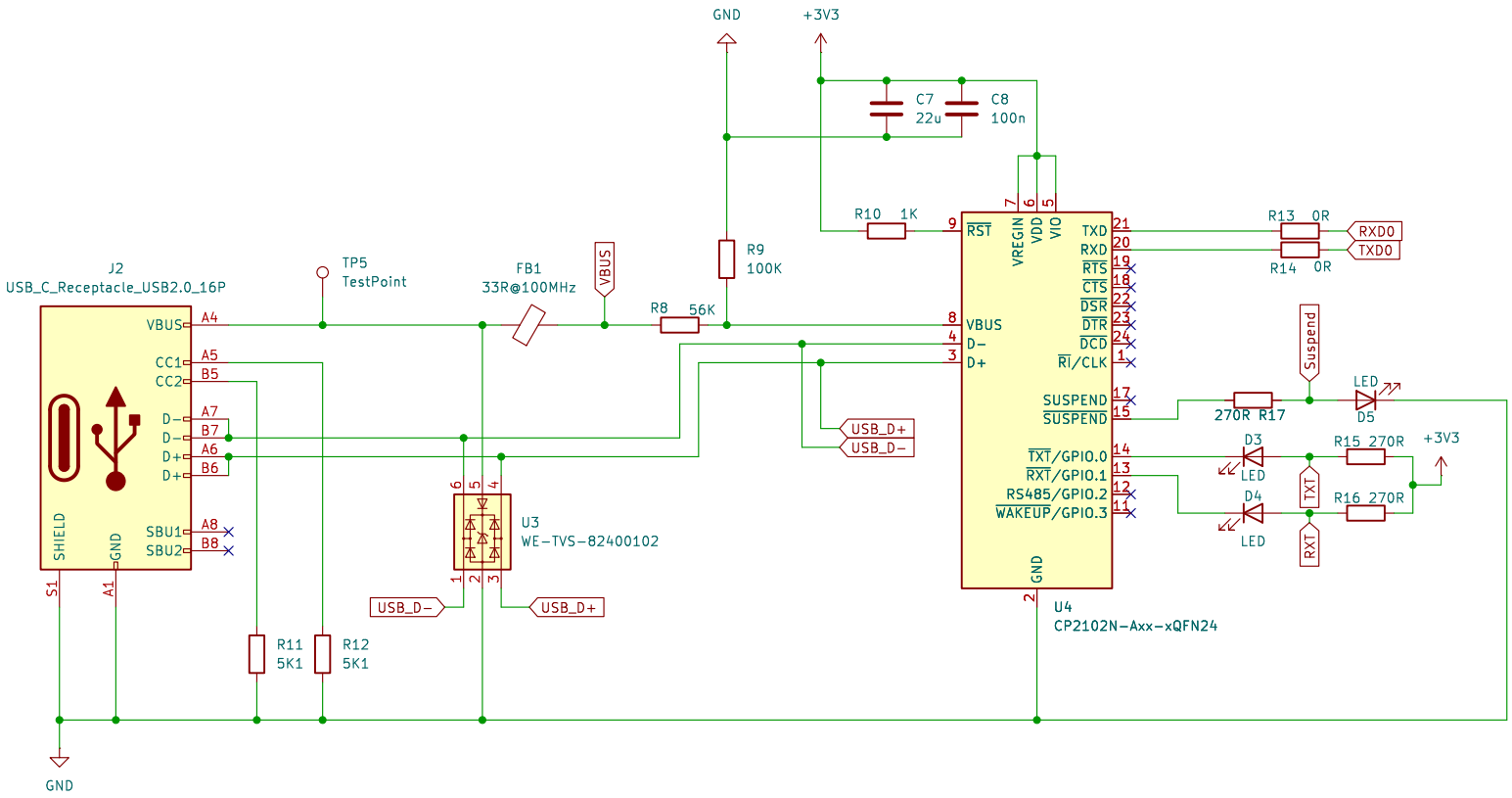

Sheet: /USB/
File: usb.kicad_sch

Title: USB_C connector

Size: A4	Date:	Rev:
KiCad E.D.A. 9.0.2		Id: 2/4

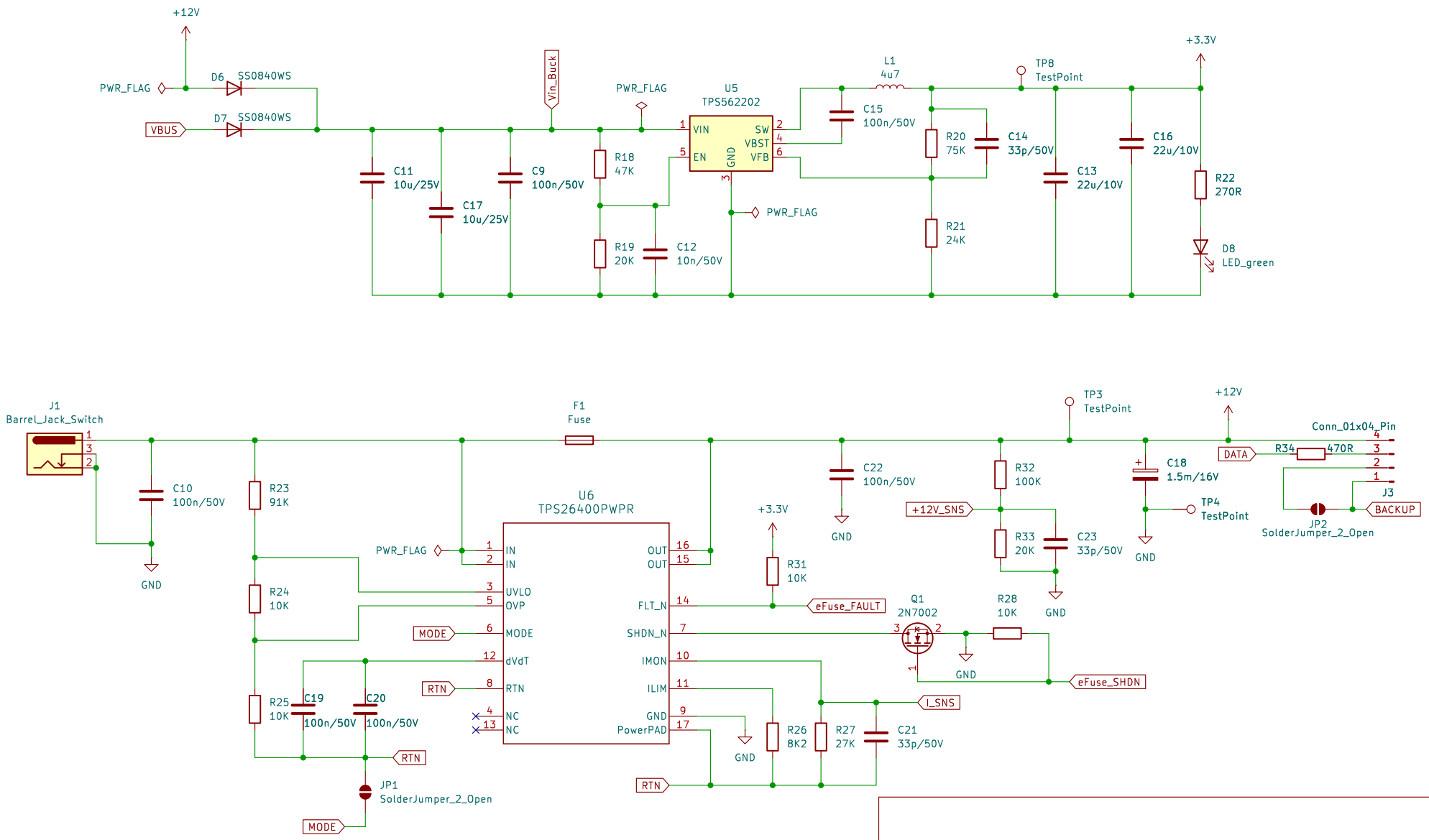

Sheet: /Power/
File: power.kicad_sch

Title: Power and Regler

Size: A4	Date:	Rev:
KiCad E.D.A. 9.0.2		Id: 3/4

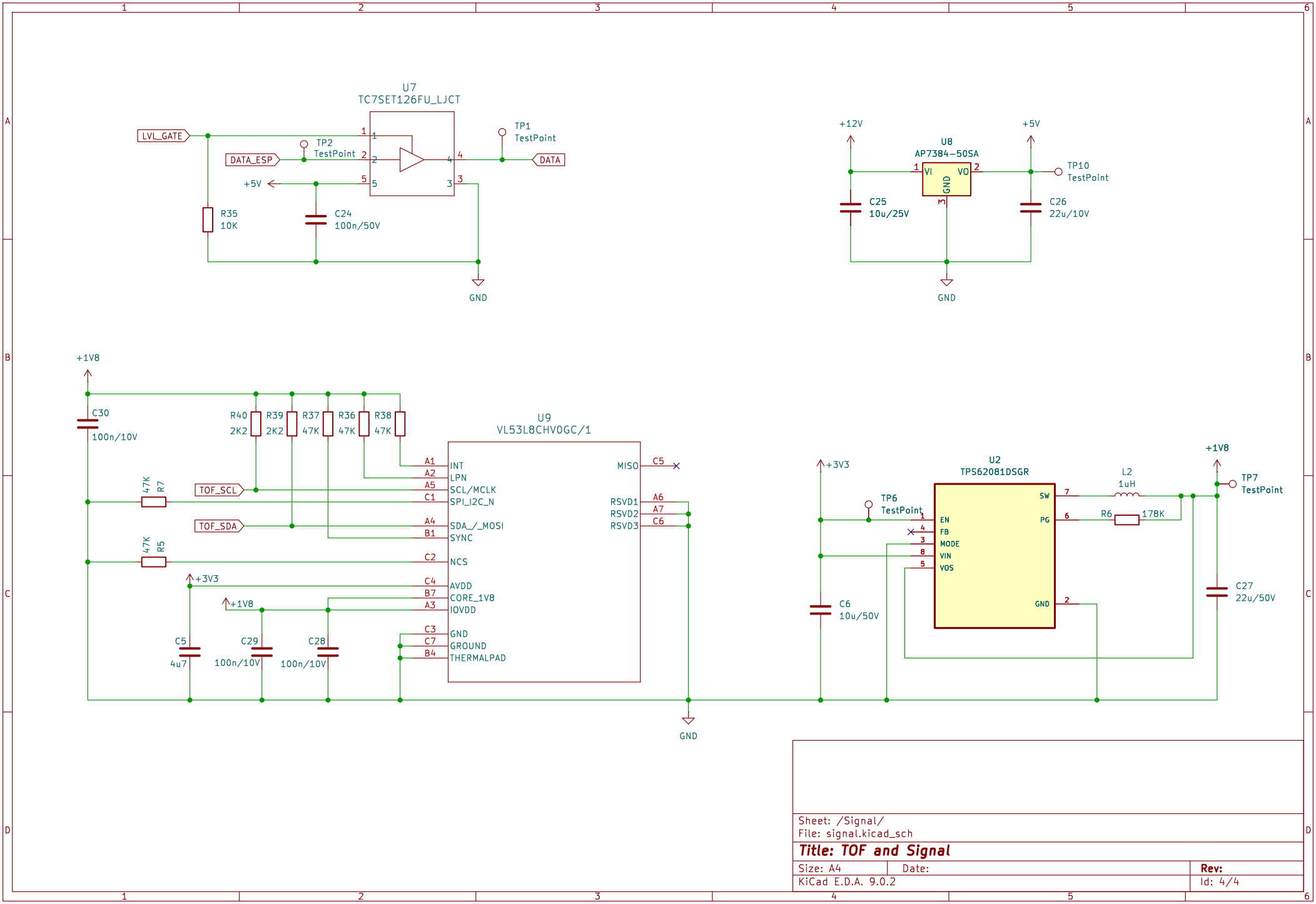

Sheet: /Signal/
File: signal.kicad_sch

Title: TOF and Signal

Size: A4	Date:	Rev:
KiCad E.D.A. 9.0.2		Id: 4/4