REVISIONS				
ZONE	REV.	DESCRIPTION	DATE	APPROV.

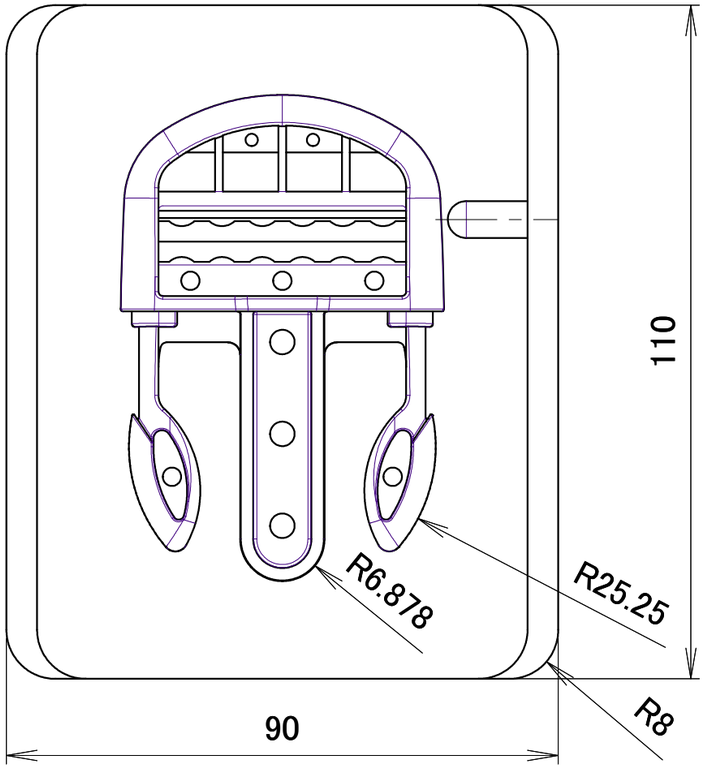

Simple1

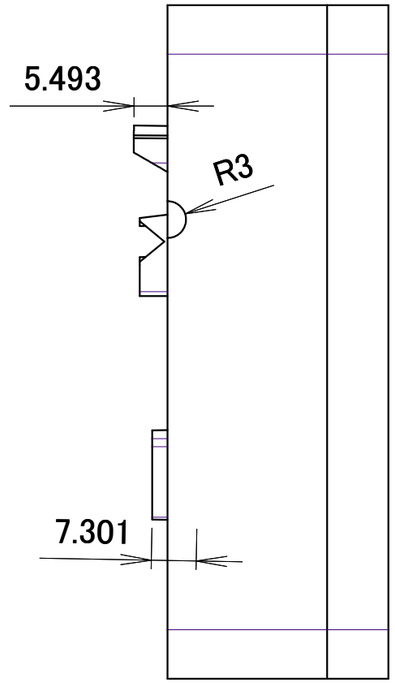

Simple3

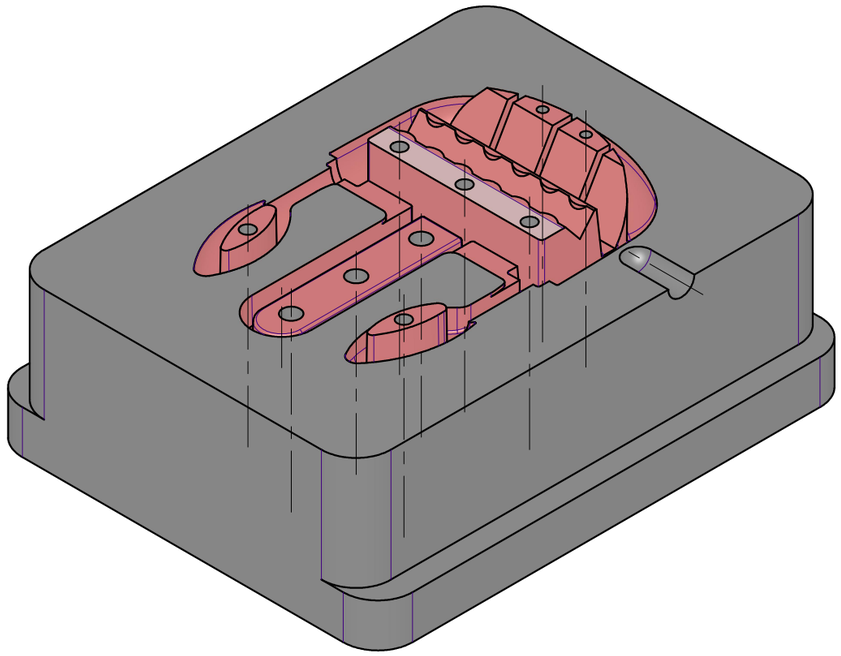

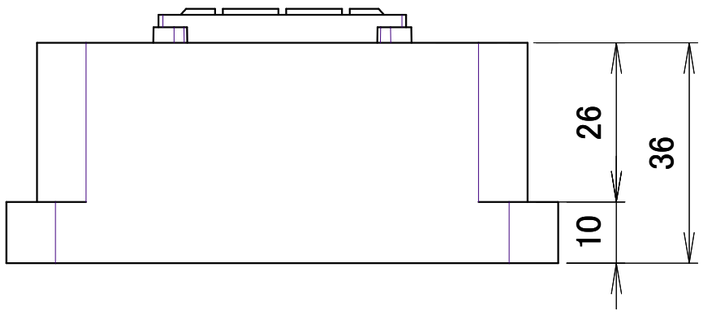

Simple2

	NAME	DATE	SIG.	Simple4		
DRAWN						
DESIGN				DWG. NAME: 印刷とプロット		
CHECKED						
APPROVED				SIZE A3	REV.	DWG. No.
SURF. TEXTURE		OVERALL TOL.		SCALE	SHEET 1 OF 1 SHEETS	