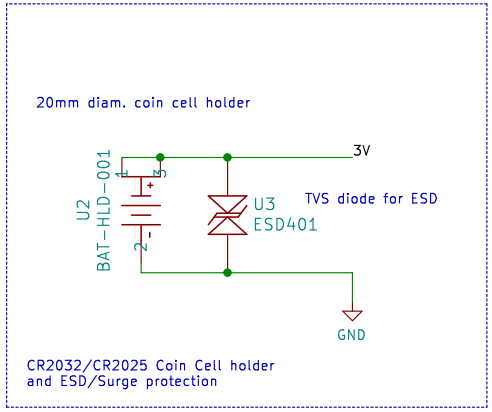

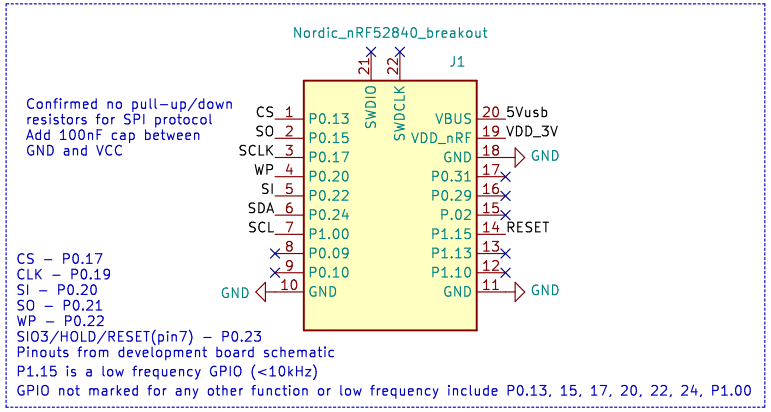

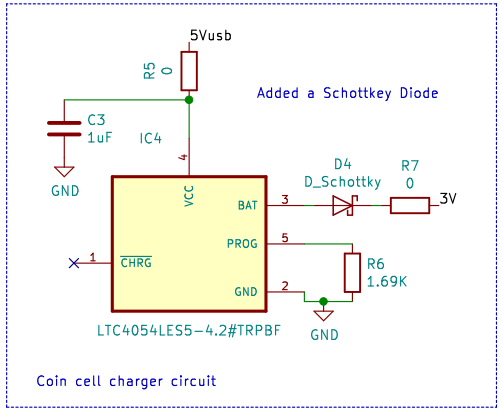

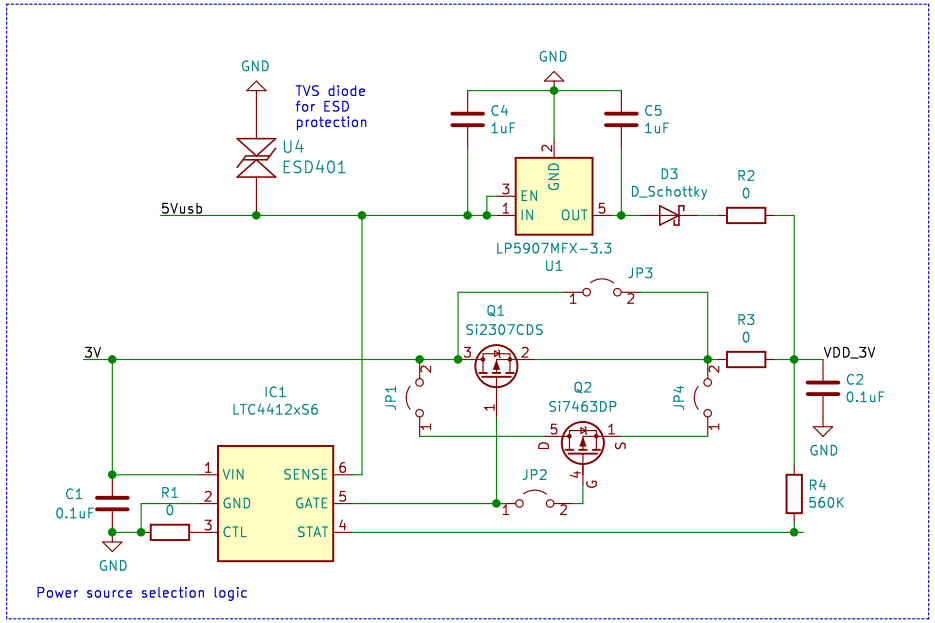

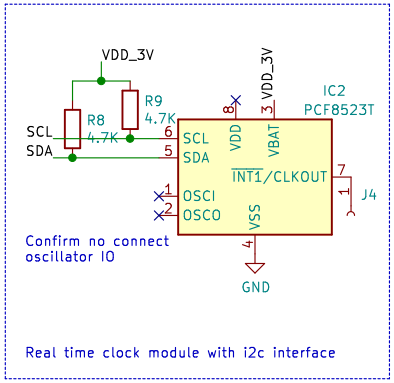

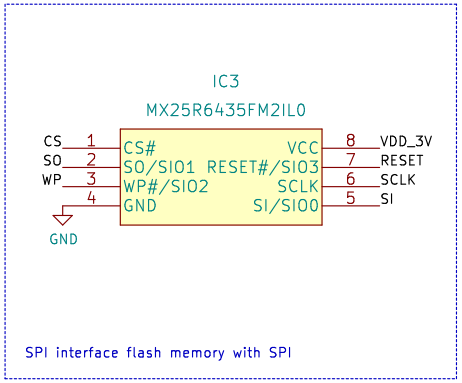

FID1
Fiducial

FID2
Fiducial

H1
MountingHole

Sheet: /		
File: CR2025_Nordic.sch		
Title:		
Size: A4	Date:	**Rev:**
KiCad E.D.A. kicad (5.1.5)-3		Id: 1/1