IEEE Access
Multidisciplinary ⋮ Rapid Review ⋮ Open Access Journal

Received 16 August 2024, accepted 6 October 2024, date of publication 11 October 2024, date of current version 21 October 2024.

Digital Object Identifier 10.1109/ACCESS.2024.3478731

RESEARCH ARTICLE

Hybrid Transformer Architectures With Diverse Audio Features for Deepfake Speech Classification

KHALID ZAMAN[1], ISLAM J. A. M. SAMIUL[1], MELIKE SAH[2], CEM DIREKOGLU[3], SHOGO OKADA[1], (Member, IEEE), AND MASASHI UNOKI[1], (Member, IEEE)

[1]Graduate School of Advanced Science and Technology, Japan Advanced Institute of Science and Technology, Nomi, Ishikawa 923-1292, Japan
[2]Computer Engineering Department, Cyprus International University, North Cyprus, 99258 Nicosia, Türkiye
[3]Electrical and Electronics Engineering Department, Middle East Technical University, Northern Cyprus Campus, 99738 Kalkanli, Güzelyurt, Türkiye

Corresponding authors: Khalid Zaman (zaman.khalid@jaist.ac.jp) and Islam J. A. M. Samiul (s2310403@jaist.ac.jp)

This work was supported in part by the Grant-in-Aid for Transformative Research Areas (A) under Grant 23H04344, and in part by the Grant-in-Aid for Challenging Research (Exploratory) under Grant 23K18491.

ABSTRACT The rise of synthetic speech technologies has triggered growing concerns about the increasing difficulty in distinguishing between real and fake voices. In this context, we propose novel hybrid transformer-based models together with different audio feature analysis techniques and achieved the state-of-the-art results. To the best of our knowledge, none of the existing methods have considered combining various hybrid transformer models together with different audio features for fake speech classification, which forms the main novelty of our work. In our work, transformer models are compared with hybrid transformer architectures including Convolutional Neural Network (CNN)-Transformer (i.e., ResNet34- Transformer and VGG16-Transformer models), Bi-directional Long Short-Term Memory (Bi-LSTM)- Transformer, and Transformer with Support Vector Machine (SVM) using different audio feature extraction techniques. In our approach, we utilize three audio attribute extraction techniques: Mel spectrogram (Mel), Mel Frequency Cepstral Coefficient (MFCC), and Short-Time Fourier Transform (STFT) as input representations. The results of our evaluation with instances of real and fake speech using the ASVspoof LA dataset with hybrid transformer models across various audio features indicate that the STFT feature performs best with the ResNet34-Transformer model, achieving a state-of-the-art performance with a development set equal error rate (EER) of 0.0% and evaluation set EER of 3.22%, surpassing all other methods. In terms of accuracy, the STFT feature also performed best with the VGG16-Transformer model, achieving a development set accuracy of 99.55% and an evaluation set accuracy of 94.04%. These results indicate that the proposed study achieved better performance compared to the baseline and state-of-the-art methods.

INDEX TERMS Transformer, CNN-Transformer, ResNet-Transformer, VGG16-Transformer, Transformer-SVM, fusion models, features.

I. INTRODUCTION

Audio classification involves analyzing and categorizing audio signals into different groups, making it a crucial tool in audio signal processing. This process helps to organize, analyze, and interpret audio signals, providing insights into their underlying structure and content. Audio classification has a variety of applications in numerous fields and products, including virtual assistants, automated voice translators, environmental sound recognition, music genre identification, and text-to-speech systems. Broadly, audio classification encompasses acoustic data, speech, music, environmental sound, and natural language classification [1].

Speech classification is considered more important than detection because it involves not only identifying the presence of speech but also determining the specific characteristics

The associate editor coordinating the review of this manuscript and approving it for publication was Abdel-Hamid Soliman.

© 2024 The Authors. This work is licensed under a Creative Commons Attribution-NonCommercial-NoDerivatives 4.0 License.
For more information, see https://creativecommons.org/licenses/by-nc-nd/4.0/

or content of the speech, such as differentiating between normal speech and shouted speech, speech and music, or conversational and read speech [2], [3]. Detection focuses on recognizing the presence or absence of speech signals in a given audio input, while classification goes one step further by categorizing speech segments into different classes or types based on various attributes [2]. This distinction is crucial in applications such as speech recognition systems or audio event analysis, where the context or characteristics of speech need to be precisely identified [3], [4]. In speech recognition, accurate classification of speech helps in improving the performance of the system by enabling better interpretation and understanding of the spoken content [5].

Moreover, the classification of fake speech, fueled by advancements like deepfake technology, holds critical importance across various domains. Fake speech, often indistinguishable from real speech, poses significant threats, including the dissemination of misinformation and manipulation of public opinion. Moreover, it presents security risks by enabling impersonation in fraudulent activities such as phishing and blackmail. The legal and ethical implications are profound, prompting questions regarding regulation, accountability, and responsible use. Additionally, fake speech affects content creation by undermining trust in audiovisual media and necessitating the development of verification tools. Thus, effective detection and classification methods are essential to combat misinformation, protect privacy and security, address legal and ethical challenges, and uphold the integrity of audiovisual content.

To tackle the challenges of fake speech classification, we propose novel hybrid transformer-based models together with different audio feature analysis techniques. To the best of our knowledge, none of the existing methods explored the specific combinations of different hybrid transformer architectures in detail together with different audio feature extraction techniques. With the proposed approach, the state-of-the-art performances are achieved for fake speech classification on ASVspoof LA dataset, surpassing all other methods. Several ablation experiments are conducted to obtain the best hyperparameters combinations. In particular, simple transformer models are compared with the proposed hybrid transformer models with different audio features, including Convolutional Neural Network (CNN)-Transformer (i.e., ResNet-Transformer and VGG16-Transformer models), Bi-directional Long Short-Term Memory (Bi-LSTM)-Transformer, and Transformer with Support Vector Machine (SVM) using different audio feature extraction techniques, address several unexplored areas in the ASVspoof 2019 dataset studies. Unlike the existing literature that focuses on individual models of traditional machine learning and conventional features [6], [7], [8], [9], [10], [11], [12], [13], [14], [15], [16], [17], our work introduces novel hybrid architectures and provides a direct comparative analysis with pure models, demonstrating superior performance using ResNet-Transformer with STFT features. The proposed approach utilizes three audio attribute extraction techniques: Mel spectrogram (Mel), Mel Frequency Cepstral Coefficient (MFCC), and Short-Time Fourier Transform (STFT) as input representations. By exploring diverse feature representations, particularly highlighting the effectiveness of STFT, and employing unique optimization and training strategies, our research sets new performance benchmarks. Additionally, this work enhances understanding of the robustness and generalization capabilities of hybrid models across various spoofing attacks and suggests potential benefits of ensemble methods with hybrid architectures, contributing significant advancements to the field of spoof detection. While several recent studies have begun to incorporate transformer models (e.g., Vision Transformer, Compact Convolutional Transformer, PS3DT, AST) for detecting synthetic and spoofed speech [18], [19], [20], [21], [22], [23], none of the existing methods explored the specific combinations and comparisons we present here, making our findings a significant contribution to the field, which forms the main novelty of our work.

Our evaluations are performed using instances of real and fake speech on the ASVspoof LA dataset with hybrid transformer models across various audio features. Specifically, CNN-Transformer (i.e., ResNet-Transformer, VGG16-Transformer), Bi-LSTM Transformer, and transformer with classical classifiers such as Transformer-SVM are evaluated using different audio features. STFT spectrograms, mel-spectrogram, and MFCC features are tested with these hybrid transformer models. We also incorporate data augmentation techniques such as time stretching and time shifting into the datasets and introduce additional feature engineering functions such as the Synthetic Minority Oversampling Technique (SMOTE) to create synthetic samples for the lower class to balance the dataset.

The scalability and adaptability of transformer-based models are key advantages. These models can quickly adapt to new spoofing techniques and thereby ensure continued robust performance, which is crucial in the fast-evolving field of voice security. Moreover, the application of these models extends beyond ASV systems to areas such as fraud detection, voice assistants, smart home security, and customer service authentication.

Section II of this paper provides information on various transformer architectures utilized in audio classification, as well as different deep learning architectures utilized in the ASVspoof 2019 classification and detection. In Section III, we describe the datasets and transformer architectures utilized for classification. Section IV presents the evaluation details and reports the results. We conclude Section V with a brief summary and mention of future work.

II. RELATED WORK

Recently, several studies have focused on audio classification, using various features and deep learning models to accurately classify audio signals. Reference [24] created a spectrogram transformer for environmental sound classification. Using

FFT for spectrograms and transformer encoder attention blocks, they found the temporal-frequency attention block excelled on the ESC-50 dataset without pre-training and achieved 57.24% classification accuracy. Reference [25] explored patch-level feature fusion using ViTs for audio classification. They converted audio signals into Mel spectrogram patches, input them to a ViT encoder for feature fusion, and utilized an MLP for classification. Using ImageNet and AudioSet pre-trained weights, they achieved a classification accuracy of 98.13%. Reference [26] analyzed transformer versus baseline CNN models for urban sound classification. They compared transformer, CNN, DenseNet, Inception-V3, and pre-training with data augmentation through experiments on UrbanSound8K, ESC-50, and ESC-10, and found that the transformer model using transfer learning from AudioSet achieved the highest accuracy of 99%. Reference [27] addressed efficiency issues in deep learning models for audio classification, focusing on reducing parameter size to fit microcontroller memory limits. They proposed a tiny transformer using a BERT-based architecture trained on Mel-spectrogram images and explored various data augmentation techniques. This model, which had around 6,000 parameters, achieved a 99.85% accuracy on the ESC-50 dataset for environmental sound classification. Reference [28] enhanced the Audio Spectrogram Transformer (AST) with a self-supervised learning strategy to address the need for large training samples. Their method integrates a generative model that learns from masked spectrogram patches, improving transformer performance in small domains with limited data. Experiments on unlabeled audio data from AudioSet and Librispeech showed an average improvement of 60.9% across various tasks. Reference [29] tackled the challenge of efficiently training transformer models for audio data by introducing a patchout spectrogram transformer, optimizing and regularizing transformer on audio spectrograms to enhance training efficiency. Their approach surpassed CNNs in both performance and training speed, as demonstrated through experiments on AudioSet. Reference [30] proposed a Swin Transformer for music genre classification, incorporating self-supervised pre-training. This model converts audio signals into spectrograms, applies data augmentation, and utilizes transfer learning for pre-training. Their experiments on the GTZAN dataset demonstrated enhanced accuracy, achieving the classification accuracy of 97.2%. Reference [31] introduced ASiT, a self-supervised transformer for audio/speech classification. ASiT obtains general audio representations by implementing group-masked model learning and self-distillation. It achieved a state-of-the-art performance on datasets including Speech Commands, with a classification accuracy of 98.8%. Reference [32] introduced the Causal Audio Transformer (CAT) for improved audio modeling, achieving a classification accuracy of 97.2% on the ESC50, AudioSet, and UrbanSound8K datasets. [33] demonstrated the effectiveness of transformer for music genre classification, obtaining a classification accuracy of 76.0% on GTZAN. [34] proposed a bi-directional transformer for music genre classification, achieving 94% accuracy on the Lakh MIDI dataset. Reference [35] introduced a transformer-based architecture for audio classification on the FSD50K dataset, processing raw audio signals directly without convolutional layers. Their approach achieved a classification accuracy of 53.7%, leveraging pooling techniques from CNNs and multi-rate signal processing ideas from wavelets. Reference [36] proposed the Hierarchical Token Semantic Audio Transformer (HTS-AT) to address high memory and long training times, eliminating the need for pre-trained models from the image domain. HTS-AT achieved a state-of-the-art performance on speech-command recognition, with classification accuracies of 97% and 98% on AudioSet and ESC50, respectively. Reference [37] compared the performance of PaSST against CNNs in zero-shot learning settings and found that it outperformed them on AudioSet, ESC-50, and OpenMIC with a classification accuracy of 80.47%. Reference [36] proposed a Multi-scale AST (MAST) for audio classification, integrating multi-scale feature hierarchies. MAST achieved a classification accuracy of 97.4% on the VoxCeleb (VC) and Speech Commands (SC) datasets. Reference [38] introduced another MAST variant, incorporating hierarchical learning into AST. This MAST utilized 1D and 2D pooling operations to reduce feature dimensions and achieved an 81.3% classification accuracy on VGGSound and AudioSet. Reference [39] presented a convolution-free transformer-based framework for multi-modal data learning in a kinetics environment and were able to achieve a classification accuracy of 97.1% by fine-tuning audio data according to AudioSet.

Nautsch et al. [6] utilized CQCC-GMM and LFCC-GMM baseline methods on the ASVspoof 2019 dataset and reported error rates of 0.43% and 2.71% on the development set and 9.57% and 8.09% on the evaluation set, respectively. Reference [7] proposed SE-ResNet, X-vector Network (TDNN), DenseNet, MobileNetV2, ShuffleNetV2, and MNASNet architectures and evaluated them on the ASVspoof 2019 dataset. Among these, the best error rates on the development set were 0.00%, with an evaluation set error rate of 10.80%. Reference [8] introduced the LSTM-CNN model, achieving a detection accuracy of 88% on the ASVspoof 2019 dataset. Reference [9] proposed the ResNet-34 architecture, achieving error rates of 0.90% on the development set and 5.32% on the evaluation set of the ASVspoof 2019 dataset. Reference [10] presented three ensemble models with error rates ranging from 0.00% to 2.64% on the development set and from 9.57% to 10.63% on the evaluation set of the ASVspoof 2019 dataset. Reference [11] proposed STM (Mel FB)-LCNN, STM (CBW FB)-LCNN, and STM (ERB FB)-LCNN models, achieving error rates of 0.04%, 0.09%, and 0.02% on the development set and 0.79%, 13.46%, and 8.33% on the evaluation set of the ASVspoof 2019 dataset. Reference [18] proposed the Spectrogram images Constant-Q-Vision transformer, which achieved an error rate of 11.02% on the evaluation set

of the ASVspoof 2019 dataset. Reference [12] introduced Spec+ResNet+CE, Spec+SENet34, CQCC, SENet50, and Dilated ResNet models, achieving error rates of 6.70% and 11.75% on the evaluation set of the ASVspoof 2019 dataset. Reference [13] presented CQCC-DNN, eCQCC-DNN, and CQSPIC-DNN models, which achieved error rates ranging from 0.14%, 0.15%, and 0.34% on the development set to 14.64%, 8.25%, and 8.87% on the evaluation set of the ASVspoof 2019 dataset. Das et al. [14]introduced Front ends IFCC, CQ-EST, CQ-OST, CQSPIC, and CMC-DNN models, achieving error rates of 0.000% on the development set and 11.08%, 08.82%, and 04.13% on the evaluation set of the ASVspoof 2019 dataset. Reference [15] proposed the Spectrogram-CNN model, achieving error rates of 0.00% on the development set and 9.57% on the evaluation set of the ASVspoof 2019 dataset. Reference [16] presented MFCC-ResNet, Spec-ResNet, and CQCC-ResNet models, achieving error rates of 3.34%, 0.11%, and 0.01% on the development set and 9.33%, 9.68%, and 7.69% on the evaluation set of the ASVspoof 2019 dataset. Reference [19] introduced the Compact Convolutional Transformer (CCT), achieving an accuracy of 92.13% on the ASVspoof 2019 dataset. Reference [40] proposed the CQCC-Siamese CNN and LFCC-Siamese CNN models, achieving error rates of 0.15% and 0.71% on the development set and 8.75% and 3.79% on the evaluation set, respectively, on the ASVspoof 2019 dataset. Reference [41] presented a Spectrogram-CNN model, achieving an accuracy of 85.99% on the evaluation set of the ASVspoof 2019 dataset.

III. PROPOSED HYBRID TRANSFORMER MODELS USING VARIOUS AUDIO FEATURE EXTRACTION TECHNIQUES FOR FAKE SPEECH CLASSIFICATION

In this section, we first describe the fake speech dataset and the data augmentation techniques we applied. Then, we discuss the different audio feature extraction techniques that are utilized in this work. Finally, we present the details of the hybrid transformer models we implemented in our approach.

A. ASVSPOOF LA DATASET AND DATA AUGMENTATION

ASVspoof 2019 gathers and shares standardized datasets of genuine and spoofed speech signals to create platforms for comparative assessments of spoofing countermeasures [42]. ASVspoof 2019 re-conceptualized the types into two scenarios: logical access (VC and TTS) and physical access (replay attacks across varied environments) [42], [43]. Our study focuses on utilizing the logical access (LA) datasets for classification tasks utilizing various transformer models. These datasets present a significant challenge due to their high-class imbalance nature, with genuine instances comprising only 10% of the dataset. Unlike typical detection tasks (which are shown in Table 1), our approach tackles the classification of spoofed speech instances. Consequently, conventional data augmentation techniques are found to be inadequate for addressing the unique challenges posed by these datasets.

TABLE 1. Statistics of the ASVspoof 2019 datasets (durations with three values denoted with minimum/average/maximum).

Dataset	Bonafide	Spoof	Total	Duration (sec)
Training	2,580	24,072	26,652	0.65 / 3.42 / 13.19
Development	2,548	22,296	24,844	0.69 / 3.49 / 16.51
Evaluation	7,355	63,882	71,237	0.47 / 3.14 / 16.55

We utilize three data augmentation techniques to address the class imbalance problem in the ASVspoof 2019 dataset: time stretching, time shifting, and the Synthetic Minority Oversampling Technique (SMOTE). The time stretching techniques are used to modify the playback speed of the speech without affecting pitch (time stretching) or vice versa (pitch shifting) to simulate variations in speech rate. This can help the model generalize better for different speaking styles. The time stretching algorithms manipulate the audio signal to change its playback speed without affecting pitch, e.g., by dividing the audio signal into small segments or overlapping and reconstructing the modified segments back into a continuous audio signal. Time shifting is a technique that introduces small (milliseconds) time shifts to the audio to compensate for potential delays or microphone positioning variations. This can enhance robustness against minor timing discrepancies. Time shifting involves introducing a delay (τ) to the entire audio signal, as

$$y(t) = x(t - \tau). \tag{1}$$

where y(t) is the time-shifted signal, x(t) is the original signal, and (τ) is the time delay (positive for delaying, negative for advancing). SMOTE is a technique for addressing class imbalance in machine learning datasets. It specifically focuses on oversampling the minority class by creating synthetic data points. A new synthetic data point X_{new} is created by adding a scaled version of the difference vector to the original point, as

$$X_{\text{new}} = X_i + r(X_{\text{nn}} - X_i). \tag{2}$$

where X_i is the original minority class sample, X_{nn} is one of the k-nearest neighbors of X_i, and r is a random number between 0 and 1. The number of utterances of bonafide data is 2,580. After applying the SMOTE technique, bonafide class data becomes equal to the number of spoof data, which is 24,072, by creating synthetic data points.

B. DIFFERENT AUDIO FEATURES

Feature extraction methods offer essential representations for tasks like speech recognition and music classification, capturing key characteristics of audio signals for further analysis and modeling. In this study, we implement a variety of different feature extraction techniques.

Short-Time Fourier Transform (STFT) is a fundamental tool in speech processing, used primarily for analyzing the frequency content of speech signals over time. Discrete

Fourier Transform (DFT) is a technique used to extract features from raw audio signals, converting signals from the time domain to the frequency domain to acquire the phase and magnitude of every frequency component. However, DFT is not optimized and is difficult to apply to real-time discrete signals. Fast Fourier Transform (FFT), an optimized version of DFT, can be applied to real-time discrete signals and is defined as

$$S(k) = \sum_{n=0}^{N-1} S(n) e^{-j\frac{2\pi}{N}kn}. \tag{3}$$

The magnitude spectrum $|S(k)|$ of a signal is the magnitude of its frequency bin or frequency component number k at a given sample number n. It is usually a complex value [44]. Short-Time Fourier Transform (STFT) is an improved version of Fourier Transform (FT) that provides temporal details of signals in both the time and frequency domains. By using a window in STFT, the signal is divided into fixed-sized time-domain segments. Each segment is then subjected to FT to reveal different features of the signal. Essentially, STFT utilizes equally spaced, identical, and symmetrical bandpass filters in the frequency domain to analyze the signal. The mathematical formulation of any signal $s(t)$ can be written as

$$S(f, t) = \int_{-T}^{T} s(\tau) w(\tau - t) e^{-j2\pi f \tau} \, d\tau. \tag{4}$$

To obtain this representation, the signal $s(t)$is partitioned into segments over a windowing function w(t) in Eq. (4). The window length must be the same as the length of the signal segments, and it is assumed that the signal does not change (i.e., is stationary) inside a window duration. The spectrogram is obtained using STFT by taking the magnitude squared value of the time-frequency representation [1], expressed as

$$\text{Spectrogram} = |S(f, t)|^2. \tag{5}$$

A Mel-spectrogram, however, can be obtained using the raw signal. Inspired by the human auditory system, the Mel scale provides a linear scale in relation to Hertz [46], [47], as

$$M(f) = 2595 \log_{10}\left(1 + \frac{f}{700}\right). \tag{6}$$

where $M(f)$ is the Mel frequency for a given frequency f. It is derived from a logarithmic scale and is related to the way humans perceive sound [47].The formula is based on the assumption that frequencies have a logarithmic relationship to pitch, so it is utilized to convert frequencies into a Mel-frequency scale, which better represents how humans perceive pitch.

Mel-Frequency Cepstral Coefficients (MFCCs) are other features extracted by applying a Discrete Cosine Transform (DCT) to the Mel-scale power spectrum, as

$$\text{MFCC}_l = \sum_{n=0}^{N-1} S(m) \cos\left(\frac{\pi}{M}(m + 0.5) \cdot l\right). \tag{7}$$

where MFCC_l represents the l-th MFCC coefficient, $S(m)$ is the magnitude of the signal in the m-th Mel-filtered bin, M is the number of Mel-filtered bins, and l is the index of the MFCC coefficient, ranging from 0 to $L - 1$. where L is typically 13 or more. This formula describes the DCT operation which applied to the power spectrum of the obtained MFCCs.

We use the following three features in this study: The Mel-spectrogram, a variant of the spectrogram, which converts the frequency axis to the Mel scale with dimensions similar to the spectrogram (e.g., `max_pad_length` = 300, `sr` = 16,000) but with `n_mels` = 80. Mel Frequency Cepstral Coefficients (MFCCs), which provide a compact representation of the spectral envelope of an audio signal, with dimensions of $(n_{\text{mfcc_coefficients}}, n_{\text{time_frames}})$ with $n_{\text{mfcc}} = 18$.The spectrogram, which represents the frequencies of a signal over time, typically has dimensions of $(n_{\text{freq_bins}}, n_{\text{time_frames}})$ and is computed using the Short-Time Fourier Transform (STFT) with parameters $n_{\text{fft}} = 512$ and `hop_length` = 512. Figure 1 depicts visualizations of each feature's ability to distinguish between bonafide and spoof speech samples. We implemented the t-SNE tool for visualization, utilizing a selection of 2,500 bonafide and spoof samples using Principal Component Analysis (PCA). The audio features (Mel-spectrogram, MFCC, and STFT spectrogram) exist in a high-dimensional space, with each dimension representing a specific aspect of the audio. PCA aims to simplify this by finding the most informative directions in that space. The projection of data points reduced space (3D with axes labeled x, y, and z). Ideally, there will be a separation between the "spoof" and "bonafide" classes based on their feature values, and these points will form two distinct clusters representing each class. By visually inspecting the distribution of points in the t-SNE plot, we can get a sense of how well the two classes are separated based on their extracted features. In the t-SNE plot, each data point (representing an audio sample) is positioned using the following coordinates:

- x, which represents the value on the horizontal axis of the plot;
- y, which represents the value on the vertical axis of the plot; and
- z (3D), which represents the position along the depth axis.

These coordinates determine the location of each data point in the reduced-dimensionality space, allowing us to visualize potential clustering patterns between the spoof and bonafide classes based on their audio features. The visualizations shown in Fig. 1 indicates that STFT is better at separating between the spoof and bonafide classes compared to Mel-spectrogram and MFCC.

C. HYBRID TRANSFORMER MODELS

We use three fundamental audio features—Mel-spectrogram, MFCC, and STFT—as input to various hybrid transformer

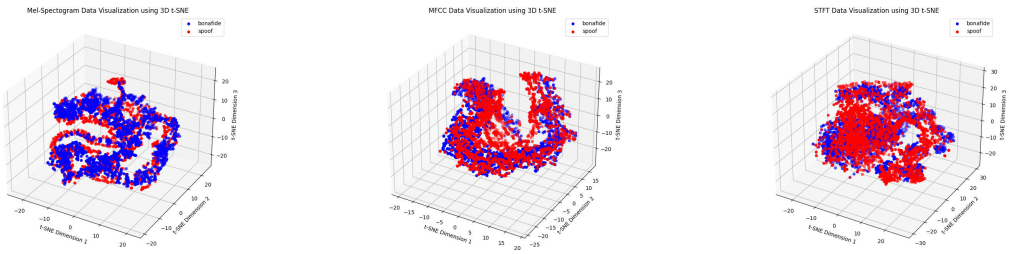

(a) (b) (c)

FIGURE 1. Feature visualization for datasets using 3D-t-SNE: (a) Mel-spectrogram, (b) MFCC, and (c) STFT spectrogram.

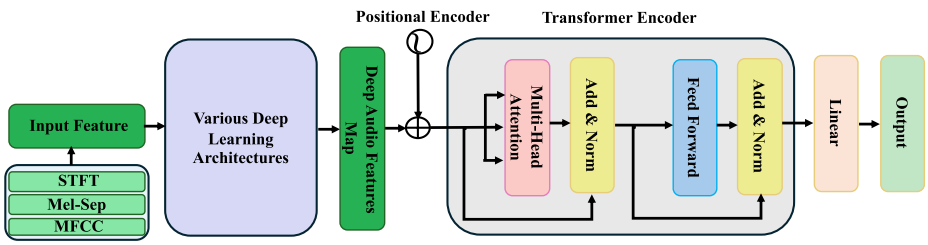

FIGURE 2. Block diagram of proposed hybrid transformer approach.

architectures, including simple transformer, Transformer-SVM, CNN-Transformer, ResNet34-Transformer, and VGG16-Transformer. Various deep learning architectures are integrated with the transformer architecture to form hybrid models. Figure 2 shows how a transformer attention mechanism (including multi-head attention and related layers) is attached to different deep learning architectures to extract deep audio features, enhancing their capability to handle sequential data effectively.

Transformer involve several key components and equations that define their operation, particularly the self-attention mechanism, which is the heart of the architecture. The main formulas used in transformer are shown below. The core operation is the scaled dot-product attention which, given queries Q, keys K, and values V, is computed as

$$\text{Attention}(Q, K, V) = \text{softmax}\left(\frac{QK^T}{\sqrt{d_k}}\right)V. \tag{8}$$

These parameters play a crucial role in attention calculation. Multi-head attention aggregates multiple self-attention maps through comprehensive matrix operations, as

$$\text{MultiHeadAttention}(Q, K, V) = \text{concat}(S_1, \ldots, S_h) W^{\text{head}}. \tag{9}$$

where $S_h = \text{Attention}(QW_h^Q, KW_h^K, VW_h^V)$, h is the number of parallel attention layers (heads), and W^{head}, W_h^Q, W_h^K, and W_h^V are trained parameter matrices. In Position-wise Feed-Forward Networks, each layer in the transformer includes a fully connected feed-forward network applied to each position separately and identically. This consists of two linear transformations with a ReLU activation in between:

$$\text{FFN}(x) = \max(0, xW_1 + b_1)W_2 + b_2. \tag{10}$$

where W_1 and W_2 are weight matrices, b_1 and b_2 are bias vectors, and ReLU is the activation function. In Positional Encoding, since transformer have no inherent knowledge of the order of tokens, positional encodings are added to the input embeddings to provide this information. For a position pos and dimension i,

$$\text{PE}_{(pos,2i)} = \frac{pos}{1000^{\frac{2i}{d_{\text{model}}}}}. \tag{11}$$

$$\text{PE}_{(pos,2i+1)} = \frac{pos}{1000^{\frac{2i}{d_{\text{model}}}}}. \tag{12}$$

In Layer Normalization and Residual Connections, each sub-layer (attention or feed-forward) in the transformer is wrapped in a residual connection followed by layer normalization, as

$$\text{LayerNorm}(x + \text{Sublayer}(x)). \tag{13}$$

Here, Sublayer(x) can be either the multi-head attention output or the feed-forward network output.

1) TRANSFORMER

Figure 3 depicts a transformer encoder architecture with a focus on how input features are processed through various stages to produce the final output, which is combined with positional encodings and then processed through a series of transformer encoder layers (Positional Encoder, multi-head attention, feed-forward network, and normalization steps). The Positional Encoder adds positional information to the

input features, enabling the transformer model to account for the order of elements in the sequence. The transformer module includes both an encoder and a decoder. The transformer layers utilize multi-head self-attention and feed-forward neural networks to capture complex relationships in the data. In Feedforward module, each layer also includes feedforward neural networks that apply additional transformations to the data processed by self-attention. Dropout is used to prevent overfitting during training by randomly dropping units in the neural network layers. Adaptive Avg. Pool reduces the dimensionality of the transformer output to a fixed size to ensure compatibility with the fully connected layer, regardless of input size. The Fully Connected Layer takes the pooled output and produces final predictions, which are typically class labels. The output layer is the final predictions or classifications produced by the model.

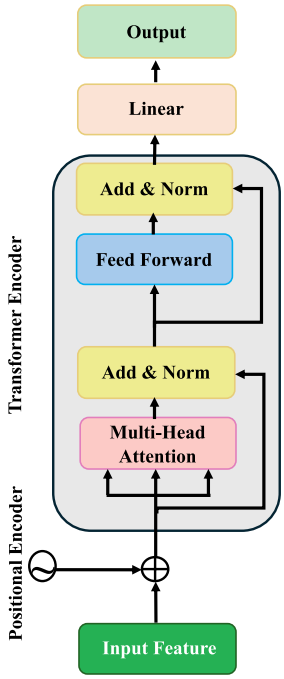

FIGURE 3. Block diagram of transformer.

2) TRANSFORMER-SVM

This hybrid transformer model with SVM (Fig.4) processes the input data through layers comprising self-attention mechanisms and feedforward neural networks, allowing it to weigh the importance of different input parts and generate representations. After generating these representations, global average pooling is applied to reduce the sequence dimension and obtain a fixed-size feature vector. These representations, which capture crucial input features, are then fed into an SVM classifier, which identifies the optimal decision boundary in the feature space to classify the data. The SVM outputs predicted class labels based on this learned boundary, while an additional layer, classification confidence, provides confidence scores indicating the model's certainty about its predictions. Collectively, these components enable effective data processing and classification, with each layer contributing uniquely to the model's functionality.

3) CNN-TRANSFORMER

The CNN-Transformer model (Fig. 5) combines convolutional neural networks (CNNs) with the transformer architecture. During the processing, the model first applies a 1D convolutional layer to the input data, which extracts local features. These features are referred to as the feature map in the diagram. The feature map is then passed to the transformer layers to capture global dependencies. Convolutional layers at the beginning are used to handle local patterns in the input data. In this context, the CNN-Transformer model can capture both local patterns (by the CNN part) and global patterns (by the transformer part), potentially improving performance on tasks where local features are important. In summary, the CNN model gives leverage to the transformer architecture for processing sequential data, and the CNN-Transformer model augments this architecture with convolutional layers to capture both local and global patterns in the input data, potentially enhancing its performance on certain tasks compared to the standalone transformer model.

4) RESNET34-TRANSFORMER

The ResNet-Transformer model (Fig. 6) combines ResNet's capabilities with transformer's sequential data handling. This fusion allows the model to extract hierarchical features from audio inputs, thereby enhancing the classification performance across diverse datasets. In our work, we tested ResNet-34 and ResNet-50 and found that ResNet-34 had better results thanks to its complex architecture. In ResNet-34, residual connections are crucial because they help mitigate the vanishing gradient problem, which often hampers the training of deep neural networks. These connections, also known as skip connections, allow the network to bypass one or more layers by adding the input of a layer to the output of a deeper layer. This enables the network to learn identity mappings, ensuring that gradients can flow more easily through the network during backpropagation. Consequently, residual connections help maintain the integrity of the gradient, facilitating the training of very deep networks and improving both convergence speed and overall performance. By allowing the network to learn residual functions rather than unreferenced functions, ResNet-34 achieves significant improvements in both accuracy and generalization.

5) BI-LSTM TRANSFORMER

The Bi-LSTM Transformer model (Fig. 7) merges Bidirectional Long Short-Term Memory (Bi-LSTM) networks with the transformer architecture, enabling it to capture both short-term and long-range dependencies in audio sequences. Thanks to incorporating Bi-LSTM layers, the model can consider both past and future audio inputs, effectively capturing temporal dynamics. This integration facilitates a comprehensive understanding of audio data, leading to robust

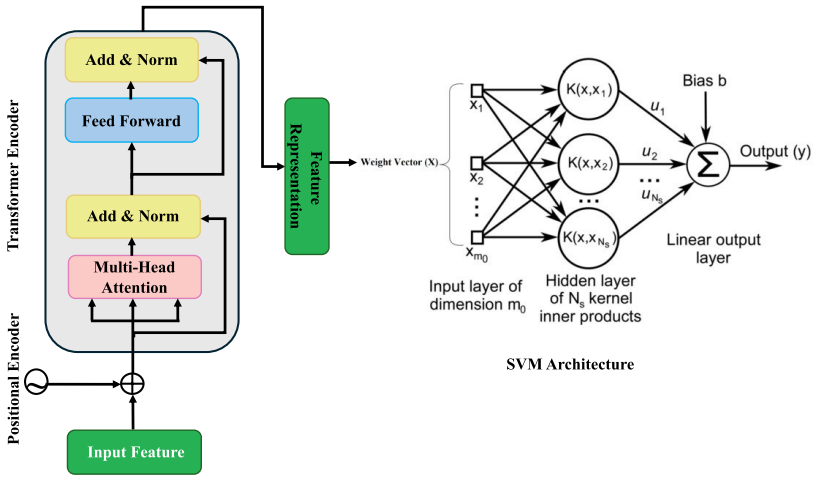

FIGURE 4. Block diagram of Transformer-SVM.

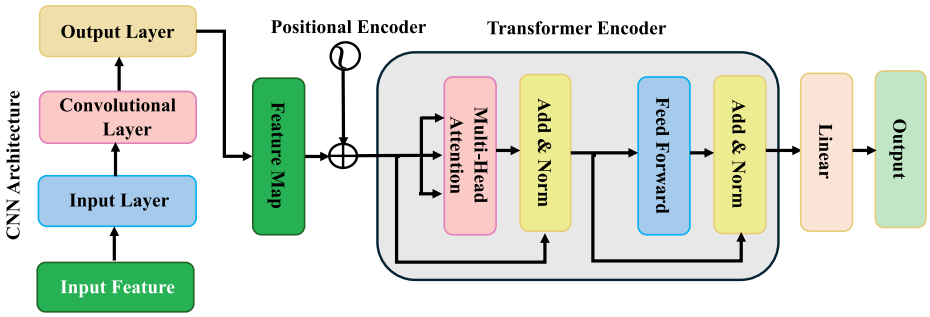

FIGURE 5. Block diagram of CNN transformer.

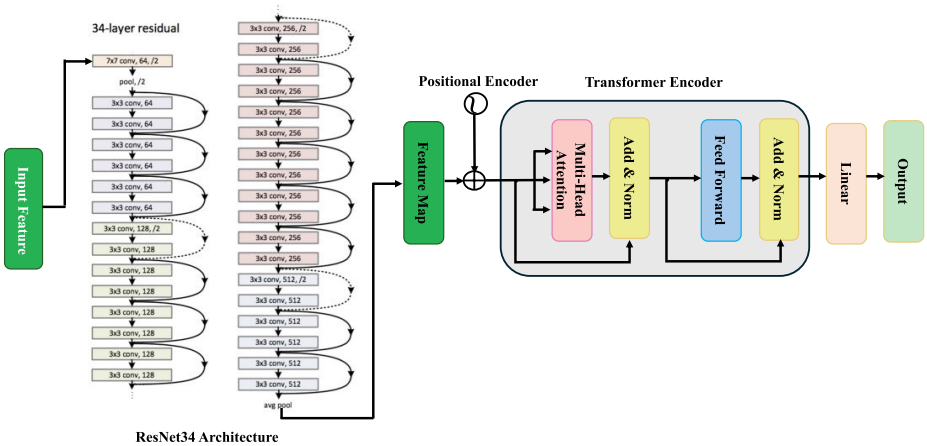

FIGURE 6. Block diagram of ResNet34-transformer.

performances in tasks requiring nuanced temporal analysis and context integration.

6) VGG16-TRANSFORMER

The VGG16-transformer model (Fig. 8) integrates VGG16 with the Transformer architecture, leveraging VGG16's deep convolutional features and the Transformer's attention mechanism. By amalgamating these components, the model achieves enhanced feature extraction capabilities, enabling it to discern intricate patterns and nuances in sequential data. This comprehensive understanding enables the model to deliver a superior performance in various classification tasks.

IV. EVALUATION AND RESULTS

In this section, we discuss the evaluation results obtained using different transformer models on the ASVspoof 2019 dataset for fake speech classification.

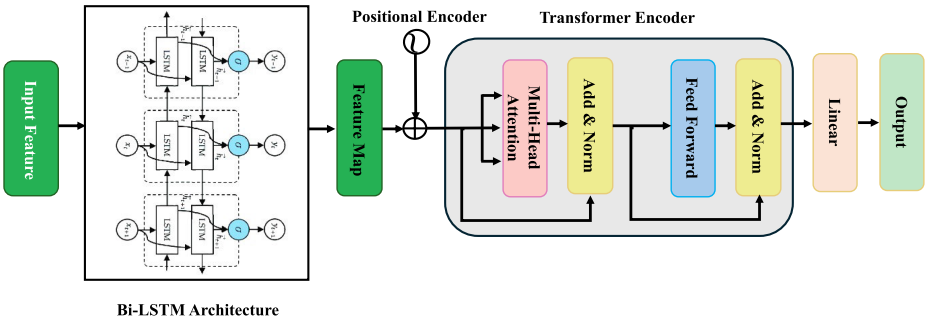

FIGURE 7. Block diagram of Bi-LSTM transformer.

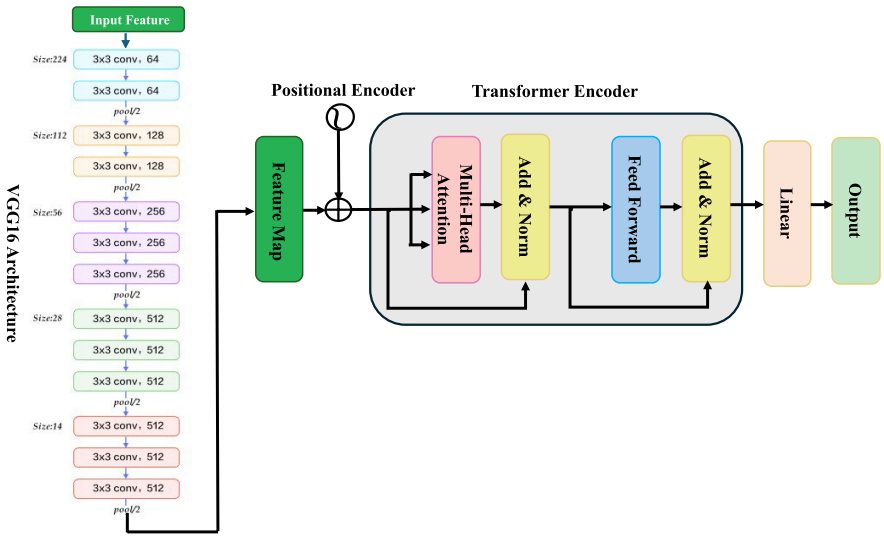

FIGURE 8. Block diagram of VGG16-transformer.

A. EXPERIMENTAL SETUP

To classify the bonafide and spoof classes on the ASVspoof 2019 dataset, we trained the hybrid transformer models described in the previous section with various audio feature extraction techniques (Mel spectrogram, MFCC, and STFT) in order to determine the most suitable feature extraction techniques for each transformer model: Transformer, Transformer-SVM, CNN-Transformer, ResNet-Transformer, Bi-LSTM-Transformer, and VGG-Transformer. All models are trained with 26,625 audio samples, 24,844 validation samples, and 71,236 test samples with the ratio of 21.70%, 20.2%, and 58.05% for training, development, and evaluation, respectively. The different transformer model for audio classification is trained with carefully selected hyperparameters (shown in 2) to optimize its performance. The setup of the parameters is explained below. For the evaluations, we used a computer with the specifications shown in Fig 9.

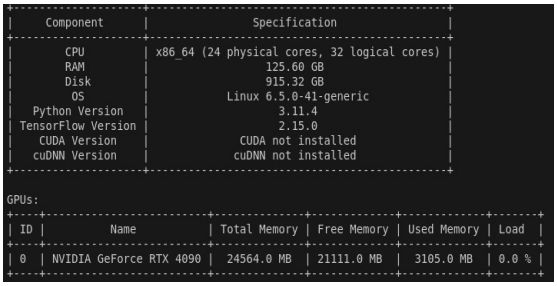

Component	Specification
CPU	x86_64 (24 physical cores, 32 logical cores)
RAM	125.60 GB
Disk	915.32 GB
OS	Linux 6.5.0-41-generic
Python Version	3.11.4
TensorFlow Version	2.15.0
CUDA Version	CUDA not installed
cuDNN Version	cuDNN not installed

GPUs:

ID	Name	Total Memory	Free Memory	Used Memory	Load
0	NVIDIA GeForce RTX 4090	24564.0 MB	21111.0 MB	3105.0 MB	0.0 %

FIGURE 9. Memory information.

B. COMPARISON OF DIFFERENT AUDIO FEATURES WITH VARIOUS TRANSFORMER MODELS

1) MEL-SPECTROGRAM WITH TRANSFORMER

Table 3 lists the performance of Mel-spectrogram features as feature extractors across different transformer models. As we can see, ResNet-Transformer and Bi-LSTM-Transformer, especially when combined with Mel-spectrogram features, demonstrated a superior performance compared to all other models. In the transformer architecture, we utilize four attention heads, two encoder and decoder layers, and a dropout rate of 0.1. The results show that the Mel-Spectrogram features performed well using all the proposed hybrid transformer models, particularly with the ResNet-Transformer model. Figure 10 shows the error rate reduction (ERR) and confusion matrix performance of the Mel-Spectrogram feature in our experimental framework. In Fig. 10(a), the ERR values of the development and evaluation sets indicate

TABLE 2. Hyperparameters across different transformer models.

Hyperparameter	Transformer	Transformer-SVM	CNN-Transformer	ResNet-Transformer	Bi-LSTM-Transformer	VGG-Transformer
Epoch	30	30	30	30	30	30
Batch size	32	32	32	32	32	64
Learning rate	0.0001	0.0001	0.0001	0.0001	0.0001	0.0001
Optimizer	Adam	Adam	Adam	Adam	Adam	Adam
No. of heads	4	4	4	4	4	4
Encoder layers	2	2	2	2	2	2
Decoder layers	2	2	2	2	2	2
D_model	64	64	64	64	64	64
Dropout rate	0.1	0.1	0.1	0.1	0.1	0.1

that the development ERR is lower than the evaluation ERR. Using Mel-Spectrogram features, on the development set, Transformer-SVM hybrid model received the highest development accuracy of 98.80%, while ResNet-Transformer achieved the lowest development EER rate of 4.56%. On the evaluation set, similarly, ResNet-Transformer achieved the best evaluation accuracy of 92.17%. Figure 10(b) and (c) show the confusion matrix for the development set and the evaluation set, respectively, where we can see that the classification performance on the development set is better. For a comparison with other audio features, the bottom row of Table 3 shows the overall average results. Please note that due to a memory issue regarding storing the previous results for the Bi-LSTM-Transformer model, we do not report any results for this model (the GPU ran out of memory).

TABLE 3. Mel-spectrogram features across different transformer models (top results).

Model	Development set (%)		Evaluation set (%)	
	Accuracy	EER	Accuracy	EER
Transformer	94.21	13.53	89.98	16.36
Transformer-SVM	**98.80**	11.36	88.51	16.24
CNN-Transformer	94.45	8.93	89.01	16.16
ResNet-Transformer	97.86	**4.56**	**92.17**	**13.27**
Bi-LSTM-Transformer	–	–	–	–
VGG-Transformer	97.87	5.51	90.25	13.52
Overall average	96.64	8.78	89.98	15.11

2) MFCC WITH TRANSFORMER

Table 4 presents the performance of MFCC features as feature extractors across various transformer models. Among all models, ResNet-Transformer (98.74% accuracy and 1.13% ERR on the development set) and Bi-LSTM-Transformer (91.61% accuracy on the evaluation set) performed the best. ResNet-Transformer leverages the spatial hierarchies in the MFCC spectrogram, while Bi-LSTM-Transformer benefits from the temporal dependencies, together leading to an improved performance. Figure 11 depicts the ERR and confusion matrix performance of the MFCC feature in our experimental framework. Figure 11(a) shows the ERR of the development and evaluation sets, where we can see that the development ERR is lower than the evaluation ERR. Figure 11(b) and (c) present the confusion matrix for the development set and the evaluation set, respectively, where we can see that the classification performance on the development set is better than on the evaluation set. Table 4 shows the overall average values in order to compare with the average results of other models. Compared to the overall average results of the Mel-Spectrogram features, the MFCC features perform better, especially in the overall error rates.

TABLE 4. MFCC features across different transformer models (top results).

Model	Development set (%)		Evaluation set (%)	
	Accuracy	EER	Accuracy	EER
Transformer	94.69	8.83	88.69	15.56
Transformer-SVM	94.83	8.87	87.47	15.44
CNN-Transformer	94.54	8.83	87.73	15.32
ResNet-Transformer	**98.74**	**1.13**	90.21	**13.24**
Bi-LSTM-Transformer	95.87	7.44	**91.61**	13.34
VGG-Transformer	98.31	3.11	88.41	13.80
Overall average	96.16	6.37	89.02	14.45

3) STFT WITH TRANSFORMER

Table 5 shows the performance of STFT features as feature extractors across different transformer models. Compared to Mel-spectrogram and MFCC features, STFT consistently demonstrated a better performance across all transformer models. Specifically, the ResNet34-Transformer and VGG16-Transformer models, when integrated with STFT features, exhibited a superior performance compared to all other transformer models. Both CNN models (ResNet34 and VGG16) apply strong local feature extraction in their deep CNN architectures before feeding the extracted features to the transformer architecture. STFT also provides a detailed view of the audio signal's frequency content, which can then be used by the VGG16-Transformer or ResNet34-Tranformer model to extract the local features. Then, the transformer side extracts the global relations from the features for a more robust fake speech classification. Our comparative analysis revealed that the STFT feature outperformed both the Mel-spectrogram and MFCC features across our proposed hybrid models, particularly in the VGG16-Transformer model with the top development accuracy and the top evaluation accuracy. Figure 12 shows the ERR and confusion matrix results, affirming the superior performance of the STFT feature. Figure 12(a) shows the ERR of the development and evaluation sets, where we can see that the development

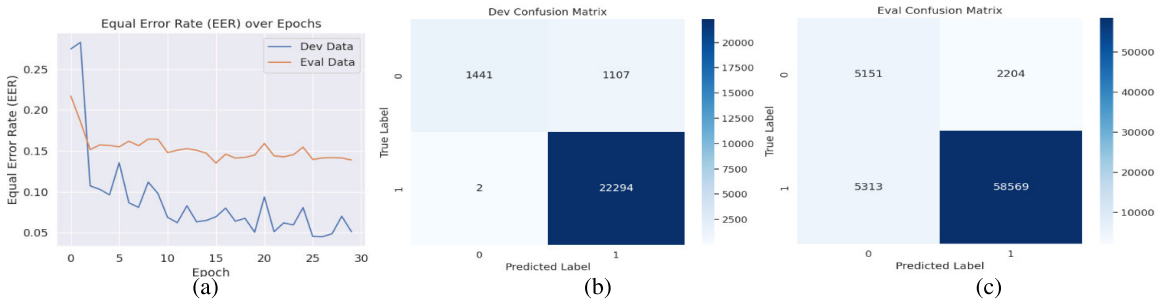

FIGURE 10. Performance of ResNet-Transformer using Mel Spectrogram. (a) EER for development and evaluation sets. (b) Development set confusion matrix. (c) Evaluation set confusion matrix.

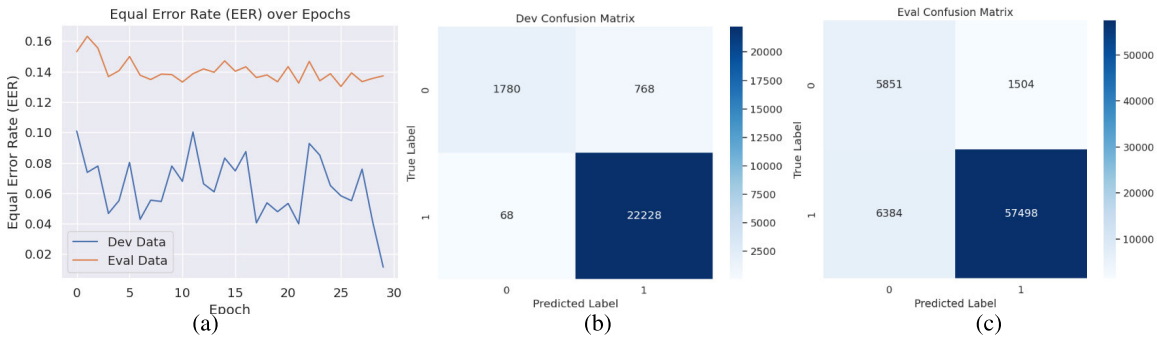

FIGURE 11. Performance of ResNet-Transformer using MFCC. (a) EER for development and evaluation sets. (b) Development set confusion matrix. (c) Evaluation set confusion matrix.

ERR is lower than the evaluation ERR. Figure 12(b) and (c) show the confusion matrix for the development set and the evaluation set, respectively, where it is clear that the classification performance on the development set is better. The overall average values are shown in Table 5 to provide a comparison with other models.

TABLE 5. STFT features across different transformer models (top results).

Model	Development set (%)		Evaluation set (%)	
	Accuracy	EER	Accuracy	EER
Transformer	96.01	7.44	90.69	12.90
Transformer-SVM	98.71	6.74	89.48	12.53
CNN-Transformer	98.79	2.16	91.52	9.08
ResNet-Transformer	99.10	1.75	90.95	9.63
Bi-LSTM-Transformer	–	–	–	–
VGG-Transformer	**99.55**	**0.06**	**93.36**	**8.29**
Overall average	98.43	3.63	91.20	10.49

C. ABLATION STUDY

We conducted an ablation study to investigate the effect of varying hyperparameters such as batch size, optimizers, and number of epochs on the performance of the VGG16-Transformer model and ResNet34-Transformer model using STFT, since STFT delivered the best performance using these two models.

1) CHANGING BATCH SIZE

Changing the batch size while keeping the other parameters constant led to different results for the VGG16-Transformer model, as summarized in Table 6. Specifically, as the batch size increased, the model's performance improved. The best performance was achieved with a batch size of 64.

ResNet34-Transformer achieved the lowest error rate, but in some epochs, our models experienced overfitting or underfitting when using a batch size of 32. Despite this, the overall performance was the best on both the development and evaluation sets with a batch size of 32. Conversely, using a batch size of 128 resulted in the highest scores on the development set, as summarized in Table 7.

2) OPTIMIZERS

We compared several different optimizers to investigate the performance of various hybrid transformer models: CNN-Transformer, VGG16-Transformer, and RESNET34-Transformer,as shown in Tables 8, 9, and 10. Across these models, we observed that, on average, the Adam optimizer outperformed both SGD and RMSprop. Notably, the RMSprop optimizer demonstrated a superior performance specifically in the ResNet34-Transformer model.

For CNN-Transformer with STFT, the best optimizer for Dev ERR was Adam with 1.50 (batch size: 32), and for Eval ERR was Adam with 8.65 (batch size: 128). For VGG16-Transformer with STFT, the best optimizer for both Dev ERR (0.66) and Eval ERR (8.29) was Adam at batch size 64. For ResNet34-Transformer with STFT, the best optimizer for Dev ERR was RMSprop with 0.00 (batch sizes: 32, 64, 128, 256), and for Eval ERR was RMSprop with 3.22 (batch size: 64).

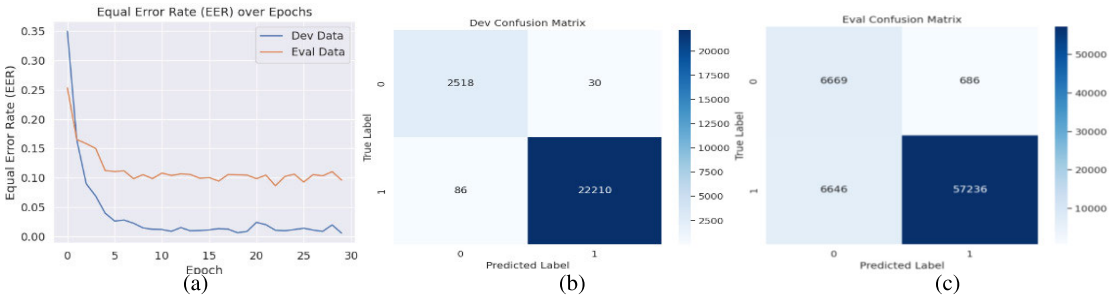

FIGURE 12. Performance of VGG16-Transformer using STFT. (a) EER for development and evaluation sets. (b) Development set confusion matrix. (c) Evaluation set confusion matrix.

TABLE 6. Changing batch size of VGG16-Transformer with STFT.

Batch size	N-head	Encoder	Decoder	Dropt	Development set (%)		Evaluation set (%)	
					Accuracy	EER	Accuracy	EER
32	4	2	2	0.1	98.29	2.65	93.03	10.63
64	4	2	2	0.1	**99.55**	**0.06**	**93.36**	**8.29**
128	4	2	2	0.1	99.44	0.08	91.75	9.43
256	4	2	2	0.1	98.64	2.90	93.82	9.61

TABLE 7. Changing batch size of ResNet34-transformer with STFT.

Batch size	N-head	Encoder	Decoder	Dropt	Development set (%)		Evaluation set (%)	
					Accuracy	EER	Accuracy	EER
32	4	2	2	0.1	99.78	0.015	**92.37**	**7.97**
64	4	2	2	0.1	99.92	0.012	86.22	9.20
128	4	2	2	0.1	**99.91**	**0.011**	87.48	8.81
256	4	2	2	0.1	99.72	0.040	90.72	8.15

TABLE 8. Different optimizers with CNN-transformer and STFT.

Model	Batch size	N-head	Encoder	Decoder	Dropt	Optimizer	Dev Acc	Dev EER	Eval Acc	Eval EER
CNN-Transformer	32	4	2	2	0.1	Adam	**99.23**	**1.50**	**92.20**	9.18
						SGD	98.32	2.90	91.52	**8.99**
						RMSprop	96.47	2.42	90.24	11.00
CNN-Transformer	64	4	2	2	0.1	Adam	97.79	**1.88**	90.14	**10.19**
						SGD	97.66	3.42	**90.25**	10.78
						RMSprop	**98.13**	2.48	90.01	10.70
CNN-Transformer	128	4	2	2	0.1	Adam	**99.04**	**1.60**	91.84	**8.65**
						SGD	97.06	4.59	90.66	11.38
						RMSprop	98.04	3.10	**92.61**	11.07
CNN-Transformer	256	4	2	2	0.1	Adam	95.65	4.09	**90.14**	**11.53**
						SGD	94.05	9.45	89.66	14.11
						RMSprop	**97.60**	**3.36**	89.92	12.20

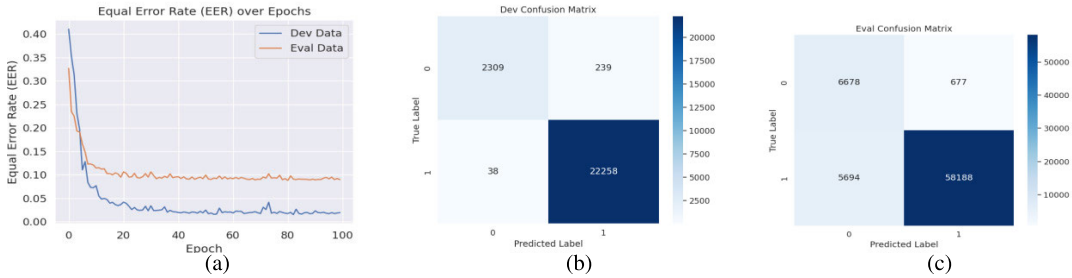

FIGURE 13. CNN Transformer using 100 epochs. (a) EER for development and evaluation sets. (b) Development set confusion matrix. (c) Evaluation set confusion matrix.

For accuracy, the best optimizer for CNN-Transformer with STFT in Dev was Adam with 99.23 (batch size: 32), and for Eval was Adam with 92.20 (batch size: 32). For VGG16-Transformer with STFT, the best optimizer in Dev

TABLE 9. Different optimizers with VGG16-Transformer and STFT.

Model	Batch size	N-head	Encoder	Decoder	Dropt	Optimizer	Dev Acc	Dev EER	Eval Acc	Eval EER
VGG-Transformer	32	4	2	2	0.1	Adam	**98.31**	**2.77**	**93.03**	**10.79**
						SGD	90.85	11.64	88.69	15.26
						RMSprop	89.74	21.23	89.68	19.19
VGG-Transformer	64	4	2	2	0.1	Adam	**99.55**	**0.66**	**93.36**	**8.29**
						SGD	90.15	12.49	89.64	15.54
						RMSprop	97.06	4.03	88.89	21.52
VGG-Transformer	128	4	2	2	0.1	Adam	**99.44**	**0.80**	**91.84**	**9.43**
						SGD	89.86	11.98	89.68	14.99
						RMSprop	99.32	1.52	91.69	10.37
VGG-Transformer	256	4	2	2	0.1	Adam	98.10	2.56	**94.04**	**9.89**
						SGD	89.74	28.62	89.68	20.69
						RMSprop	**98.66**	**2.04**	91.06	10.41

TABLE 10. Different optimizers with ResNet34-transformer and STFT.

Model	Batch size	N-head	Encoder	Decoder	Dropt	Optimizer	Dev Acc	Dev EER	Eval Acc	Eval EER
ResNet34-Transformer	32	4	2	2	0.1	Adam	99.78	0.01	**92.37**	**7.97**
						SGD	**99.85**	0.02	90.73	20.91
						RMSprop	99.05	**0.00**	89.28	11.03
ResNet34-Transformer	64	4	2	2	0.1	Adam	**99.92**	0.01	86.22	9.20
						SGD	99.71	0.02	84.36	16.95
						RMSprop	99.76	**0.00**	**89.67**	**3.22**
ResNet34-Transformer	128	4	2	2	0.1	Adam	**99.91**	0.01	87.48	8.81
						SGD	99.74	0.03	82.83	18.96
						RMSprop	99.85	**0.00**	**90.85**	**4.16**
ResNet34-Transformer	256	4	2	2	0.1	Adam	**99.72**	0.04	**90.72**	8.15
						SGD	99.05	1.74	87.74	11.12
						RMSprop	99.15	**0.00**	89.61	**6.30**

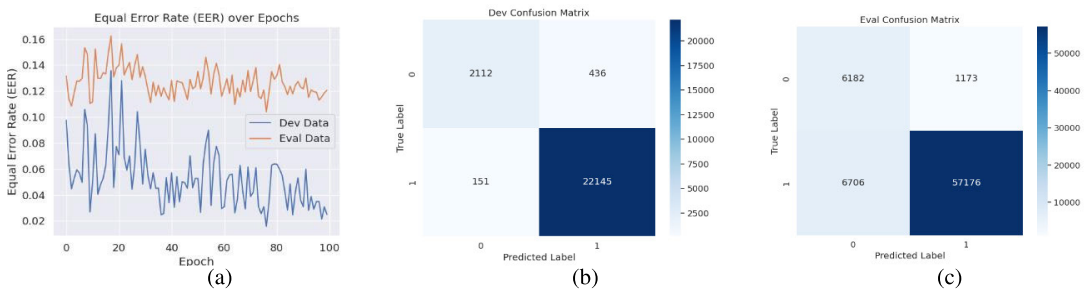

FIGURE 14. VGG16 Transformer using 100 epochs. (a) EER for development and evaluation sets. (b) Development set confusion matrix. (c) Evaluation set confusion matrix.

TABLE 11. Evaluation by 100 epochs of different transformer models.

Model	Development set (%)		Evaluation set (%)	
	Accuracy	EER	Accuracy	EER
CNN-Transformer	98.90	2.19	91.44	9.03
ResNet-Transformer	99.84	0.00	90.65	6.63
VGG-Transformer	99.62	1.75	92.89	10.89
Overall Average	99.45	3.77	91.66	8.85

was Adam with 99.55 (batch size: 64), and for Eval was Adam with 94.04 (batch size: 256). For ResNet34-Transformer with STFT, the best optimizer in Dev was Adam with 99.92 (batch size: 64), and for Eval was Adam with 92.37 (batch size: 32).

3) EPOCH

We also experimented with different epochs for the best batch size for CNN-Transformer, VGG16-Transformer with Adam optimizer, and ResNet34-Transformer with RMSprop optimizer, but did not observe any improvements,as shown in Table 11.The EER values and confusion matrices for the Dev and Eval sets after 100 epochs are illustrated in Fig13, 14, and 15,respectively.

4) COMPARISON WITH RELATED WORK

The comparison in Table 12 shows that our methods, particularly the VGG-Transformer and ResNet-Transformer with Adam and RMSProp optimizers, achieve significantly higher performances compared to other approaches, with an accuracy up to 99.78% and EER as low as 0.00% for the development set, and 94.04% accuracy and 3.22% EER for the evaluation set. These results indicate that our proposed method surpasses both the baseline and state-of-the-art approaches.

V. DISCUSSION

The Mel-spectrogram feature performed best with the ResNet-Transformer model, achieving the best ERR on both the development set (4.57%) and the evaluation set

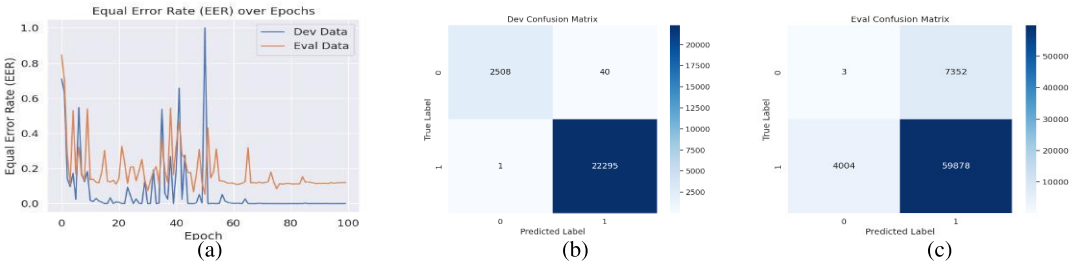

FIGURE 15. ResNet Transformer using 100 epochs. (a) EER for development and evaluation sets. (b) Development set confusion matrix. (c) Evaluation set confusion matrix.

TABLE 12. Comparing development and evaluation set results of related works.

Study	Method	Development set (%)		Evaluation set (%)	
		Accuracy	EER	Accuracy	EER
[6]	Baseline-1 CQCC-GMM		0.43		09.57
	Baseline-2 LFCC-GMM		2.71		08.09
[7]	SE-ResNet		0.004		13.13
	X-vector Network (TDNN)		0.00		14.45
	DenseNet		0.00		11.02
	MobileNetV2		0.00		10.80
	ShuffleNetV2		0.00		13.66
	MNASNet		0.00		11.65
[15]	Spectrogram-CNN		0.00		09.57
[8]	LSTM-CNN			88.00	
[41]	Spectrogram-CNN			85.99	
[9]	ResNet-34 architecture		0.90		05.32
[10]	Ensemble Models-1		0.00		02.64
	Ensemble Models-2		0.03		09.57
	Ensemble Models-3		0.20		10.63
[11]	STM (Mel FB)-LCNN		0.04		09.79
	STM (CBW FB)-LCNN		0.09		13.46
	STM (ERB FB)-LCNN		0.02		08.33
[12]	Spec+ResNet+CE				11.75
	Spec+SENet34, CQCC, SENet50, and Dilated ResNet				06.70
[13]	CQCC-DNN		0.14		14.64
	eCQCC-DNN		0.15		08.25
	CQSPIC-DNN		0.34		08.87
[14]	eCQCC-DNN		0.000		11.08
	Front-ends IFCC, CQ-EST, CQ-OST, CQSPIC, and CMC-DNN		0.000		08.82
	Fusion of 9 front-ends (except MFCC feature)		0.000		04.13
[16]	MFCC-ResNet		03.34		9.33
	Spec-ResNet		0.11		9.68
	CQCC-ResNet		0.01		7.69
[17]	CQCC-Siamese CNN		0.15		8.75
	LFCC-Siamese CNN		0.71		3.79
[19]	Compact Convolutional Transformer (CCT)			92.13	
[18]	Spectrogram images constant-Vision transformer				11.02
[20]	First digit distribution with Transformer				16.37
[21]	Mel-Spectrogram with Transformer				8.29
[22]	Log spectrogram with Transformer				17.51
[23]	Multi-feature approaches, and learning-based features with transformer				24.27
	VGG-Transformer	99.55	0.06	93.36	8.29
Ours	ResNet-Transformer (Adam)	99.78	0.01	92.37	7.97
	ResNet-Transformer (RMSProp)	99.76	0.00	89.67	3.22

(13.27%). In terms of accuracy, the Mel-spectrogram feature performed best with the ResNet-Transformer model as well, achieving an evaluation accuracy of 92.17%, while the Transformer-SVM model attained the highest accuracy on the development set (98.80%). The MFCC feature performed best with the ResNet-Transformer model, achieving the

best ERR on both the development set (1.13%) and the evaluation set (13.24%). In terms of accuracy, the MFCC feature performed best with the Bi-LSTM-Transformer model, achieving an evaluation accuracy of 91.61%, while the ResNet-Transformer model attained the highest accuracy on the development set (98.74%). The STFT feature performed best with the VGG16-Transformer model, achieving the best ERR on both the development set (0.06%) and the evaluation set (8.29%). In terms of accuracy, the STFT feature performed best with the VGG16-Transformer model, achieving a development set accuracy of 99.55% and evaluation set accuracy of 93.36%. The CNN-Transformer using STFT achieved the best ERR on the development set (2.16) and on the evaluation set (9.08). Similarly, ResNet using STFT achieved the best ERR on the development set (2.71) and on the evaluation set (9.63). These findings demonstrate that STFT features are effective when combined with various transformer models: they consistently outperformed all other features, achieving the highest scores across the board. In our ablation study, we found that ResNet34-Transformer outperformed all other models. Notably, changing the optimizer yielded the best results. For ResNet34-Transformer with STFT, RMSprop was the most effective optimizer, achieving a Dev ERR of 0.00 across various batch sizes (32, 64, 128, 256). For Eval ERR, RMSprop also performed best with a score of 3.22 at a batch size of 64. These findings indicate that our proposed method surpasses both the baseline and state-of-the-art approaches. In terms of accuracy, VGG16-Transformer model outperformed all other models with a STFT feature while changing the optimizer yielded the best results. VGG16-Transformer model with a Adam optimizer, achieving a development set accuracy of 99.55% and an evaluation set accuracy of 94.04 Our experimental results show that on the ASVspoof LA dataset, the STFT feature with the ResNet34-Transformer model achieved a state-of-the-art performance with a development set equal error rate (EER) of 0.0 and evaluation set EER of 3.22, surpassing all other methods. In terms of accuracy, the STFT feature also performed best with the VGG16-Transformer model, achieving a development set accuracy of 99.55% and an evaluation set accuracy of 94.04%.

VI. CONCLUSION

Considering the growing threat of fake audio content, particularly within the domain of deepfake speech, we developed a novel classification methodology tailored to classify real and fake speech. Our approach integrates Mel-spectrograms and Mel-frequency cepstral coefficients (MFCC) alongside Short-Time Fourier Transform (STFT) features as input representations, and these features are then processed through a diverse ensemble of transformer models and fusion strategies within a deep neural network (DNN) framework. The objective of this methodology is to accurately classify instances of real and fake speech using the ASVspoof LA dataset, thereby facilitating the precise identification and categorization of manipulated speech content across audio communication channels. Our findings showed that the STFT feature performed best with a ResNet34-Tspoofransformer model, achieving the best ERR on both the development set (0.6%) and the evaluation set (3.22%). In terms of accuracy, the STFT feature performed best with the VGG16-transformer model, achieving a development set accuracy of 99.55% and evaluation set accuracy of 94.04%. These results demonstrate that the proposed study outperforms both baseline and state-of-the-art methods. Additional work in the future will involve dealing with datasets that are not balanced, examining how various loss functions along with regularization techniques affect model training, and developing uncertainty estimation techniques to measure the certainty in model predictions. Moreover, for advancing the proposed methodology's robustness and applicability in real-world scenarios, it will be essential to enhance model fusion techniques, explore hybrid feature representations, optimize transformer architectures, and address domain adaptation challenges. Promising model fusion techniques involve combining predictions from multiple models to improve the overall performance, which may include approaches such as averaging predictions or using ensemble methods like boosting or bagging.

REFERENCES

[1] K. Zaman, M. Sah, C. Direkoglu, and M. Unoki, "A survey of audio classification using deep learning," *IEEE Access*, vol. 11, pp. 106620–106649, 2023, doi: 10.1109/ACCESS.2023.3318015.

[2] K. Phapatanaburi, L. Wang, M. Liu, S. Nakagawa, T. Jumphoo, and P. Uthansakul, "Significance of relative phase features for shouted and normal speech classification," *EURASIP J. Audio, Speech, Music Process.*, vol. 2024, no. 1, Jan. 06, 2024, pp. 1–19, doi: 10.1186/s13636-023-00324-4.

[3] B. Schuppler, "Rethinking classification results based on read speech, or: Why improvements do not always transfer to other speaking styles," *Int. J. Speech Technol.*, vol. 20, no. 3, pp. 699–713, Jul. 18, 2017, doi: 10.1007/s10772-017-9436-y.

[4] H. Phan, P. Koch, F. Katzberg, M. Maass, R. Mazur, I. McLoughlin, and A. Mertins, "What makes audio event detection harder than classification?" in *Proc. 25th Eur. Signal Process. Conf. (EUSIPCO)*, Aug. 2017, pp. 2739–2743, doi: 10.23919/EUSIPCO.2017.8081709.

[5] W.-H. Shin, B.-S. Lee, Y.-K. Lee, and J.-S. Lee, "Speech/non-speech classification using multiple features for robust endpoint detection," in *Proc. IEEE Int. Conf. Acoust., Speech, Signal Process.*, vol. 3, May 2019, pp. 1399–1402, doi: 10.1109/ICASSP.2000.861845.

[6] A. Nautsch, X. Wang, N. Evans, T. H. Kinnunen, V. Vestman, M. Todisco, H. Delgado, M. Sahidullah, J. Yamagishi, and K. A. Lee, "ASVspoof 2019: Spoofing countermeasures for the detection of synthesized, converted and replayed speech," *IEEE Trans. Biometrics, Behav., Identity Sci.*, vol. 3, no. 2, pp. 252–265, Apr. 2021, doi: 10.1109/TBIOM.2021.3059479.

[7] S. Yoon and H.-J. Yu, "BPCNN: Bi-point input for convolutional neural networks in speaker spoofing detection," *Sensors*, vol. 22, no. 12, p. 4483, Jun. 14, 2022, doi: 10.3390/s22124483.

[8] I. Altalahin, S. AlZu'bi, A. Alqudah, and A. Mughaid, "Unmasking the truth: A deep learning approach to detecting deepfake audio through MFCC features," in *Proc. Int. Conf. Inf. Technol. (ICIT)*, vol. 2, Aug. 09, 2023, pp. 511–518, doi: 10.1109/icit58056.2023.10226172.

[9] R. T P, P. R Aravind, R. C, U. Nechiyil, and N. Paramparambath, "Audio spoofing verification using deep convolutional neural networks by transfer learning," 2020, *arXiv:2008.03464*.

[10] B. Chettri, D. Stoller, V. Morfi, M. A. M. Ramírez, E. Benetos, and B. L. Sturm, "Ensemble models for spoofing detection in automatic speaker verification," in *Proc. Interspeech*, Sep. 15, 2019, pp. 1–15, doi: 10.21437/interspeech.2019-2505.

[11] H. Cheng, C. O. Mawalim, K. Li, L. Wang, and M. Unoki, "Analysis of spectro-temporal modulation representation for deep-fake speech detection," in *Proc. Asia–Pacific Signal Inf. Process. Assoc. Annu. Summit Conf. (APSIPA ASC)*, vol. 2, Oct. 2023, pp. 1822–1829.

[12] C.-I. Lai, N. Chen, J. Villalba, and N. Dehak, "ASSERT: Anti-spoofing with squeeze-excitation and residual networks," in *Proc. Interspeech*, Sep. 15, 2019, pp. 1–20.

[13] R. K. Das, J. Yang, and H. Li, "Assessing the scope of generalized countermeasures for anti-spoofing," in *Proc. IEEE Int. Conf. Acoust., Speech Signal Process. (ICASSP)*, May 2020, pp. 6589–6593, doi: 10.1109/ICASSP40776.2020.9053086.

[14] R. K. Das, J. Yang, and H. Li, "Long range acoustic and deep features perspective on ASVspoof 2019," in *Proc. IEEE Autom. Speech Recognit. Understand. Workshop (ASRU)*, Singapore, Dec. 2019, pp. 1018–1025, doi: 10.1109/ASRU46091.2019.9003845.

[15] T. Nosek, S. Suzic, B. Papic, and N. Jakovljevic, "Synthesized speech detection based on spectrogram and convolutional neural networks," in *Proc. 27th Telecommun. Forum (TELFOR)*, Nov. 2019, pp. 1–4, doi: 10.1109/TELFOR48224.2019.8971215.

[16] M. Alzantot, Z. Wang, and M. B. Srivastava, "Deep residual neural networks for audio spoofing detection," in *Proc. Interspeech*, Sep. 15, 2019, pp. 1–27, doi: 10.21437/interspeech.2019-3174.

[17] A. Kumar Singh Yadav, Z. Xiang, K. Bhagtani, P. Bestagini, S. Tubaro, and E. J. Delp, "Compression robust synthetic speech detection using patched spectrogram transformer," 2024, *arXiv:2402.14205*.

[18] G. Ulutas, G. Tahaoglu, and B. Ustubioglu, "Deepfake audio detection with vision transformer based method," in *Proc. 46th Int. Conf. Telecommun. Signal Process. (TSP)*, Jul. 12, 2023, pp. 244–247, doi: 10.1109/tsp59544.2023.10197715.

[19] E. R. Bartusiak and E. J. Delp, "Synthesized speech detection using convolutional transformer-based spectrogram analysis," in *Proc. 55th Asilomar Conf. Signals, Syst., Comput.*, Oct. 31, 2021, pp. 1426–1430, doi: 10.1109/IEEECONF53345.2021.9723142.

[20] A. B. Talagini Ashoka, L. Cuccovillo, and P. Aichroth, "Audio transformer for synthetic speech detection via Benford's law distribution analysis," in *Proc. 3rd ACM Int. Workshop Multimedia AI Against Disinformation*, vol. 78, Jun. 10, 2024, pp. 23–29, doi: 10.1145/3643491.3660288.

[21] A. K. Singh Yadav, Z. Xiang, K. Bhagtani, P. Bestagini, S. Tubaro, and E. J. Delp, "PS3DT: Synthetic speech detection using patched spectrogram transformer," in *Proc. Int. Conf. Mach. Learn. Appl. (ICMLA)*, Dec. 15, 2023, pp. 1–23, doi: 10.1109/icmla58977.2023.00075.

[22] L. Cuccovillo, M. Gerhardt, and P. Aichroth, "Audio spectrogram transformer for synthetic speech detection via speech formant analysis," in *Proc. IEEE Int. Workshop Inf. Forensics Security (WIFS)*, Dec. 4, 2023, pp. 1–22, doi: 10.1109/wifs58808.2023.10374615.

[23] Y. Yang, H. Qin, H. Zhou, C. Wang, T. Guo, K. Han, and Y. Wang, "A robust audio deepfake detection system via multi-view feature," in *Proc. IEEE Int. Conf. Acoust., Speech Signal Process. (ICASSP)*, Apr. 14, 2024, pp. 1–14, doi: 10.1109/icassp48485.2024.10446560.

[24] Y. Zhang, B. Li, H. Fang, and Q. Meng, "Spectrogram transformers for audio classification," in *Proc. IEEE Int. Conf. Imag. Syst. Techn. (IST)*, Jun. 21, 2022, pp. 1–6, doi: 10.1109/IST55454.2022.9827729.

[25] J. Luo, J. Yang, E. S. Chng, and X. Zhong, "Vision transformer based audio classification using patch-level feature fusion," in *Proc. Asia–Pacific Signal Inf. Process. Assoc. Annu. Summit Conf. (APSIPA ASC)*, Nov. 07, 2022, pp. 22–26, doi: 10.23919/APSIPAASC55919.2022.9980194.

[26] A. F. R. Nogueira, H. S. Oliveira, J. J. M. Machado, and J. M. R. S. Tavares, "Transformers for urban sound classification—A comprehensive performance evaluation," *Sensors*, vol. 22, no. 22, p. 8874, Nov. 16, 2022, doi: 10.3390/s22228874.

[27] S. Wyatt, D. Elliott, A. Aravamudan, C. E. Otero, L. D. Otero, G. C. Anagnostopoulos, A. O. Smith, A. M. Peter, W. Jones, S. Leung, and E. Lam, "Environmental sound classification with tiny transformers in noisy edge environments," in *Proc. IEEE 7th World Forum Internet Things (WF-IoT)*, Jun. 14, 2021, pp. 309–314, doi: 10.1109/WF-IoT51360.2021.9596007.

[28] Y. Gong, C.-I. Lai, Y.-A. Chung, and J. Glass, "SSAST: Self-supervised audio spectrogram transformer," in *Proc. AAAI Conf. Artif. Intell.*, Jun. 2022, vol. 36, no. 10, pp. 10699–10709, doi: 10.1609/aaai.v36i10.21315.

[29] K. Koutini, J. Schlüter, H. Eghbal-zadeh, and G. Widmer, "Efficient training of audio transformers with patchout," 2021, *arXiv:2110.05069*.

[30] H. Zhao, C. Zhang, B. Zhu, Z. Ma, and K. Zhang, "S3T: Self-supervised pre-training with Swin transformer for music classification," in *Proc. IEEE Int. Conf. Acoust., Speech Signal Process. (ICASSP)*, May 2022, pp. 606–610.

[31] S. Atito, M. Awais, W. Wang, M. D Plumbley, and J. Kittler, "ASiT: Local-global audio spectrogram vIsion transformer for event classification," 2022, *arXiv:2211.13189*.

[32] X. Liu, H. Lu, J. Yuan, and X. Li, "CAT: Causal audio transformer for audio classification," 2023, *arXiv:2303.07626*.

[33] Y. Zhuang, Y. Chen, and J. Zheng, "Music genre classification with transformer classifier," in *Proc. 4th Int. Conf. Digit. Signal Process.*, Jun. 2020, pp. 155–159.

[34] L. Qiu, S. Li, and Y. Sung, "DBTMPE: Deep bidirectional transformers-based masked predictive encoder approach for music genre classification," *Mathematics*, vol. 9, no. 5, p. 530, Mar. 2021.

[35] P. Verma and J. Berger, "Audio transformers: Transformer architectures for large scale audio understanding. Adieu convolutions," 2021, *arXiv:2105.00335*.

[36] K. Chen, X. Du, B. Zhu, Z. Ma, T. Berg-Kirkpatrick, and S. Dubnov, "HTS-AT: A hierarchical token-semantic audio transformer for sound classification and detection," in *Proc. IEEE Int. Conf. Acoust., Speech Signal Process. (ICASSP)*, May 2022, pp. 646–650.

[37] P. Primus and G. Widmer, "Improved zero-shot audio tagging & classification with patchout spectrogram transformers," in *Proc. 30th Eur. Signal Process. Conf. (EUSIPCO)*, Aug. 29, 2104, pp. 410–413.

[38] W. Zhu and M. Omar, "Multiscale audio spectrogram transformer for efficient audio classification," 2023, *arXiv:2303.10757*.

[39] H. Akbari, L. Yuan, R. Qian, W.-H. Chuang, S.-F. Chang, Y. Cui, and B. Gong, "VATT: Transformers for multimodal self-supervised learning from raw video, audio and text," 2021, *arXiv:2104.11178*.

[40] Z. Lei, Y. Yang, C. Liu, and J. Ye, "Siamese convolutional neural network using Gaussian probability feature for spoofing speech detection," in *Proc. Interspeech*, Oct. 25, 2020, pp. 1–17, doi: 10.21437/interspeech.2020-2723.

[41] E. R. Bartusiak and E. J. Delp, "Frequency domain-based detection of generated audio," 2022, *arXiv:2205.01806*.

[42] M. Todisco, X. Wang, V. Vestman, M. Sahidullah, H. Delgado, A. Nautsch, J. Yamagishi, N. Evans, T. H. Kinnunen, and K. A. Lee, "ASVspoof 2019: Future horizons in spoofed and fake audio detection," in *Proc. Interspeech*, Sep. 15, 2019, pp. 1–16, doi: 10.21437/interspeech.2019-2249.

[43] X. Wang et al., "ASVspoof 2019: A large-scale public database of synthesized, converted and replayed speech," *Comput. Speech Lang.*, vol. 64, Nov. 2020, Art. no. 101114, doi: 10.1016/j.csl.2020.101114.

[44] K. Zaman, M. sah, and C. Direkoglu, "Classification of harmful noise signals for hearing aid applications using spectrogram images and convolutional neural networks," in *Proc. 4th Int. Symp. Multidisciplinary Stud. Innov. Technol. (ISMSIT)*, Oct. 22, 2020, pp. 1–9, doi: 10.1109/ISMSIT50672.2020.9254451.

[45] S. L. Ullo, S. K. Khare, V. Bajaj, and G. R. Sinha, "Hybrid computerized method for environmental sound classification," *IEEE Access*, vol. 8, pp. 124055–124065, 2020, doi: 10.1109/ACCESS.2020.3006082.

[46] B. Vamsi, M. Mahanty, and B. P. Doppala, "An auto encoder–decoder approach to classify the bird sounds using deep learning techniques," *Social Netw. Comput. Sci.*, vol. 4, no. 3, pp. 1–28, Mar. 27, 2023, doi: 10.1007/s42979-023-01686-4.

[47] B. Zhang, J. Leitner, and S. Thornton. (2019). *Audio Recognition Using Mel Spectrograms and Convolution Neural Networks*. Accessed: Aug. 10, 2024. [Online]. Available: https://noiselab.ucsd.edu/ECE228_2019/Reports/Report38.pdf

KHALID ZAMAN received the bachelor's degree in telecommunication and networks from Abasyn University, Peshawar, Pakistan, in 2016, and the master's degree in computer engineering from Near East University, North Cyprus, Türkiye, in 2019. He is currently pursuing the Ph.D. degree with the Graduate School of Advanced Science and Technology, Japan Advanced Institute of Science and Technology (JAIST), Japan. His current research interests include digital speech processing, human auditory perception, deepfake audio detection, and classification, with a focus on applying deep learning methods.

ISLAM J. A. M. SAMIUL is currently pursuing the master's degree with the Graduate School of Advanced Science and Technology, Japan Advanced Institute of Science and Technology (JAIST), Japan. His research interests include speech processing, deepfake audio detection, with a focus on signal processing and artificial intelligence methods, and natural language processing (NLP), computer vision, image processing, and multimodal learning.

MELIKE SAH received the B.Sc. and M.Sc. degrees in computer engineering from Eastern Mediterranean University, North Cyprus, and the Ph.D. degree in computer science from the University of Southampton, U.K., in 2009. She was a Postdoctoral Researcher with Trinity College Dublin, Ireland, from 2009 to 2014. She is currently a Professor with Cyprus International University, North Cyprus. Her current research interests include artificial intelligence, deep learning, biomedical signal/data analysis, semantic web/web-based systems, search/retrieval models, and computer vision. She is an Associate Editor of IEEE Transactions on Big Data and IEEE Transactions on Artificial Intelligence.

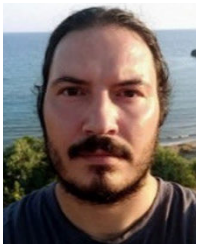

CEM DIREKOGLU received the B.Sc. and M.Sc. degrees in electrical and electronics engineering from Eastern Mediterranean University and the Ph.D. degree in computer vision from the University of Southampton. He was a Postdoctoral Researcher with the Graphics, Vision and Visualization Group, School of Computer Science and Statistics, Trinity College Dublin. From December 2010 to August 2014, he was a Postdoctoral Researcher with the INSIGHT Centre for Data Analytics, Dublin City University. Since September 2014, he has been a full-time Faculty Member with the Electrical and Electronics Engineering Program, Middle East Technical University, Northern Cyprus Campus. His current research interests include computer vision, signal processing, and deep learning. He was a member of the Information Signals, Images and Systems (ISIS) Research Group, School of Electronics and Computer Science.

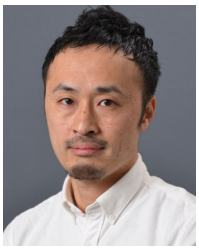

SHOGO OKADA (Member, IEEE) received the Ph.D. degree from Tokyo Institute of Technology, Japan, in 2008. He directs the Social Signal and Interaction Group, Japan Advanced Institute of Science and Technology (JAIST), Japan. He is currently a Professor with JAIST. In 2008 and 2011, he joined Kyoto University, Tokyo Institute of Technology, as an Assistant Professor. He joined IDIAP Research Institute, Switzerland, as a Visiting Faculty Member, in 2014. His research interests include social signal processing, human dynamics, multimodal interaction, and machine learning. He is a member of ACM, JSAI, and IEICE.

MASASHI UNOKI (Member, IEEE) received the M.S. and Ph.D. degrees in information science from Japan Advanced Institute of Science and Technology (JAIST), in 1996 and 1999, respectively. He was a Japan Society for the Promotion of Science (JSPS) Research Fellow, from 1998 to 2001. He was a Visiting Researcher with the ATR Human Information Processing Laboratories, from 1999 to 2000, and a Visiting Research Associate with the Centre for the Neural Basis of Hearing (CNBH), Department of Physiology, University of Cambridge, from 2000 to 2001. He has been a Faculty Member with the School of Information Science, JAIST, since 2001, where he is currently a Full Professor and the Dean of the School of Information Science. His current research interests include auditory-motivated signal processing and the modeling of auditory systems. He is an IEICE Fellow. He is an Associate Editor of *Applied Acoustics*.