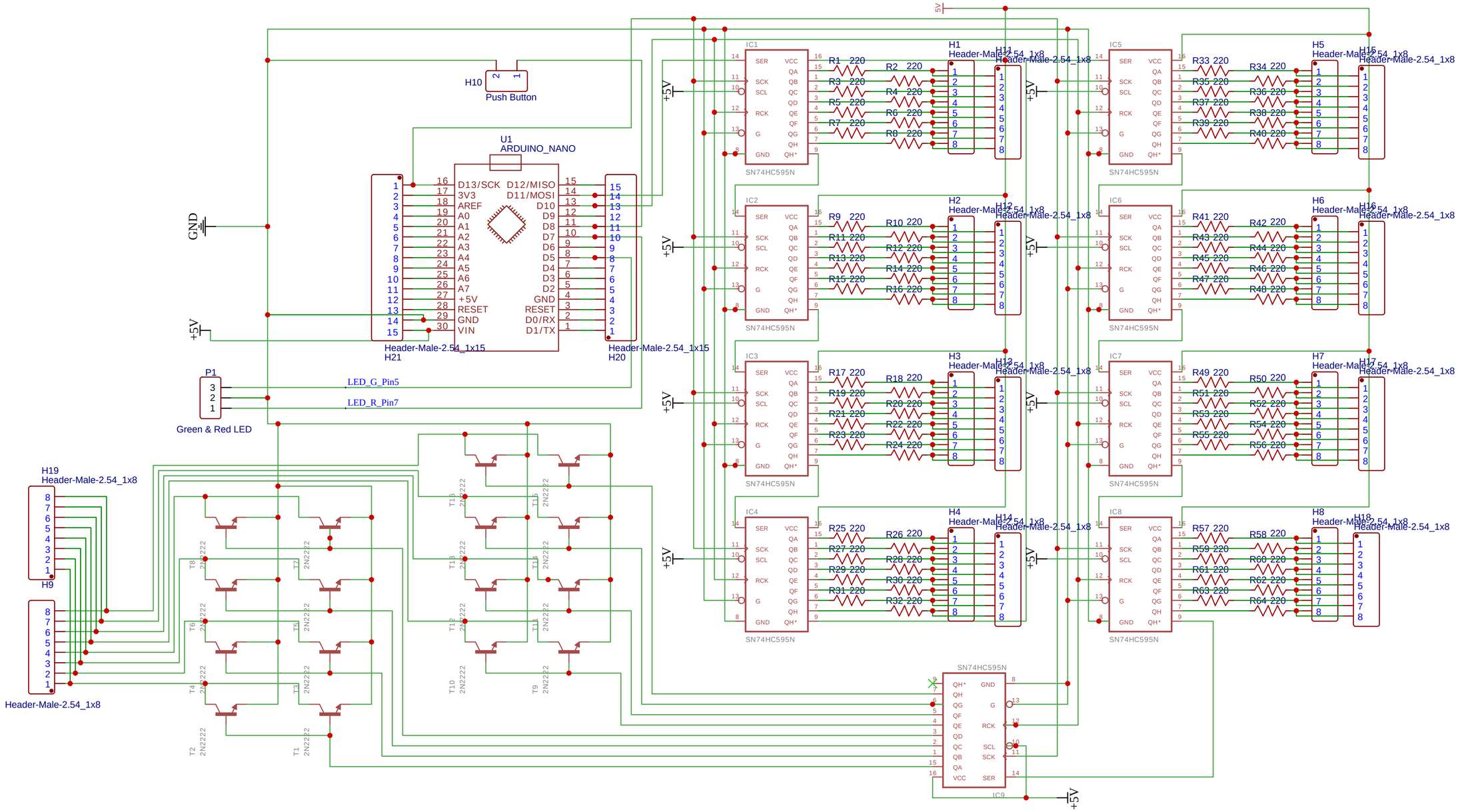

TITLE: LED_Cube_8x8x8_Arduino_Nano	REV: 1.0
Company: @emtronics.official	Sheet: 1/1
Date: 2019-07-24 Drawn By: sagakusumawijaya	