Privacy Preservation from Local & API LLM Ensembles:

PAPILLON

(NAACL 2025 Paper)

Team 1 Project Proposal

CS575 2026: AI Ethics

20254172 Sangeun Kim
20254529 Sunghyun Chang
20254545 Mingyu Jun
20254017 Do Minh Duc

26.03.29.

KAIST

Contents

Part 1. Problem & Related Works

Part 2. Replication Approach

Part 3. Improvement

Part 4. Data & Plan

Part 1: Problem & Related Works

KAIST

Problem (1/2): Privacy Leakage at Inference Time

User Query including Personal Infos

Please write a job application email. My name is Samuel Lee[NAME], applying to Google DeepMind[ORG] in London[LOCATION]. I graduated from KAIST[ORG] in 2022[DATE] with a degree in Computer Science[FIELD]. My current employer is Kakao Crop[ORG]...

Internet-based LLM can infer:

- Full name
- Employer
- Location
- Career timeline
- … etc

- **Raw PII (Personally Identifiable Information)** is transmitted to the internet-based LLM's server at **inference time**.
- When sent to the server, this information may be **retained** or **exposed** without the user intending it.

Problem (2/2): Preserving Privacy Hurts Response Quality

Approach A. Simple Redaction

- Removes critical **context** needed for **personalization**
- The resulting prompt becomes under-specified, leading to **generic or incomplete outputs**

Please write a job application email. My name is [REDACTED], applying to [REDACTED] in [REDACTED]. I graduated from [REDACTED] in [REDACTED] ...

User Query with Redaction

Approach B. Local-LLM Only

- Smaller local models often **underperform** on complex generation tasks
- Achieving full high-quality local generation often requires more HW resource

LLaMA by Meta

MISTRAL AI_

Open Large Language Models (LLaMA, Mistral)

The Core Trade-off: Privacy vs. Quality

🔒

Protect Privacy

- Redact PII before sending to API
- Rely on local models to avoid sending sensitive data externally

VS

✨

Retain Quality

- Send full query to powerful API model
- Personalized, context-aware responses

💡

PAPILLON frames this as a **delegation problem**:

Can local and API models work together at inference time to preserve privacy without sacrificing quality?

Related Works: Protection Methods

Research Direction	Representative Work	Limitation
Training Memorization	*"Extracting Training Data from Large Language Models"* Carlini et al. 2021 (USENIX Security) *"ProPILE: Probing Privacy Leakage in LLMs"* Kim et al. 2024 (NeurIPS)	**Focuses on memorized training data, not user-provided inference-time PII**
Differential Privacy	*"PrivacyAsst: Safeguarding User Privacy in Tool-Using LLM Agents"* Zhang et al. 2024 (IEEE) *"DP-OPT: Make LLM Your Privacy-Preserving Prompt Engineer"* Hong et al. 2023	**Attacker-centric; no proactive user-side prevention**

Related Works: Sanitization and Evaluation

Research Direction	Representative Work	Limitation
Text Sanitization	*"Beyond Memorization: Violating Privacy via Inference with LLMs"* Staab et al. 2023	**Can degrade utility or require model internals which is unavailable in black-box API LLMs**
Privacy Benchmarks	*"Trust No Bot: Discovering Personal Disclosures in Human-LLM Conversations"* Mireshghallah et al. 2024	**Benchmarks do not fully reflect natural user prompts**

Unlike prior work, **PAPILLON** targets inference-time privacy protection with **no extra training**, **user-side protection**, and **black-box compatibility**.

Part 2: Replication Approach

Paper: PAPPILLON

Why we choose this paper

- **First to formalize the task**
  - **Define** Privacy-Conscious Delegation with measurable **metrics** **(QUAL / LEAK)**

- **Results are promising, but incomplete**
  - **QUAL** 85.5% means **14.5% quality gap**
  - **LEAK 7.5%** means PII still gets through

- **Three concrete, fixable gaps**
  - **Inefficient Overhead** for Safe Data
  - Unstable Utility **Tradeoff**
  - Unreliable **Evaluation**

  → Addressed in ***Part 3***

Paper: PAPPILLON

Overview

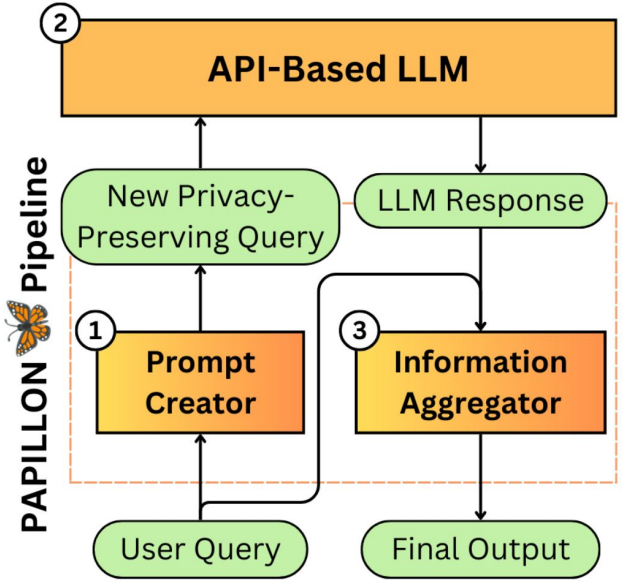

- **Problem:** Raw user queries sent to cloud LLMs expose PII to untrusted providers at inference time
- **Solution:** Local–remote LLM ensemble — sanitize query locally → process in cloud → reconstruct answer locally
- **Key result: QUAL** 85.5% (response quality) / **LEAK** 7.5% (PII leakage rate — promising, but **14.5% quality** gap shows ***room to improve***)

Paper: PAPPILLON

Privacy-Conscious Delegation

Goal: Delegate tasks to powerful cloud LLM while preventing PII exposure

① **Prompt Creator** (M_LOCAL): rewrites query into proxy S — ***free-form, no fixed structure***

② **M_REMOTE:** Processes S → returns high-quality response — never sees raw PII

③ **Information Aggregator (M_LOCAL):** Reconstructs final answer using response + original context

Every query goes through ①, ③ — regardless of whether PII exists

PUPA Benchmark

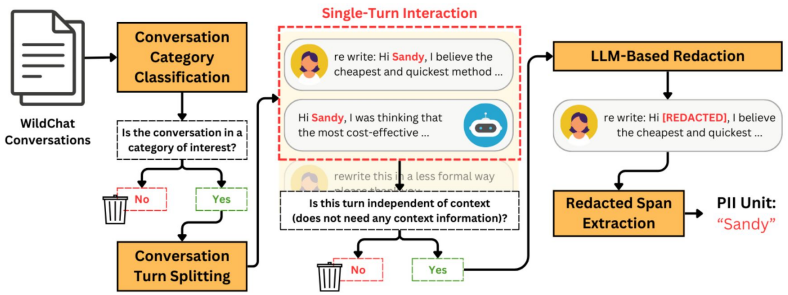

- **901 real user–LLM turns** from WildChat, manually annotated with PII spans
  - **PUPA-TNB** (237): name / topic / background PII
  - **PUPA-WBC** (664): writing, brainstorming, coding tasks
- **LEAK metric**: fraction of PII in proxy S — **objective**
- **QUAL metric**: LLM judge compares two responses — ***subjective, no ground truth***

Paper: PAPPILLON

Code Replication

Platform Solutions Resources Open Source Enterprise Pricing

Columbia-NLP-Lab / PAPILLON Public

Code Issues Pull requests Actions Projects Security Insights

main 4 Branches 0 Tags Go to file Code

siyan-sylvia-li Merge pull request #4 from arnavsinghvi11/patch_tutorial_rendering 594e7eb · 10 months ago 54 Commits

figs	Initial code release	2 years ago
papillon	Unify PAPILLON naming, debugging & updating eval script	2 years ago
papillon_ui	Update README.md	2 years ago
pupa	Renaming README	2 years ago
.gitignore	Unify PAPILLON naming, debugging & updating eval script	2 years ago
LICENSE	Create LICENSE	2 years ago
README.md	Update README.md	2 years ago
environment.yml	Update environment.yml	2 years ago
papillon_tutorial.ipynb	patch the tutorial rendering on GitHub	10 months ago

Getting Started

Installation

Running PAPILLON Interactively

This script should display a terminal prompt that allows you to type in your user queries manually, and then print out the corresponding PAPILLON-synthesized privacy-preserving prompt and final PAPILLON responses.

```
cd papillon

python3 run_papillon_interactive.py --port <PORT_NUMBER> --model_name <MODEL_NAME>
```

Pipeline Optimization

You may use PUPA data or your new data, formatted according to the PUPA format (see `pupa`), to optimize PAPILLON pipelines with different local and API-based model ensembles.

```
cd papillon

python3 run_dspy_optimization_llama.py --port <PORT_NUMBER> --prompt_output "output.json" --data_file
```

Part 3: Improvement

Improvement

Limitations of Existing Work (PAPILLON)

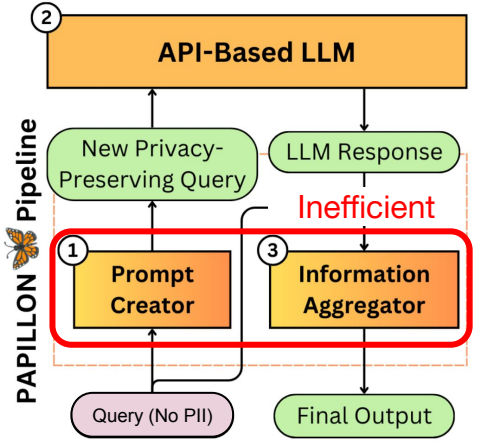

Inefficient Overhead for Safe Data

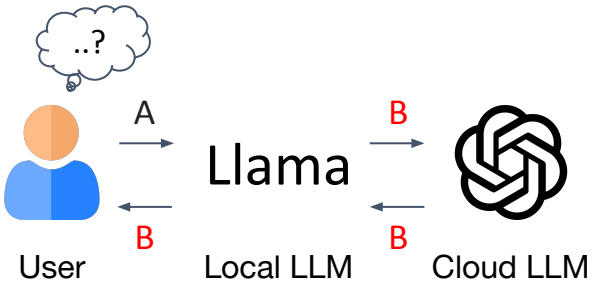

Unstable Privacy-Utility Tradeoff

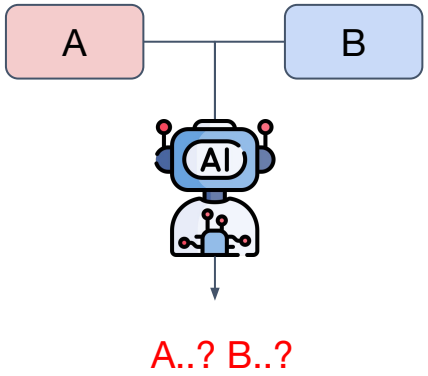

Unreliability of 'LLM-as-a-Judge'

Improvement

Proposed Improvements

- **Hierarchical Privacy Filtering via Lightweight NER**
  - Bypasses local LLM for PII-free query to minimize latency and ensure 100% utility.
- **Structured Delegation with Fixed Schema**
  - Uses fixed template (Task, Context, Style) instead of free-form rewriting.
- **Multi-Dimensional Evaluation Metrics**
  - Complements subjective LLM judging with objective scores like Exposed Token Count, Entity Retention Rate.

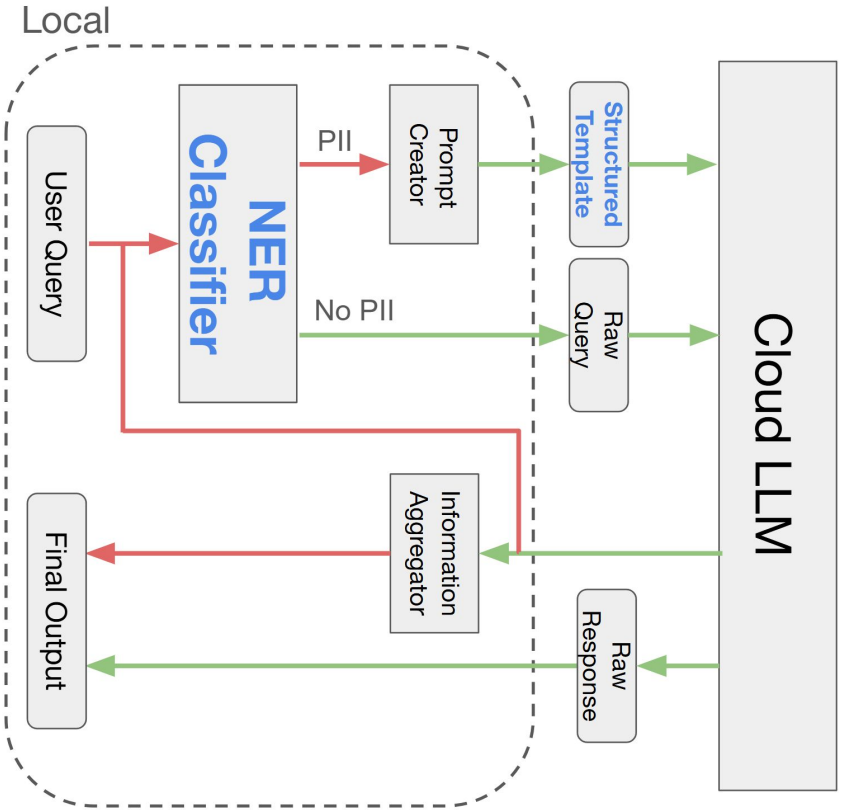

Part 4: Data & Plan

KAIST

Dataset

1. PUPA (from PAPILLON paper)

PUPA-TNB (237 turns): used for evaluation - not touched during optimization

PUPA-New (664 turns): used for DSPy prompt optimization

- Source: WildChat corpus, categories: Job/Visa, Financial Info, Quoted Emails

2. No-PII Data (new addition)

- Source: **WildChat corpus** (same source as PUPA, used in [1])
- Select conversation turns that were classified as containing no PII during the original WildChat annotation process

[1]: Mireshghallah, Niloofar, et al. "Trust no bot: Discovering personal disclosures in human-llm conversations in the wild."

Plan

Person in Charge	Objective	W1	W2	W3	W4	W5	W6	W7	W8	W9
All	Setup environment (DSPy, APIs) · Read codebase · Divide tasks									
Sunghyun	Survey related work · Draft intro & problem statement section									
Sangeun, Duc	Reproduce PAPILLON baseline on PUPA-TNB · Verify QUAL/LEAK scores									
Duc	Collect No-PII data from WildChat · Filter & verify turns									
Mingyu	Implement NER-based router (spaCy/GLiNER) · Define routing logic									
Mingyu	Structured Delegation template (Task / Context / Style)									
Sangeun	Multi-dim. metrics: Exposed Token Count, Entity Retention Rate									
Sangeun, Duc	Full evaluation: baseline vs. improved pipeline on PUPA-TNB + No-PII									
All	Ablation study · Error analysis · Finalize results tables									
Sunghyun	Lead final report writing · Coordinate presentation slides									

Sangeun Sunghyun Mingyu Duc All

Thank you

KAIST