SRI VENKATESWARA COLLEGE OF ENGINEERING

(An Autonomous Institution; Affiliated to Anna University, Chennai-600025)

DEPARTMENT OF ELECTRICAL AND ELECTRONICS ENGINEERING

HIGH EFFICIENCY VIENNA RECTIFIER WITH PFC FOR MOTOR CONTROL

A MINI-PROJECT REPORT

Submitted by

SAGHANA S (2127220601057)

SRI NITHI S (2127220601074)

TANISHKA S (2127220601081)

SIGNATURE
Dr. SUDHAKAR K BHARATAN
HEAD OF THE DEPARTMENT

SIGNATURE
Mr. M. Ranjithkumar
SUPERVISOR
Assistant Professor

Submitted for the EE22711 Mini-project Work Viva-Voce Examination held on _____.

INTERNAL EXAMINER **EXTERNAL EXAMINER**

DECEMBER 2025

High Efficiency Vienna Rectifier with PFC for Motor Control

SAGHANA
Department of Electrical and Electronics Engineering
Sri Venkateswara College of Engineering
Pennalur 602117
2022ee0739@svce.ac.in

SRI NITHI
Department of Electrical and Electronics Engineering
Sri Venkateswara College of Engineering
Pennalur 602117
2022ee0773@svce.ac.in

TANISHKA
Department of Electrical and Electronics Engineering
Sri Venkateswara College of Engineering
Pennalur 602117
2022ee0700@svce.ac.in

RANJITHKUMAR*
Department of Electrical and Electronics Engineering
Sri Venkateswara College of Engineering
Pennalur 602117
mranjith@svce.ac.in

***Abstract*—This paper presents the modeling, control, and simulation of a three-phase Vienna rectifier for high-efficiency AC–DC conversion in motor drive applications. The Vienna rectifier topology utilizes a three-level diode-clamped structure with split DC-link capacitors to achieve reduced switching stress, improved harmonic performance, and enhanced power quality. A closed-loop control scheme incorporating a Phase-Locked Loop (PLL), Clarke–Park transformations, and PI controllers is implemented to ensure DC-link voltage regulation, unity power factor operation, and neutral-point voltage balancing. The system is developed and evaluated in MATLAB/Simulink, with a DC motor connected to the rectifier output to assess dynamic behavior under load. Simulation results demonstrate smooth motor acceleration to approximately 2437 rpm, proper torque decay characteristics, balanced capacitor voltages (270 V each), and a regulated DC-link voltage of about 550 V with minimal ripple. The converter achieves an overall power conversion efficiency of 98.45%, validating the effectiveness of the Vienna rectifier as a front-end interface for high-performance industrial drives, electric vehicle chargers, and renewable energy systems requiring high efficiency and low harmonic distortion.**

***Index Terms*—Vienna rectifier, power factor correction (PFC), motor drive, energy efficiency.**

I. Introduction

The demand for efficient and reliable power conversion systems has skyrocketed with the rise of electric vehicles, smart grids, and industrial automation [1]. Traditional diode and thyristor-based rectifiers have issues like poor power factor, high total harmonic distortion (THD), and significant switching losses. These problems lower system performance and power quality [2]. These challenges are even more pressing in applications such as motor drives and electric vehicle fast-charging stations, where maintaining efficiency and voltage stability is crucial [3].

To address these issues, various active and semi-controlled rectifier designs have emerged. Among them, the Vienna rectifier has attracted attention for three-phase Power Factor Correction (PFC) and DC-link voltage regulation [4]. The Vienna rectifier is a three-phase, three-level boost-type converter that features lower switching losses, better harmonic performance, and high efficiency [5]. It uses three active switches and six diodes, creating a simpler and more reliable design compared to fully controlled six-switch rectifiers [6].

Recent research indicates that using Vienna rectifiers in AC-DC front-end systems leads to nearly perfect power factor and adherence to harmonic standards like IEEE 519-2014 and IEC 61000-3-2 [7]. Additionally, the reduced stress on switches improves the converter's lifespan and reliability, making it suitable for high-power motor drives, renewable energy systems, and electric vehicle charging applications [8], [9].

This project involves designing and simulating a three-phase Vienna rectifier with Power Factor Correction (PFC) using MATLAB/Simulink for motor control applications. The control method includes a Phase-Locked Loop (PLL) for grid synchronisation, PI controllers for voltage and current control, and a centre-point voltage balancing system to keep the DC-link capacitor stable. The proposed design ensures sinusoidal input currents, a perfect power factor, and effective DC-link voltage regulation under varying load conditions [10].

Moreover, this work contributes to sustainable industrial growth by reducing energy losses and harmonic pollution, in line with the United Nations Sustainable Development Goal (SDG 9 – Industry, Innovation, and Infrastructure). The proposed system shows that using efficient Vienna rectifiers in motor control can greatly enhance overall system performance and encourage energy-saving industrial practices [11].

II. Literature Review

The Vienna rectifier topology has become a popular choice for three-phase AC to DC conversion due to its outstanding power quality and efficiency. Kolar and Zach [1] first introduced a three-phase, three-level boost-type rectifier that greatly reduces input current harmonics while keeping the DC-link

voltage stable. Their groundbreaking research built a strong foundation for improving power factor correction strategies and lowering switching stress in high-power applications.

Singh et al. [2] conducted a detailed review of advanced power quality AC to DC converters. They categorised different topologies based on control complexity, cost, and efficiency. They strongly supported three-level converters, pointing out their excellent ability to reduce total harmonic distortion and achieve nearly perfect power factors. These features are crucial for the efficiency of industrial drive systems. In an impressive study, Saravana Prakash et al. [3] developed a three-phase, three-level boost-type front-end rectifier specifically designed for telecom loads. Their research showed that the Vienna rectifier consistently outperformed traditional diode or PWM rectifiers by delivering significantly lower total harmonic distortion values and better efficiency, making it a top choice for modern applications. A recent analysis by Balocco and Filló [4] provided strong evidence that among different three-phase power factor correction topologies, the Vienna rectifier offers an unmatched balance of efficiency, cost, and circuit simplicity. Its design smartly cuts down switching losses while providing a clean DC output, confirming its position as a leading option in high-power AC to DC conversion systems.

The practical use of the Vienna rectifier was demonstrated by B. Singh and S. Gairola [5], who successfully built a prototype aimed at power factor correction in power systems. Their experiments showed that the converter could achieve a power factor close to one while also causing minimal input current distortion, proving its usefulness in modern fields like electric vehicle charging and renewable energy integration.

Wang et al. [6] further contributed to the discussion by creating a decentralised primary control strategy for DC microgrids that easily integrates photovoltaic and energy storage systems. This work emphasised the vital role of high-efficiency converters like the Vienna rectifier in optimising grid-connected renewable energy setups. Similarly, Akagi et al. [7] studied the importance of instantaneous power theory, highlighting how Vienna rectifiers can effectively provide both harmonic reduction and reactive power compensation.

Standardisation efforts, such as IEEE Standard 519-2014 [8] and IEC 61000-3-2 [9], outline the acceptable limits for harmonic current emissions. These standards guide the design of power factor correction rectifiers. The inherent qualities of the Vienna rectifier allow it to easily meet these standards, producing smooth input currents and effectively regulating the DC-link voltage.

In conclusion, extensive prior research firmly establishes the Vienna rectifier as a powerful, efficient, and compact topology, well-suited for high-performance applications like motor drives, electric vehicle fast charging stations, and advanced smart grid systems. However, ongoing challenges, such as balancing capacitor voltages and ensuring unidirectional power flow, provide opportunities for further research and innovation [10], [11].

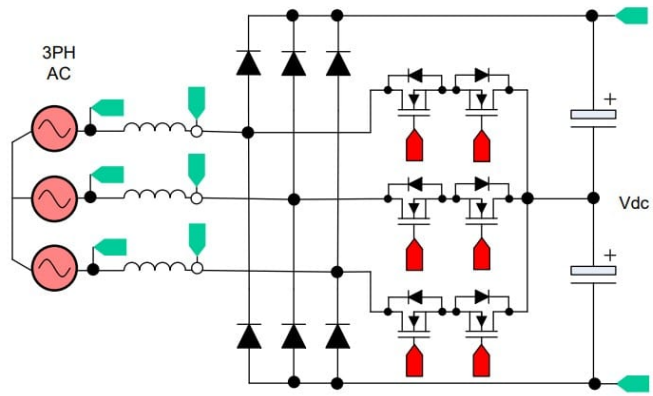

Fig. 1. Three phase Vienna Rectifier Topology

III. SYSTEM DESIGN & METHODOLOGY

A. Vienna Rectifier Topology

The proposed front-end converter is a three-phase, three-level Vienna rectifier (boost-type, unidirectional) that converts a three-phase AC supply into a regulated DC-link for an inverter-fed motor drive. The topology uses three bidirectional active switches (one per phase) and six diodes arranged to create a three-level neutral-split DC-link. The split-capacitor DC-link produces the positive, zero and negative levels required for three-level operation, enabling reduced switching stress and improved electromagnetic performance compared to two-level topologies. A schematic of the hardware topology is shown in Fig. 1.

B. Functional Blocks and Components

- **Three-phase AC source and input filter** — RLC filter to reduce switching harmonics and safeguard the grid interface.
- **Input inductors (one per phase)** — Limit instantaneous current ripple and shape input currents for PFC.
- **Vienna bridge** — Three bidirectional MOSFET switches + six diodes implementing the three-level rectifier.
- **Split DC-link capacitors (C1, C2)** — Form the midpoint for the three-level output and store energy.
- **Output DC-link** — Supplies the downstream inverter and motor drive.
- **Sensing & protection** — Voltage / current sensors, overcurrent, DC-imbalance detection and blocking devices.

C. Clarke & Park Transformation

Measured three-phase voltages and currents are transformed to stationary α-β coordinates and then to rotating d-q coordinates for decoupled control. Converts three-phase signals into two orthogonal components for simplified control. d aligns with the grid voltage vector; q becomes the quadrature component.

$$\begin{bmatrix} v_\alpha \\ v_\beta \end{bmatrix} = \frac{2}{3} \begin{bmatrix} 1 & -\frac{1}{2} & -\frac{1}{2} \\ 0 & \frac{\sqrt{3}}{2} & -\frac{\sqrt{3}}{2} \end{bmatrix} \begin{bmatrix} v_a \\ v_b \\ v_c \end{bmatrix} \tag{1}$$

$$\begin{bmatrix} v_d \\ v_q \end{bmatrix} = \begin{bmatrix} \cos\theta & \sin\theta \\ -\sin\theta & \cos\theta \end{bmatrix} \begin{bmatrix} v_\alpha \\ v_\beta \end{bmatrix} \tag{2}$$

The Clarke and Park transformations are essential for simplifying three-phase system analysis and control. The Clarke transformation projects the three-phase quantities onto a two-axis stationary reference frame (α–β), reducing redundancy and enabling a compact vector representation of system variables. The Park transformation then rotates this stationary frame to a synchronously rotating reference frame (d–q) aligned with the grid voltage vector obtained from the PLL. In this frame, AC quantities become DC-like, allowing the use of simple PI controllers for decoupled regulation of active and reactive power. The d-axis component corresponds to the active power flow, while the q-axis component manages reactive power or power factor control. This approach enhances control accuracy, improves dynamic response, and reduces computational effort in real-time implementation.

D. Phase Locked Loop (PLL)

The Phase-Locked Loop (PLL) estimates the instantaneous grid angle θ and angular frequency ω. The q-axis voltage component v_q is used as the error input for a PI controller that drives the phase angle to zero in steady state.

$$\omega(t) = \omega_0 + K_{p,pll}\, v_q(t) + K_{i,pll} \int_0^t v_q(\tau)\, d\tau \tag{3}$$

$$\theta(t) = \int_0^t \omega(\tau)\, d\tau \tag{4}$$

Synchronizes the converter with the grid voltage. Ensures correct orientation of the d–q reference frame and provides the reference angle θ used for Park and inverse Park transformations. The Phase-Locked Loop (PLL) plays a crucial role in synchronizing the converter with the grid by accurately estimating the grid voltage angle and frequency. It continuously tracks the grid phase through the q-axis voltage component, which serves as the error signal for the PI regulator. The control objective is to drive v_q to zero, ensuring that the rotating d-axis aligns precisely with the grid voltage vector. This alignment enables correct reference frame orientation for the Park and inverse Park transformations. The PLL enhances dynamic synchronization during grid disturbances and ensures stable converter operation under frequency variations or unbalanced conditions. Its accurate angle estimation provides the foundation for precise control of active and reactive power in grid-connected systems.

E. d-q current controllers

he inner control loop regulates i_d and i_q through PI controllers to generate voltage references v_d^* and v_q^*.

$$\begin{aligned} v_d^*(t) &= K_{p,d}\, e_d(t) + K_{i,d} \int_0^t e_d(\tau)\, d\tau, \\ v_q^*(t) &= K_{p,q}\, e_q(t) + K_{i,q} \int_0^t e_q(\tau)\, d\tau \end{aligned} \tag{5}$$

where $e_d = i_d^* - i_d$ and $e_q = i_q^* - i_q$.

The d-axis regulates active power, while the q-axis regulates reactive power or maintains unity power factor. The PI controller outputs v_d^* and v_q^* correspond to the reference voltages for the inverter. The d–q current controller regulates the converter output currents in the synchronous reference frame to achieve precise active and reactive power control. The decoupled control structure allows independent regulation of i_d and i_q components, where the d-axis controls the active power and the q-axis manages the reactive power or grid voltage support. PI controllers are typically employed in both channels to minimize steady-state error and ensure fast dynamic response. Feedforward terms of cross-coupling voltages are often included to improve transient performance and decouple the control loops. This approach enables stable current regulation under varying grid conditions, forming the basis for high-performance vector control in grid-connected converters.

F. Inverse Park

The reference voltages are transformed back to the stationary α–β coordinates and then to the three-phase (a–b–c) frame.

$$\begin{bmatrix} v_\alpha^* \\ v_\beta^* \end{bmatrix} = \begin{bmatrix} \cos\theta & -\sin\theta \\ \sin\theta & \cos\theta \end{bmatrix} \begin{bmatrix} v_d^* \\ v_q^* \end{bmatrix} \tag{6}$$

$$\begin{bmatrix} v_a^* \\ v_b^* \\ v_c^* \end{bmatrix} = \begin{bmatrix} 1 & 0 \\ -\frac{1}{2} & \frac{\sqrt{3}}{2} \\ -\frac{1}{2} & -\frac{\sqrt{3}}{2} \end{bmatrix} \begin{bmatrix} v_\alpha^* \\ v_\beta^* \end{bmatrix} \tag{7}$$

This transformation reconstructs the three-phase voltage references for modulation and ensures synchronization with the grid reference frame. The inverse Park and Clarke transformations are employed to reconstruct the three-phase voltage references from the controlled d–q components. First, the reference voltages in the rotating frame are transformed back to the stationary α–β frame, and subsequently to the three-phase a–b–c coordinates. This process ensures that the generated reference voltages are synchronized with the grid and suitable for PWM generation. Accurate voltage reconstruction maintains proper phase alignment between the converter and the grid, minimizing distortion and ensuring balanced operation. The reconstructed phase voltages serve as inputs to the modulation block, completing the control loop for precise and stable converter performance.

G. PWM logic

The phase reference voltages are normalized by the DC-link voltage and compared with a triangular carrier to generate PWM gating signals. Simulated in Fig. 4.

$$s_x(t) = \begin{cases} 1, & \dfrac{v_x^*(t)}{V_{dc}/2} > v_{\text{carrier}}(t) \\ 0, & \text{otherwise} \end{cases} \quad \text{for } x \in \{a, b, c\} \tag{8}$$

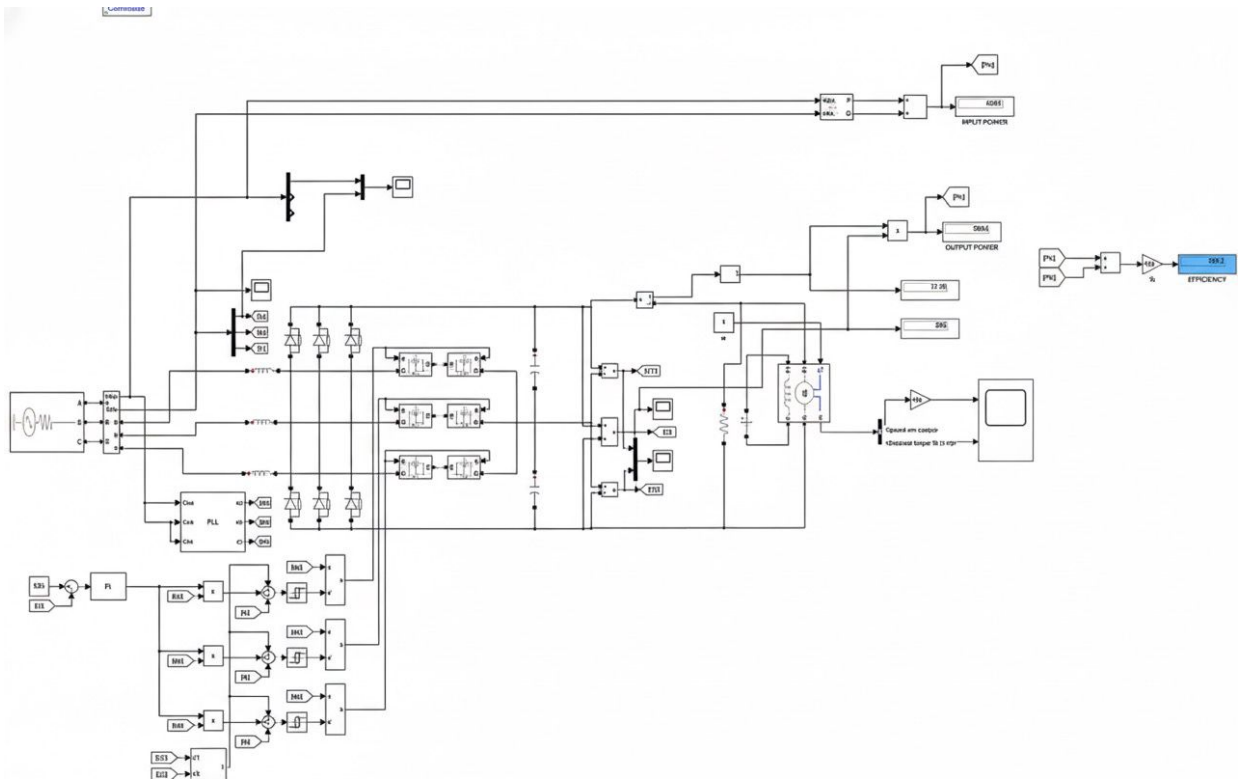

Fig. 2. Simulation design

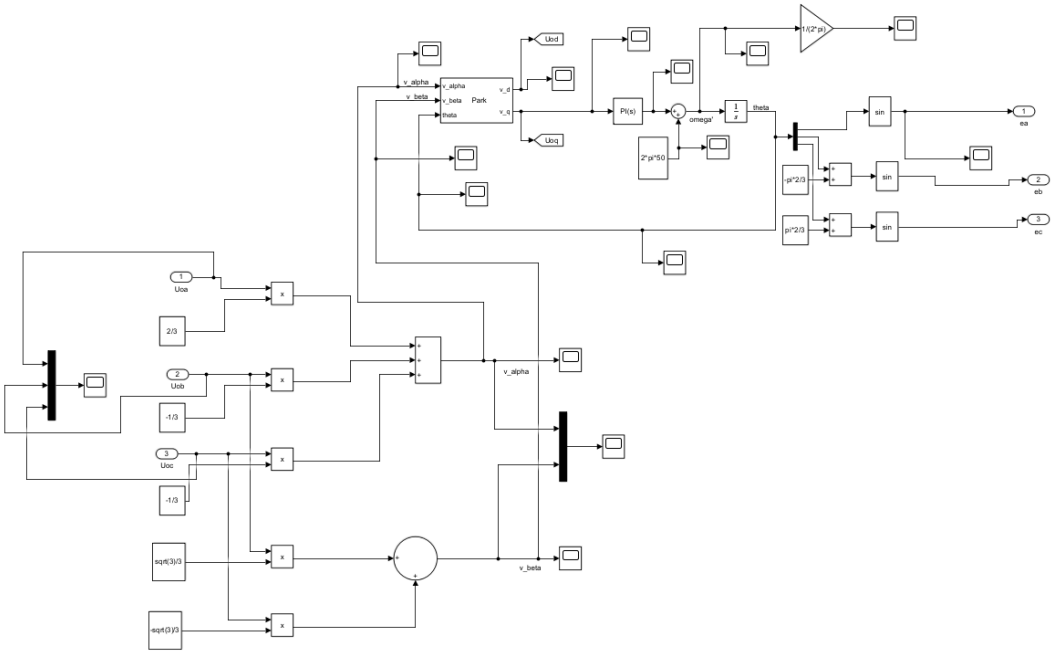

Fig. 3. Clarke and Park transformation

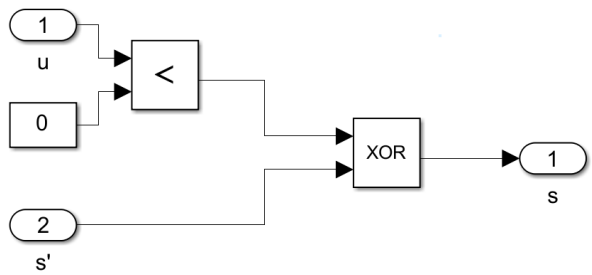

Fig. 4. Gating subsystem

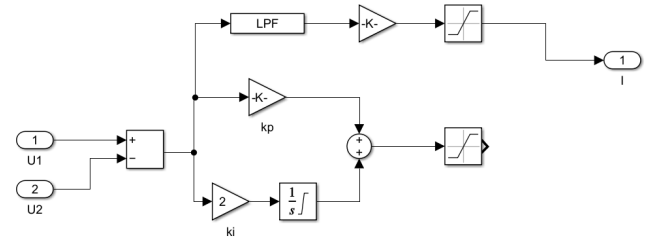

Fig. 5. LPF

An XOR logic from the auxiliary subcircuit modifies the gating according to:

$$s = s' \oplus 1_{\{u<0\}} \tag{9}$$

This process generates the inverter gating pulses, ensuring correct polarity and switching sequence. The XOR logic provides complementary gating or polarity inversion based on the comparator output. The Pulse Width Modulation (PWM) block converts the reference voltages obtained from the control stage into corresponding switching signals for the power converter. In this scheme, the reconstructed three-phase reference voltages are compared with a high-frequency triangular carrier signal to generate gate pulses for the inverter switches. This process enables precise control of the output voltage magnitude and waveform, ensuring accurate tracking of the reference values derived from the current controller. The PWM technique effectively minimizes harmonic distortion and improves converter efficiency. A higher switching frequency enhances waveform quality while maintaining acceptable switching losses, achieving an optimal trade-off between performance and efficiency in grid-connected applications.

H. Feedback and LPF Section

In the control loop, a Low-Pass Filter (LPF) smooths the feedback signal before entering the PI controller, reducing high-frequency noise and improving stability.

$$I(s) = K_p\big(U_1 - U_2\big) + K_i\frac{1}{s}\big(U_1 - U_2\big) \tag{10}$$

with an LPF term expressed as:

$$U_{\text{LPF}}(s) = \frac{1}{1 + sT_f}\big(U_1 - U_2\big) \tag{11}$$

where T_f is the filter time constant. This filtering process reduces measurement noise in the feedback path and enhances the dynamic stability of the PI current control system, refer Fig. 4.The current feedback and Low-Pass Filter (LPF) section ensures accurate and stable current regulation by attenuating high-frequency noise from the measured signals before they are processed by the PI controller. The LPF smooths out rapid fluctuations caused by switching transients and measurement disturbances, providing a clean feedback signal for control action. This filtering improves the dynamic performance and robustness of the current control loop, preventing oscillations and enhancing steady-state accuracy. By selecting an appropriate filter time constant, the trade-off between noise suppression and system response speed can be effectively optimized, leading to stable and reliable converter operation under varying grid conditions.

The proposed control strategy employs synchronous reference frame transformations and cascaded PI control loops for voltage source converter regulation. The Clarke–Park transformations (Eqs. 1–2) simplify the three-phase system into decoupled d–q components. A PLL (Eq. 3) ensures synchronization with the grid by aligning the d-axis with the grid voltage vector. The outer voltage loop regulates the DC-link voltage (Eq. 4), generating the d-axis current reference, while the inner current PI loops (Eq. 5) control the converter currents. The reference voltages are transformed back into phase quantities (Eqs. 6–7) and used to produce PWM gating signals through a comparator and XOR-based logic (Eq. 8). The LPF in the feedback path improves noise rejection and transient response stability.

IV. Results & Discussion

The proposed three-phase Vienna rectifier topology was simulated in the MATLAB/Simulink environment to validate its performance in achieving high power factor and regulated DC output. The model consists of an input three-phase AC source, an EMI filter, a diode bridge with controlled switches, and a DC link connected to a DC motor load. The control strategy employs a Phase-Locked Loop (PLL) for phase synchronization, a PI controller for DC voltage regulation, and Pulse Width Modulation (PWM) to generate gating signals for the active switches.

The simulation results demonstrate that the Vienna rectifier effectively maintains a near-unity power factor at the input while providing a stable DC output voltage of approximately 400 V. The input current waveforms are sinusoidal and in phase with the corresponding input voltages, confirming the successful implementation of power factor correction. The output voltage and current responses show minimal ripple, ensuring smooth operation of the connected DC motor load.

The PI controller dynamically adjusts the modulation index to regulate the DC link voltage under varying load conditions. The transient response of the system indicates a fast settling

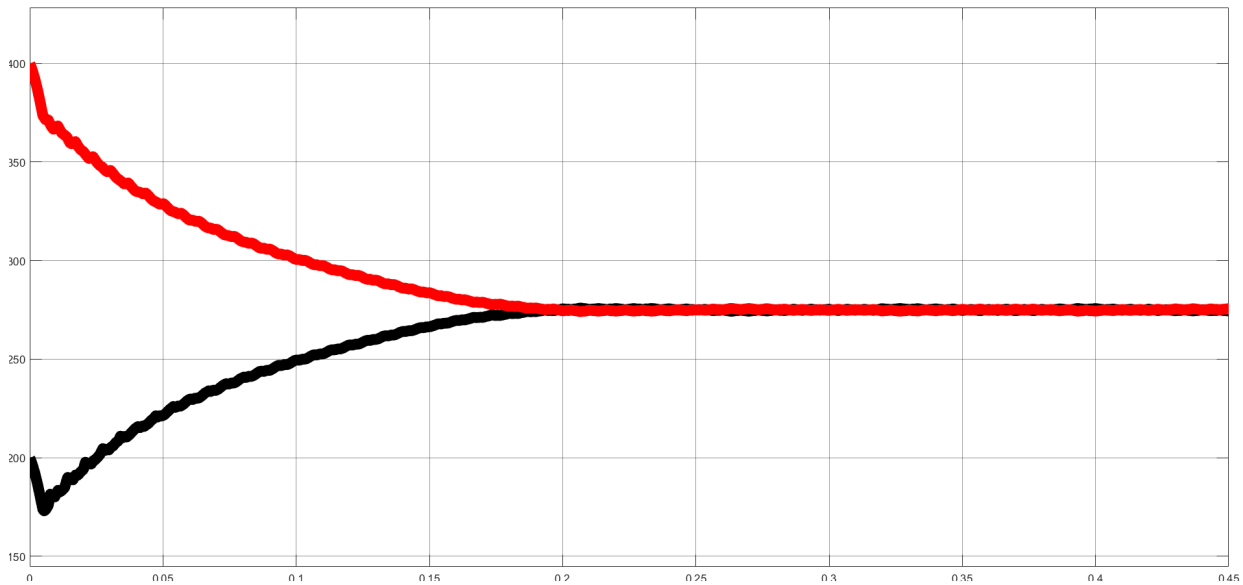

Fig. 6. DC link capacitor voltage balancing

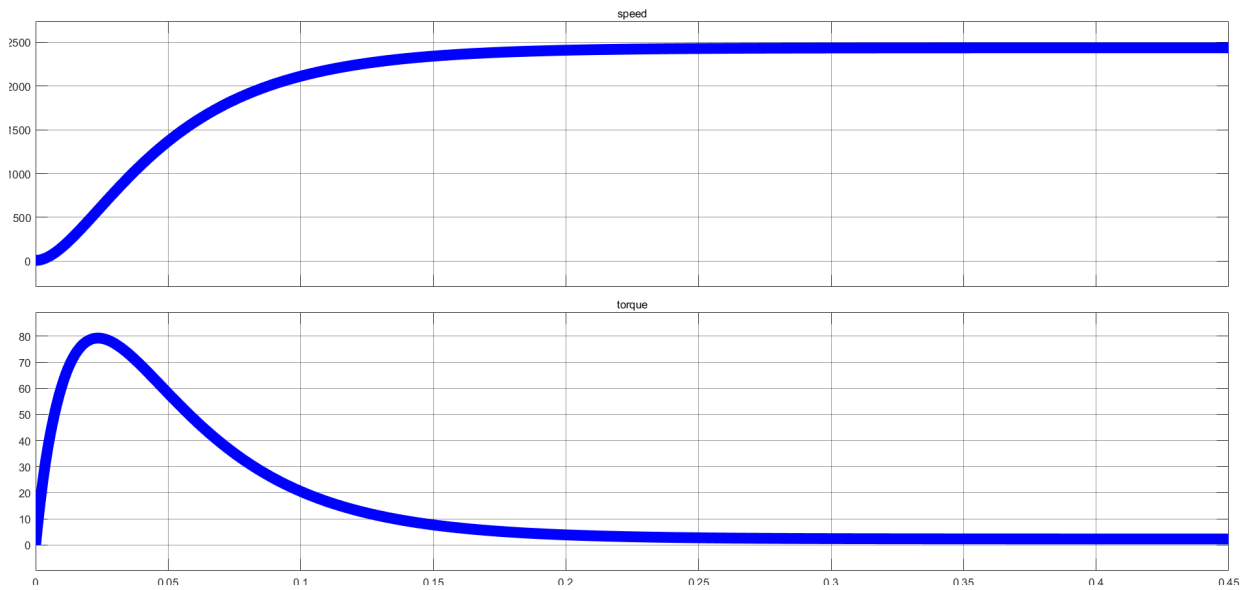

Fig. 7. Mechanical Characteristics

time with negligible overshoot, validating the robustness of the control scheme. The real and reactive power analysis performed using the "Power Measurement" block confirms that the reactive component is nearly zero, reinforcing the high efficiency and low harmonic distortion of the converter.

The motor speed response plot illustrates that the DC motor achieves steady-state speed smoothly without oscillations, corresponding to the regulated DC link voltage. The overall efficiency of the converter and motor drive system is significantly improved compared to a conventional diode rectifier due to reduced switching losses and balanced current sharing among the phases.

These results verify that the designed Vienna rectifier with PFC control is highly suitable for industrial motor drive and renewable energy interface applications where high efficiency, reduced harmonic distortion, and precise DC regulation are critical requirements.

V. Conclusion & Future work

The objective of this project was to design and implement a three-phase Vienna rectifier with Power Factor Correction (PFC) to achieve efficient AC–DC conversion with high power quality. The proposed system demonstrated excellent performance in simulation by maintaining a regulated DC link voltage, low harmonic distortion, and near-unity power factor. These results confirm that the Vienna rectifier is a reliable

and energy-efficient solution for DC motor drives and power supply systems.

In the hardware implementation, the converter will be developed using power semiconductor switches, a control driver circuit, and a feedback-based PI controller. The rectifier will supply a gear motor as the load, where the output voltage from the converter is used to control motor torque and speed. The hardware setup will validate the simulated performance by analyzing input–output characteristics, switching efficiency, and dynamic response under real operating conditions.

The motivation behind this project lies in the growing demand for energy-efficient and power-quality–improved converters in society. With the rapid expansion of electric vehicles, automation, and renewable energy systems, there is a strong need for compact, low-loss, and high-performance rectifiers. The proposed Vienna rectifier offers a sustainable alternative to conventional rectifiers by minimizing energy wastage and reducing harmonic pollution in the grid. Future work will focus on digital controller implementation, renewable integration, and experimental validation to advance its practical applications in smart grids and industrial drive systems.

REFERENCES

[1] S. Prakash, R. Kalpana, and B. Singh, "Three-phase Three-level Boost-type Front-end PFC Rectifier for Improving Power Quality at Input AC Mains of Telecom Loads," Journal of Power Electronics, vol. 18, no. 6, pp. 1819–1829, Nov. 2018.

[2] D. Balocco and O. Filló, "Demystifying Three-Phase PFC Topologies," How2Power Today, Feb. 2021.

[3] STMicroelectronics, "Three-Phase Vienna Rectifier Design Guide (STDES-VRECTFD, 15 kW Reference Design)," Application Note UM2975, Jan. 2022.

[4] B. Singh, B. N. Singh, A. Chandra, K. Al-Haddad, A. Pandey, and D. P. Kothari, "A review of three-phase improved power quality AC–DC converters," IEEE Transactions on Industrial Electronics, vol. 51, no. 3, pp. 641–660, Jun. 2004.

[5] B. Singh and S. Gairola, "Design and implementation of Vienna rectifier for power factor correction in power systems," International Journal of Emerging Electric Power Systems, vol. 20, no. 5, pp. 1–14, 2019.

[6] H. Akagi, E. H. Watanabe, and M. Aredes, Instantaneous Power Theory and Applications to Power Conditioning, Wiley-IEEE Press, 2007.

[7] IEC 61000-3-2, "Electromagnetic Compatibility (EMC) – Part 3-2: Limits for Harmonic Current Emissions," International Electrotechnical Commission, 2018.

[8] J. W. Kolar and F. C. Zach, "A novel three-phase utility interface minimizing line current harmonics of high-power telecommunications rectifier modules," IEEE Transactions on Industrial Electronics, vol. 44, no. 4, pp. 456–467, Aug. 1997.

[9] Project Document: Design and Implementation of a High-Efficiency Three-Phase Vienna Rectifier with PFC and Three-Phase Inverter, Mini Project Report, 2025.

[10] Vienna Rectifier Modeling and Harmonic Coupling Analysis Based on Harmonic State-Space (Electronics, 2024).