Electrical Power Quality and Utilisation, Journal Vol. XI, No. 1, 2005

ANALYSIS OF VIENNA RECTIFIER

Grzegorz RADOMSKI
Technical University of Kielce, Poland

Summary: **It is common to find the inexpensive but robust electric power rectification method to fulfil the demands of clean power conversion [1-12]. The Vienna rectifier structure [1] is one of the hopeful construction to fulfil these demands. It may be classified as the Clean Power Converter. It lets us obtain PFC rectification in simpler than the PWM converter system. The Vienna rectifier has three control points. In addition the Vienna rectifier is the three voltage level system with less current ripples than in the case of the PWM converter. However, it has some disadvantages. The Vienna rectifier system is an unidirectional converter. It can function only in the rectifier mode, the working in the inverter mode is impossible and the generation of the reactive power is strongly restricted. Usually the Vienna rectifier is controlled on the basis of the direct current control method [4,5,6]. However, this method is not perfect because it lets the improper control sequences appears. In this paper the mathematical model of the Vienna rectifier is derived. The voltage space vectors and their dependencies to the phase currents are defined. The range of the phase displacement angle and the maximum voltage space vector module v. phase displacement angle is drawn out for the case of the sinusoidal space vector modulation. The drawn out relations are proven by simulation results.**

Key words:
Power electronics
Electric power quality
PFC rectifiers
Improving THD(i)

1. INTRODUCTION

Limitation of the high harmonic contents in the currents and improvement of the input power factor of the loads supplied by the power electronic converters is one of the most important problems of power electronics. Especially, the ratings of the rectifiers are widely considered [2]. Classic diode and thyristor rectifiers are sources of the high harmonic current components drawn out from the electric power utility ($THD_i \approx 30\%$), while the common norms demand the total harmonic distortion factor $THD_i \leq 5\%$ and power factor $PF \geq 94\%$. The developed Vienna rectifier structure [1] is devoted mainly for supplying of electronic systems. The scheme of Vienna rectifier is presented in the Figure 1.

The main advantages of this construction are: three phase, three level input voltage generation, controlling only three electronic switches, less voltage stress of the electronic switches than in the case of the PWM converter. It is worth underlining that this configuration is death time problem free. However, the Vienna rectifier is unidirectional system. It can convey the electrical energy only from AC circuit to the DC circuit. The methods of controlling Vienna rectifier with direct input current shaping were presented in the papers [4, 5, 6]. The controlling Vienna rectifier by the voltage space vector method and its limitations is the subject of this paper. The Vienna rectifier belongs to the class of AC/DC converters with current source input and voltage source output. The primary sides of input magnetic coils are supplied by phase voltages. The controlling this kind of the converter relies on the generation of three phase voltages at the secondary side of the input magnetic coils. This generation must go in the manner that the voltages at the input magnetic coil impedance have low high harmonic contents, the phase angle and amplitude of the first harmonic voltage oriented to obtain the desired current values near sinusoidal and usually in phase with input phase voltages. The principles of the converter functionality are presented in the fig. 2 and fig. 3.

The fig. 2 presents the equivalent scheme of the input rectifier circuit while the fig. 3 illustrates the relation between the voltage and current space vectors in the dq reference axis. The character of the input impedance and power flow direction in relation to rectifier voltage space vector realisation is shown. It will be next explained that Vienna rectifier may function only in the rectifier mode, the working of Vienna rectifier in the inverter mode is impossible.

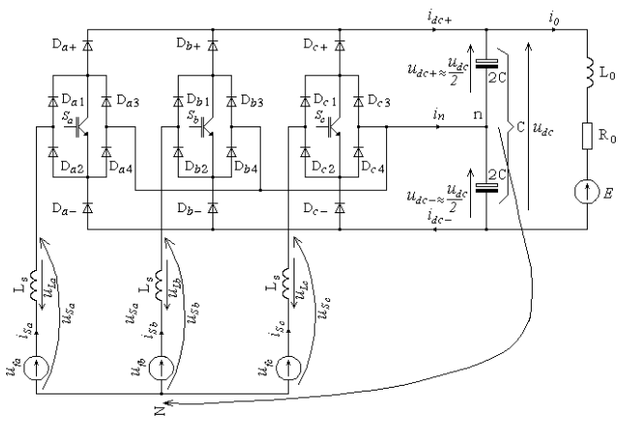

Fig. 1. Scheme of the Vienna rectifier

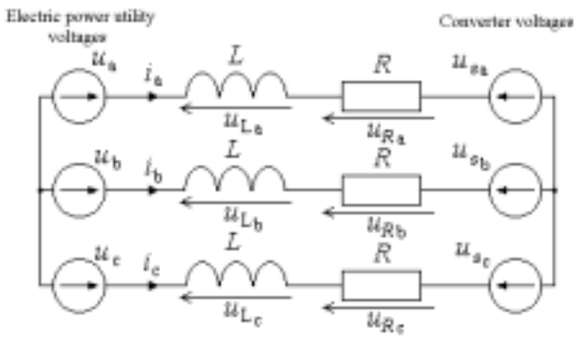

Fig. 2. Equivalent scheme of the rectifier

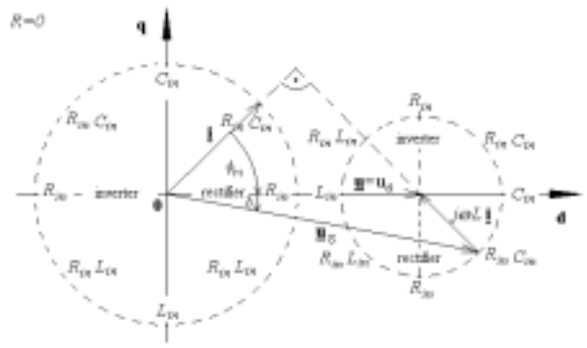

Fig. 3. Rectifier vector diagram

2. INPUT VOLTAGES OF VIENNA RECTIFIER

Vienna rectifier is three level voltage boost converter. It differs from PWM AC/DC boost converter in realisation of matrix of power electronic switches and in three level converter phase voltage related to the mid point of the capacitive output voltage divider [3]. This property is a direct result of the different realisation of the matrix of power electronics switches. The transistor switches together with diode switches and input inductance create the boost converter system. Input magnetic coils are charged in the state when the transistor is on and discharged by the positive or negative diode when the transistor is off. While the transistor electronic switch is on, the current and energy cumulated in induction coil increase, when the switch is off the energy flows from the magnetic coil to the output circuit by diode D_{j+} or D_{k-} depending on the actual current flow direction. Change in the state of transistor conduction automatically cause the change in the diodes conduction which results in death time problem free operation of the rectifier. Depending on the state of power electronic switch and the direction of current the input voltage of the rectifier takes three values:

$$u_{Sin} \in \left\{ \frac{u_{dc}}{2},\ 0,\ -\frac{u_{dc}}{2} \right\} \tag{1}$$

respectively:

$$\text{for} \quad s_i = 0 \wedge i_i \geq 0 \Rightarrow u_{Sin} = \frac{u_{dc}}{2} \tag{2}$$

$$\text{for} \quad s_i = 1 \Rightarrow u_{Sin} = 0 \tag{3}$$

$$\text{for} \quad s_i = 0 \wedge i_i < 0 \Rightarrow u_{Sin} = -\frac{u_{dc}}{2} \tag{4}$$

where phase indexes:

$$i \in \{a,\ b,\ c\}$$

The dynamics of the phase currents is described by the following equations:

$$\text{for } s_i = 1 \qquad \frac{di_i}{dt} = \frac{1}{L_S}\left(u_{fi} + u_{Nn}\right) \tag{5}$$

$$\text{for } s_j = 0 \wedge i_j > 0 \quad \frac{di_j}{dt} = \frac{1}{L_S}\left(u_{fj} + u_{Nn} - \frac{u_{dc}}{2}\right) \tag{6}$$

$$\text{for } s_k = 0 \wedge i_k < 0 \quad \frac{di_k}{dt} = \frac{1}{L_S}\left(u_{fk} + u_{Nn} + \frac{u_{dc}}{2}\right) \tag{7}$$

$$i \neq j \neq k \qquad i, j, k \in \{a, b, c\}$$

The fact that the positive current responds to the switching phase voltage u_{Sin} between values of 0 and $\frac{u_{dc}}{2}$ while the negative current responds to the switching phase voltage between values of u_{Sin} and $-\frac{u_{dc}}{2}$ results in strongly limited abilities of the reactive power generation and in total impossibility of working in the inverter mode. The disadvantages of Vienna rectifier described here are illustrated by the simulation investigation results in figures from 10 to 15 in the next chapter. For these reasons, the Vienna rectifier may be implemented as a power supply for electronic systems, especially in telecommunication switch-boxes, electric arc supply, UPS systems, electric battery chargers. The application of the Vienna rectifier in the field of electric DC drives is restricted to the systems with low dynamics without regenerating braking. Introducing the switch state function s_i where $s_i = 1$ for the conduction mode of switch and $s_i = 0$ in the case of not conduction mode lets us describe values of voltages u_{Sa}, u_{Sb}, u_{Sc} as:

$$u_{Sin} = (1-s_i)\left[sign(i_i)u_{dc+} - (1-sign(i_i))u_{dc-}\right]$$

$$\text{for} \qquad i \in \{a,b,c\} \tag{8}$$

The sign function defined as (9) is used in the considerations presented in this paper.

$$sign(x) = \begin{cases} 1 & dla \quad x \geq 0 \\ 0 & dla \quad x < 0 \end{cases} \tag{9}$$

For $u_{dc+} \approx u_{dc-}$, which is true in the case of large and equal values of the capacitance C_+ and C_-, we can state that $u_{dc+} = u_{dc-} = \frac{u_{dc}}{2}$, then voltages given by equation (8) may be described by the simplified equation (10).

$$u_{Sin} = (1-s_i)\left(2sign(i_i)-1\right)\frac{u_{dc}}{2} \tag{10}$$

Phase voltages referenced to the potential of the neutral point of electric power utility (11) may be obtained as the differences of phase voltages referenced to the neutral point of output voltage capacitive divider and zero sequence component voltage $u_{SO} = u_{Nn}$, see figures 1 and 4.

$$u_{Si} = u_{Sin} - u_{Nn} \tag{11}$$

Taking into account simplification (10) the zero sequence voltage of the rectifier system may be stated in the form (12).

$$\begin{aligned} u_{Nn} = u_{S0} &= \frac{1}{3}\left(u_{San} + u_{Sbn} + u_{Scn}\right) = \\ &= \frac{1}{3}\Big[(1-s_a)\left(2sign(i_a)-1\right) + (1-s_b)\left(2sign(i_b)-1\right) + \\ &\quad + (1-s_c)\left(2sign(i_c)-1\right)\Big]\frac{u_{dc}}{2} \end{aligned} \tag{12}$$

In the end we obtain symmetrical rectifier voltage generator described by equation (13) as a result of electronic switches functionality. The voltages u_{Sa}, u_{Sb}, u_{Sc} obtained have an impulse shape time plots.

$$\begin{cases} u_{Sa} = \left\{2(1-s_a)\left(2sign(i_a)-1\right) - \begin{bmatrix} (1-s_b)\left(2sign(i_b)-1\right) + .. \\ .. + (1-s_c)\left(2sign(i_c)-1\right) \end{bmatrix}\right\}\frac{u_{dc}}{6} \\ u_{Sb} = \left\{2(1-s_b)\left(2sign(i_b)-1\right) - \begin{bmatrix} (1-s_a)\left(2sign(i_a)-1\right) + .. \\ .. + (1-s_c)\left(2sign(i_c)-1\right) \end{bmatrix}\right\}\frac{u_{dc}}{6} \\ u_{Sc} = \left\{2(1-s_c)\left(2sign(i_c)-1\right) - \begin{bmatrix} (1-s_a)\left(2sign(i_a)-1\right) + .. \\ .. + (1-s_b)\left(2sign(i_b)-1\right) \end{bmatrix}\right\}\frac{u_{dc}}{6} \end{cases} \tag{6}$$

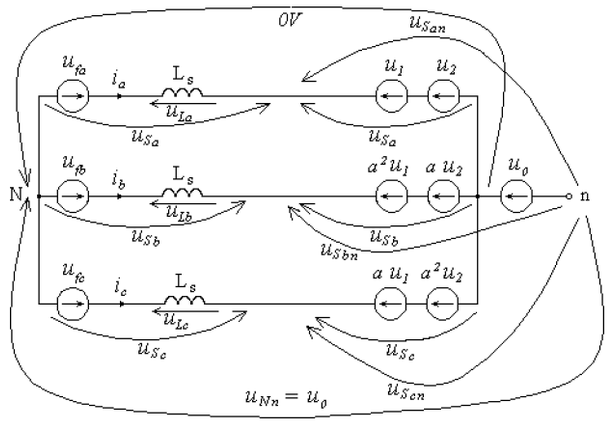

Fig. 4. Scheme for symmetrical components analysis of AC/DC converter

3. BASE VOLTAGE SPACE VECTORS OF VIENNA RECTIFIER

Analysing the equation (13), at the input assumption of rectifier symmetry, you come to the conclusion that there are six zones where current signs have different values (14). The described relation is illustrated in the figure 5. The zone sectors will be enumerated by the digits from 0 to 5.

$$SectI = \begin{cases} 0 \text{ for } sign(i_a)=1,\ sign(i_b)=0,\ sign(i_c)=0 \\ 1 \text{ for } sign(i_a)=1,\ sign(i_b)=1,\ sign(i_c)=0 \\ 2 \text{ for } sign(i_a)=0,\ sign(i_b)=1,\ sign(i_c)=0 \\ 3 \text{ for } sign(i_a)=0,\ sign(i_b)=1,\ sign(i_c)=1 \\ 4 \text{ for } sign(i_a)=0,\ sign(i_b)=0,\ sign(i_c)=1 \\ 5 \text{ for } sign(i_a)=1,\ sign(i_b)=0,\ sign(i_c)=1 \end{cases} \tag{14}$$

In the stationary reference frame with co-ordinations α, β every zone occupies the angle of $\frac{\pi}{3}$ radian. For the given current zone the electronic switches state vector $\mathbf{s} = [s_a, s_b, s_c]$ has eight different values. Each value of power electronic switches state vector has a co-responding voltage space vector. This vector may be generated when current space vector lays in the given zone. The voltage space vectors are defined by transformation the equation set (13) into the stationary reference frame α, β. This transformation is performed by the left-side multiplying of the equation (13) by the conversion matrix $\mathbf{C}_{abc \to \alpha\beta}$. The end points of the six voltage space vectors create a regular hexagon, the end point of two other voltage space vectors point the centre of this hexagon. While the current space vector is moving through the current sectors from 0 to 5, the voltage space vector follows the current through the co-responding hexagons which may be generated for this current zone.

Voltage space vectors with the most module $\left|\underline{V_5}\right| = \sqrt{\frac{2}{3}}u_{dc}$ belong only to one sector, with middle module $\left|\underline{V_{2,6}}\right| = \frac{1}{\sqrt{2}}u_{dc}$

to two one and with small module $\left|\underline{V_{1,3,4,7}}\right| = \frac{1}{\sqrt{6}} u_{dc}$ to three ones. The null space vector $\left|\underline{V_0}\right| = 0 u_{dc}$ is realised by switching on the all three power electronic switches at the same time, independently of the current sector zone. The next convention for assigning voltage space vectors is used in figure 5. The voltage space vector is represented by the four numbers $(SectI; s_a, s_b, s_c) = (SectI; \mathbf{s})$. The first number refers to a current sector zone number for which voltage space vector is generated. This number is the input parameter of voltage space vector modulator. The next three numbers with values 0 or 1 refer to the state of the power electronic switches and are output parameters of modulator algorithm.

4. CONTROL AREA OF VIENNA RECTIFIER

The relative placing of the sectors of the current space vectors and the hexagons of basic voltage space vectors (Fig. 6) cause that in the case of sinusoidal modulation of the voltage $\mathbf{u}_s$ the phase displacement angle between the first harmonic of current and the first harmonic of the AC side rectifier voltage must be restricted to the range expressed by expression (15).

$$-\left(\frac{\pi}{6} + \varepsilon\right) \le \varphi_{s(1)} \le \frac{\pi}{6} + \varepsilon \qquad (15)$$

The angle ε is introduced to express the influence of the high current harmonics on the activation of the actual current sector. In the next expressions the influence of angle ε will be neglected. For the phase displacement angle $\varphi_{s(1)}$ satisfying expression (15) the maximum available module of the voltage space vector (in case of sinusoidal modulation) is restricted by equation (16).

$$max\left|\mathbf{u}_s\right| = \frac{1}{\sqrt{2}\left(cos\,\varphi_{s(1)} + \sqrt{3}\left|sin\,\varphi_{s(1)}\right|\right)} u_{dc} \qquad (16)$$

There also exist a potential problem that may take place in the case of current space vector going across the boundary between two current sectors. This problem arises from the fact that change of sign of any phase current i_i in situation when the transistor of this phase is in off state ($s_i = 0$) cause the co-responding change in the sign of AC side phase voltage, which is equivalent to the change of the actual voltage space vector. In this case, we must make appropriate changes in power electronic switch state vector to save the actual value of the voltage space vector. This problem will induct some secondary problems in controlling Vienna rectifier. The change of current sign ($sign(i_j)$) in the phase with conducting transistor ($s_j = 1$) does not cause any change in the voltage space vector value. In this case no additional action is needed. To sum up, we can say that there will be no pro-

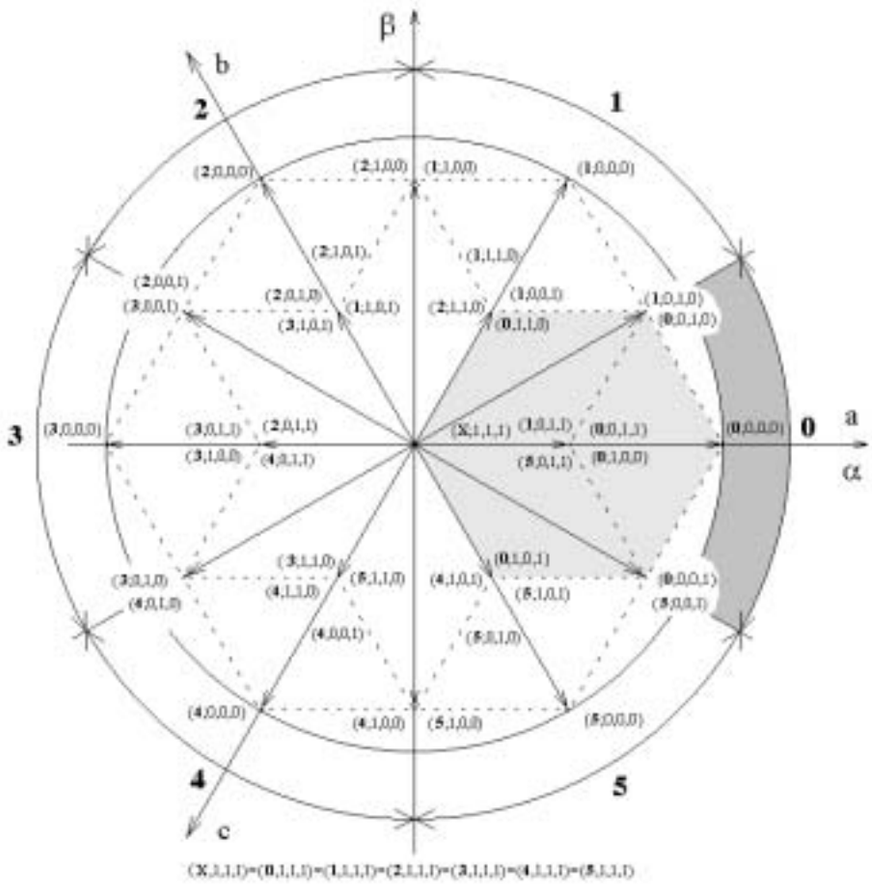

Fig. 5. Voltage base space vectors of Vienna rectifier

blems if the voltage space vector belongs to the common part of two hexagons and has the same electronic switch state vector in both sectors. In the other cases the actual voltage space vector has no realisation in the next current sector or the procedure recalculating the power electronic state vector for generating actual voltage space vector in the new hexagon must be performed. For the voltage space vectors enumerated like in fig. 6, while current space vector goes to the next current sector, only vectors $\underline{V}_{3,4}$, $\underline{V}_6$, $\underline{V}_7$ may be realised in the new current sector. In the case of vectors $\underline{V}_6$, $\underline{V}_7$ and vector $\underline{V}_{3,4}$ realisation with two transistors switched on no additional action is needed (Fig. 5). In the case of vector $\underline{V}_{3,4}$ realisation with one transistor switched on the recalculation procedure must be performed.

5. DC SIDE OUTPUT CIRCUITS OF VIENNA RECTIFIER

The three level AC side voltage u_{Sin} synthesis has an influence on the rectifier DC side output circuit structure. Figure 7 presents equivalent scheme of the Vienna rectifier output circuits.

Two of the three currents i_{dc+}, i_{dc-}, i_n are independent and may be represented in the DC output circuits by the current sources controlled by the state of power electronic switches. The third current is a compliment of the two others. The choice of the currents represented by the current sources is arbitrary. Equations (17), (18), (19) describe currents that supply the rectifier DC output circuits.

$$i_n = s_a i_a + s_b i_b + s_c i_c \tag{17}$$

$$i_{dc+} = (1-s_a)\,sign(i_a)\,i_a + (1-s_b)\,sign(i_b)\,i_b + \\ + (1-s_c)\,sign(i_c)\,i_c \tag{18}$$

$$i_{dc-} = -\Big((1-s_a)(1-sign(i_a))i_a + \\ + (1-s_b)(1-sign(i_b))i_b + (1-s_c)(1-sign(i_c))i_c\Big) \tag{19}$$

In the case of sinusoidal modulation the average values of the i_{dc+} and i_{dc-} currents are equal to each other and equal to the average value of the load current i_0 (20). It implicates that the average value of the i_n current is zero. Hence average values of the condenser voltages are equal to each other. In the case of great values of the condenser capacities it may be assumed that the instantaneous values of the condenser voltages are nearly constant and equal to each other. In this case the simplification (10) may be applied.

$$I_{dc+(Avg)} = I_{dc-(Avg)} = I_{0(Avg)} \qquad I_{n(Avg)} = 0 \tag{20}$$

The dynamic of the voltage of the output capacitors is described by equations from (21) to (28).

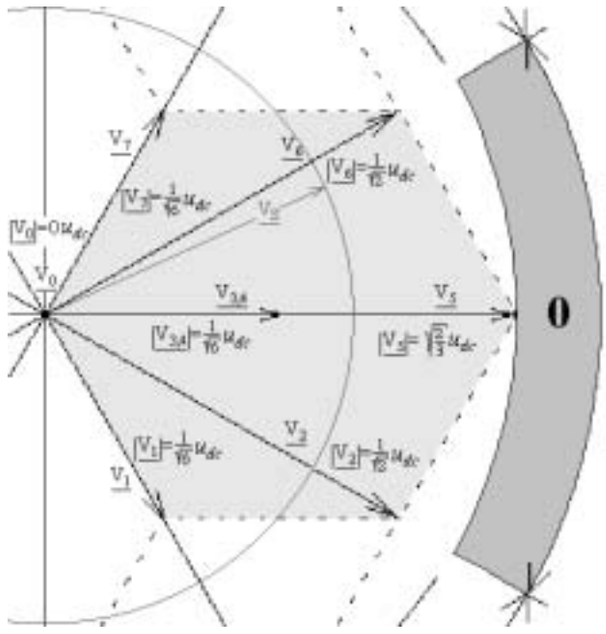

Fig. 6. Hexagon of the voltage space vectors generated for one current sector

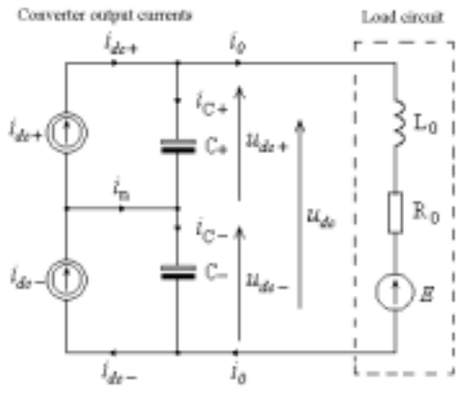

Fig. 7. Equivalent scheme of the output circuits of Vienna rectifier

$$i_{C+} = i_{dc+} - i_0 \quad (21) \qquad i_{C-} = i_{dc-} - i_0 \quad (22)$$

$$i_n = i_{dc-} - i_{dc+} \quad (23) \qquad i_n = i_{C-} - i_{C+} \quad (24)$$

$$i_{C+} = C_+ \frac{du_{dc+}}{dt} \quad (25) \qquad i_{C-} = C_- \frac{du_{dc-}}{dt} \quad (26)$$

$$\frac{du_{dc+}}{dt} = \frac{1}{C_+}\left(i_{dc+} - i_0\right) \quad (27) \qquad \frac{du_{dc-}}{dt} = \frac{1}{C_-}\left(i_{dc-} - i_0\right) \quad (28)$$

The rectifier DC output voltage is a sum of the output circuits capacitor voltages (29).

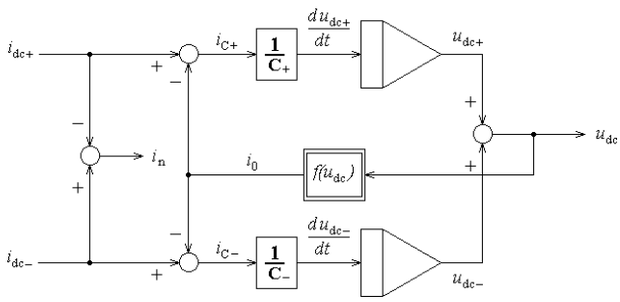

Fig. 8. Vienna rectifier's DC output circuits block scheme

$$u_{dc} = u_{dc+} + u_{dc-} \tag{29}$$

Generally the rectifier DC output current is a non-linear function of the rectifier DC output voltage (30). The parameters of the load circuit R_0, L_0, E are the parameters of the function (30).

$$i_0 = f\left(u_{dc}\right) \tag{30}$$

The block scheme in figure 8 is a graphical representation of the above mathematical equations describing the Vienna rectifier DC output functionality.

6. RESULTS OF SIMULATION INVESTIGATION OF VIENNA RECTIFIER

Vienna rectifier simulation scheme for the TCAD program is presented in the fig. 9. Simulation was performed for the next conditions: $U_f = 230\text{V}, f = 50\text{Hz}, L_s = 85\text{mH}, R_s = 0.5\Omega$, $S = 3\text{kVA}$, $C_+ = C_- = 1100\mu\text{F}$, $R_0 = 423\Omega$, $L_0 = 0\text{H}$, $E = 0\text{V}$, $f_{\text{PWM}} = 10\text{kHz}$.

The time plots of the phase currents, the phase voltage and the output regulator signal for different values of phase displacement angle are presented in the figures from 10 to 15. The voltage U_a is multiplied by scale factor of 0,03.

It can be see from the previous illustrations of the simulations that Vienna rectifier functions properly for the values of the phase displacement angle $\varphi_{s(1)}$ from the closely restricted range. For the AC side rectifier input (behind the input magnetic coil) this range is done by equation (15). The phase displacement angle $\varphi_{(1)}$ in the case of the input voltage of the overall converter (before the magnetic coil) differs from the value of the angle $\varphi_{s(1)}$ because of the reactive power of input magnetic coil. For this reason, the rectifier displacement angle $\varphi_{(1)}$ may have larger value than $\frac{\pi}{6}$. It must have larger value than $-\frac{\pi}{6}$ on the other hand. In the opposite case the current shape will be distorted from sinusoidal.

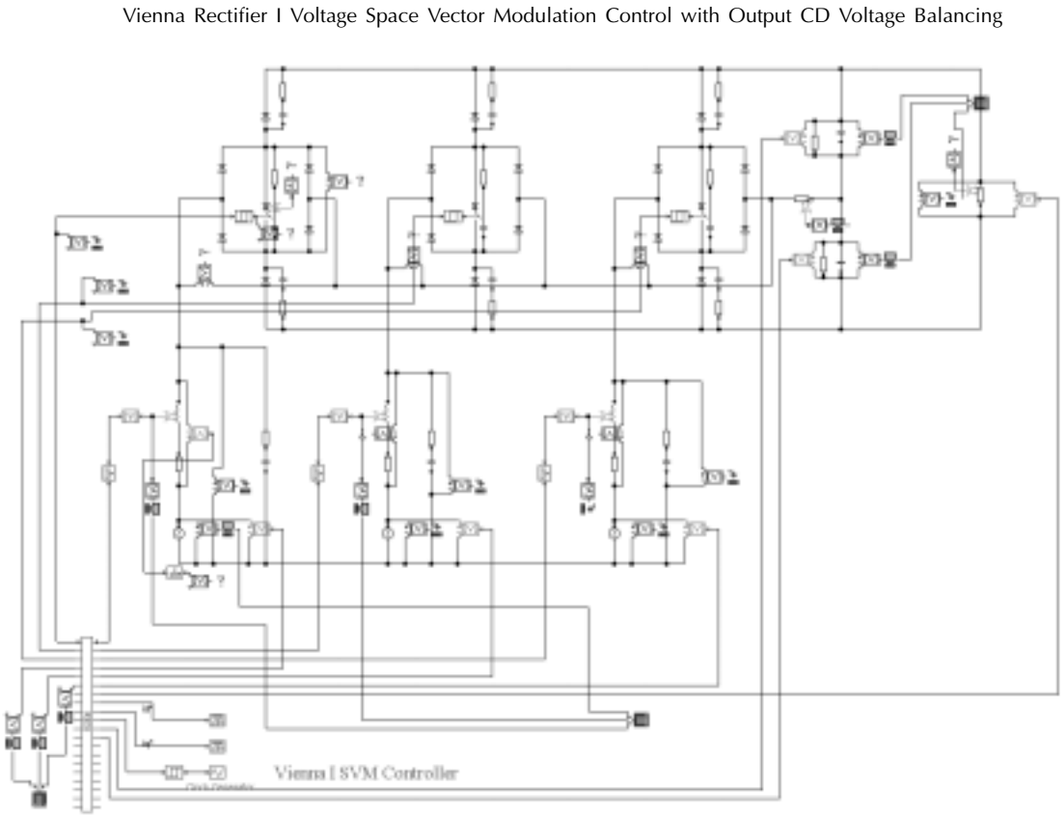

Fig. 9. Simulation scheme of Vienna rectifier

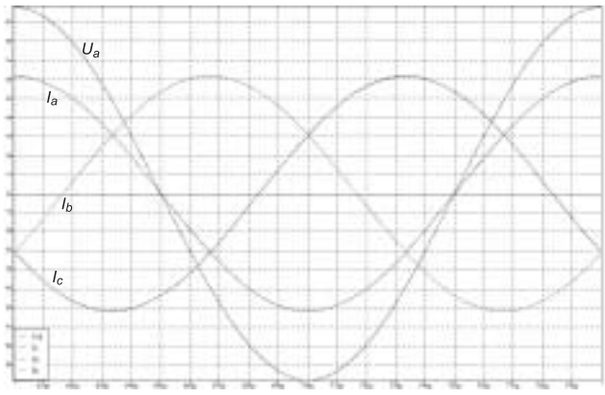

Fig. 10. The time plots of phase currents, phase voltage and regulator output signal for displacement angle of $\varphi_{(1)} = 0$

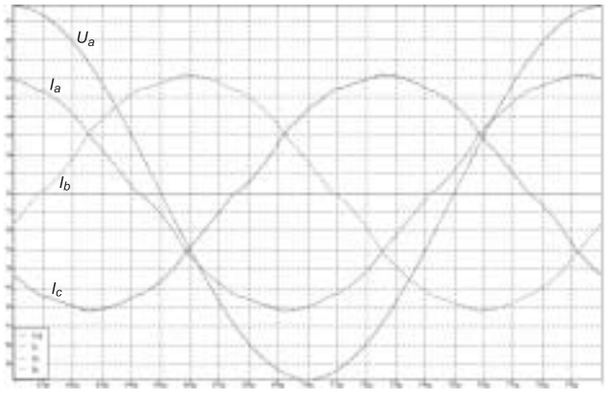

Fig. 11. The time plots of phase currents, phase voltage and regulator output signal for displacement angle of $\varphi_{(1)} = -\frac{\pi}{12}$

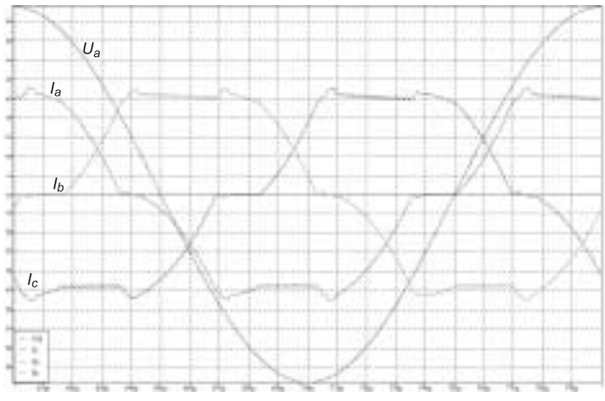

Fig. 12. The time plots of phase currents, phase voltage and regulator output signal for displacement angle of $\varphi_{(1)} = -\frac{\pi}{6}$

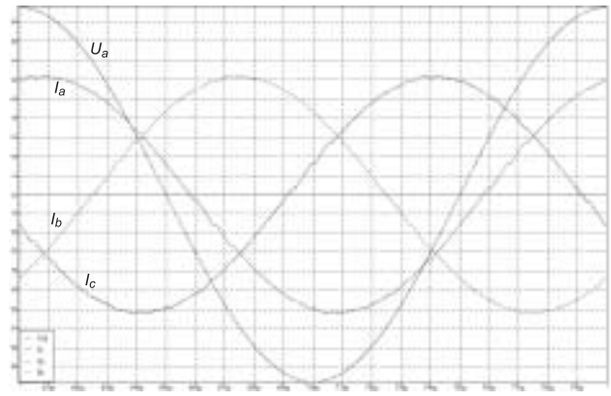

Fig. 13. The time plots of phase currents, phase voltage and regulator output signal for displacement angle of $\varphi_{(1)} = \frac{\pi}{12}$

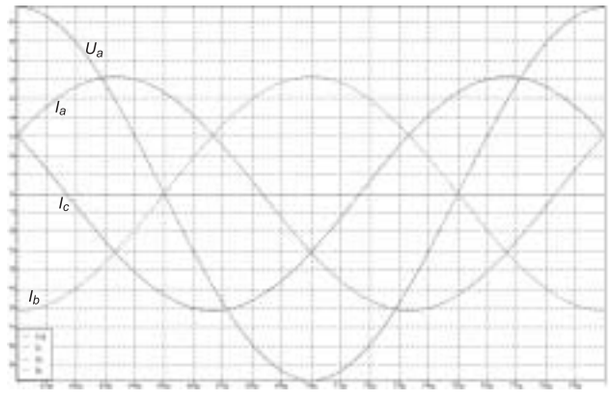

Fig. 14. The time plots of phase currents, phase voltage and regulator output signal for displacement angle of $\varphi_{(1)} = \frac{\pi}{3}$

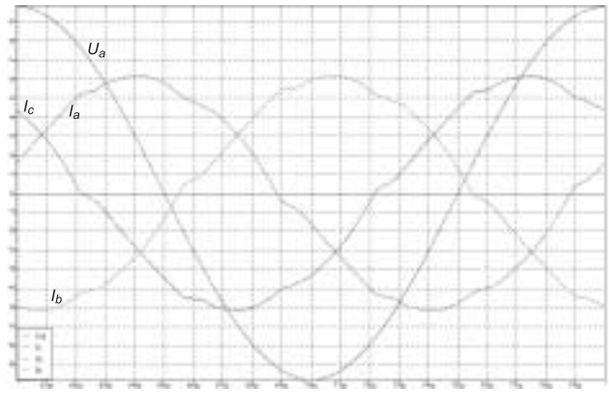

Fig. 15. The time plots of phase currents, phase voltage and regulator output signal for displacement angle of $\varphi_{(1)} = \frac{5\pi}{12}$

7. CONCLUSIONS

The mathematical model of the Vienna rectifier is presented in the paper. The set of voltage space vectors of the Vienna rectifier is defined. Input current zones in the relation to signs of the phase currents are defined. The relation between the active subset of voltage space vectors and current zones are carried out. Control area limitations are derived. The equivalent scheme of the output circuit is presented and described by equations and related block scheme. Simulations of the rectifier system in the case of different input displacement power angle are presented. The system limitations carried out in the theory are verified by the simulation results.

SYMBOLS

i_a, i_b, i_c, i_i, i_j, i_k — instantaneous values of the phase currents,

i_{C+}, i_{C-} — instantaneous values of the DC output capacitor currents,

i_{dc+}, i_{dc-}, i_n — instantaneous values of the DC rectifier output currents,

i_0 — instantaneous value of the output load current,

$s_a, s_b, s_c, s_i, s_j, s_k$ — electronic valves state functions,

s — vector of electronic switches state functions,

SectI — number of the current sector,

$u_{fa}, u_{fb}, u_{fc}, u_{fi}, u_{fj}, u_{fk}$ — instantaneous values of the phase voltages of the electric power utility,

$u_{Nn} = u_{S0}$ — instantaneous value of the zero sequence component voltage of the AC side converter phase voltages,

$u_{San}, u_{Sbn}, u_{Scn}, u_{Sin}$ — instantaneous values of the AC side converter phase voltages referenced to the centre point of the capacitive voltage divider,

$u_{Sa}, u_{Sb}, u_{Sc}, u_{Si}$ — instantaneous values of the AC side converter phase voltages referenced to the neutral point of the electric power utility,

$\mathbf{u}_s$ — vector of the AC side converter phase voltages referenced to the neutral point of the electric power utility,

u_{dc}, u_{dc+}, u_{dc-} — instantaneous values of the DC side output voltages,

$\underline{V}_0, \ldots, \underline{V}_7$ — base voltage space vectors of the AC side rectifier output in the base current zone (SectI=0),

e — error angle,

$\varphi_{(1)}$ — phase displacement angle between the first harmonic of phase current and phase voltage,

$\varphi_{s(1)}$ — phase displacement angle between the first harmonic of phase current and AC side rectifier voltage,

L_s — inductance of the phase magnetic coil,

C_+, C_- — DC output capacitors,

L_0 — load inductance,

R_0 — load resistance,

E — value of the load voltage,

f_{PWM} — modulation frequency.

REFERENCES

1. Kolar J.W., Zach F.C.: *A Novel Three-Phase Utility Interface Minimizing Line Current Harmonics of High-Power Telecommunications Rectifier Modules*. Record of the 16th IEEE International Telecommunications Energy Conference, Vancouver, Canada, Oct. 30-Nov. 3, pp. 367–374, 1994.
2. Kolar J.W., Ertl H.: *Status of the Techniques of Three-Phase Rectifier Systems with Low Effects on the Mains*. 21st INTELEC, Copenhagen, Denmark, June 6–9, pp. No. 14–1, 1999.
3. Miniböck J., Kolar J.W.: *Comparative Theoretical and Experimental Evaluation of Bridge Leg Topologies of a Three-Phase Three-Level Unity Power Factor Rectifier.* Proceedings of the IEEE Power Electronics Specialists Conference, Vancouver, Canada, June 17-21, 3, pp. 1641–1646, 2001.
4. Drofenik U., Kolar J.W.: *Comparison of Not Synchronized Sawtooth Carrier and Synchronized Triangular Carrier Phase Current Control for the VIENNA Rectifier I.* ISIE'99, Bled, Slovenia, 1999.
5. Miniböck J., Strögerer F., Kolar J.W.: *A Novel Concept for Mains Voltage Proportional Input Current Shaping of a VIENNA Rectifier Eliminating Controller Multipliers*. Proceedings of the IEEE 16th IEEE Applied Power Electronics Conference, Anaheim, USA, March 4–8, 1, pp. 587–591, 2001.
6. Strögerer F., Miniböck J., Kolar J.W.: *Implementation of a Novel Control Concept for Reliable Operation of a VIENNA Rectifier under Heavily Unbalanced Mains Voltage Conditions*. Proceedings of the IEEE Power Electronics Specialists Conference, Vancouver, Canada, June 17–21, 2001.
7. Malinowski M.: *Sensorless Control Strategies for Three-Phase PWM Rectifiers.* Warsaw University of Technology, Warsaw 2001, (PhD thesis).
8. Kaźmierkowski M. P., Krishnan R., Blaabjerg F.: *Control in Power Electronics – selected problems*. Academic Press, Elsevier Science (USA) 2002.
9. Strzelecki R., Supronowicz H.: *Współczynnik mocy w systemach zasilania prądu przemiennego i metody jego poprawy [Alternating Current Suply Systems and Methods of Its Improvement].* Oficyna Wydawnicza Politechniki Warszawskiej, Warszawa 2000.
10. Tunia H., Winiarski B.: *Energoelektronika. [Power electronics].* WNT, Warszawa 1994.
11. Radomski G.: *Analysis of Modified Diode Bridge Rectifier with Improved Power Factor*. Electrical Power Quality and Utilisation, 9, 1, 2003.
12. Radomski G.: *Experimental Investigations of Modified Diode Rectifier with Improved Power Factor.* Electrical Power Quality and Utilisation, 9, 1, 2003.

Grzegorz Radomski
was born in Kielce, Poland, in 1967. He received MSc and Ph.D. degrees from Technical University of Kielce in 1991 and 2001, respectively. Main fields of his scientific interest are rectifiers with improved power factor – clean power converters and control systems of electric drives for hybrid electric vehicles.
Address:
Technical University of Kielce
Al. Tysiąclecia Państwa Polskiego 7
25-314 Kielce, Poland
email: ene@tu.kielce.pl