INSTITUTE OF ENGINEERING & MANAGEMENT, KOLKATA

(School of University of Engineering and Management, Kolkata)

# End Semester Examination, November - December, 2025

Degree: **B.Tech** Semester: **First**

Stream: **BT / CSE(AI)/ CSE(AI & ML)/ CSE(Cybersecurity)/ CSE (IOT, CS, BT)/ CSE(Networks)/ CSBS/ CSE/ ECE/ EEE/ EE/ IT/ ME**

Paper Code: **ESCEC101**

Paper Name: **Basic Electronics Engineering**

Full Marks: **100** Duration: **3 Hours**

---

**Part - A**

**Attempt any 10 questions out of 15 questions**

**Each question carries 2 Marks (2 × 10)**

| | | |
|---|---|---|
| **1.** | What is the role of doping in semiconductors? | **2** |
| **2.** | Define active components. | **2** |
| **3.** | What is the role of temperature in carrier concentration? | **2** |
| **4.** | State the condition for forward bias in a diode. | **2** |
| **5.** | What is the efficiency of a half-wave rectifier? | **2** |
| **6.** | Define a Bipolar Junction Transistor (BJT). | **2** |
| **7.** | Sketch the V-I characteristics of a BJT in CE mode. | **2** |
| **8.** | What is the function of a BJT as a switch? | **2** |
| **9.** | What is the role of the gate in a MOSFET? | **2** |
| **10.** | What is the use of MOSFET as an amplifier? | **2** |
| **11.** | What is the main application of IGBT? | **2** |
| **12.** | Why is high CMRR important in Op-Amp circuits? | **2** |

**13.** Name two applications of differential amplifiers. **2**

**14.** What is TTL? State the applications of TTL. **2**

**15.** Why are NAND and NOR called universal gates? **2**

**Part - B**
**Attempt any 6 questions out of 9 questions**
**Each question carries 5 Marks (5 × 6)**

**16.** Calculate diffusion current for D=25cm$^2$/s, dn/dx=$10^{20}$ cm$^{-4}$. **5**

**17.** Compare active and passive components with examples. **5**

**18.** Design a voltage regulator using Zener diode. **5**

**19.** A $npn$ transistor with α=0.98 is operated in CB mode. If the emitter current is 3 mA and reverse saturation current $I_{co} = 10\mu$A, what are the base and collector current? **5**

**20.** Explain the structure and working of an IGBT. **5**

**21.** Explain how a MOSFET acts as a switch. **5**

**22.** Draw the circuit diagram of an inverting amplifier using an Op-Amp. Derive the expression for voltage gain. Mention two advantages and one limitation of this configuration. **5**

**23.** Show how NAND gates can be used to implement the following gates: NOT, AND, and OR Provide logic diagrams. **5**

**24.** Explain and draw the output waveform pattern for the clipper circuit given below. **5**

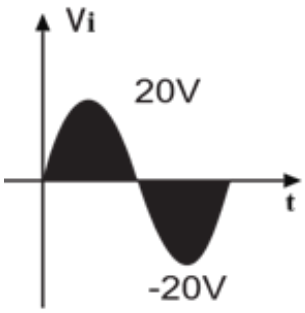


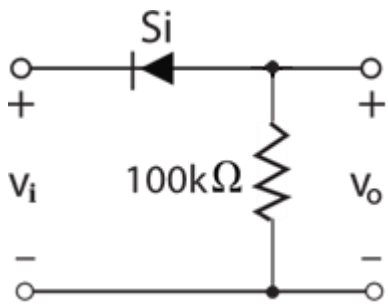

## Part - C

**Attempt any 5 questions out of 8 questions**

**Each question carries 10 Marks (10 × 5)**

**25.** For silicon at 300K, calculate intrinsic carrier concentration using $E_g = 1.1eV$. **10**

**26.** With circuit diagram, explain forward bias and reverse bias operations of a semiconductor junction diode. **10**

**27.** What is a Clamper Circuit? Design a clamper circuit to shift a sine wave signal to a required DC level and explain its working. **10**

**28.** Derive the expression for collector current using minority carrier distribution. **10**

**29.** Design a transistor switch circuit to control a 12V relay using a 5V logic signal. **10**

**30.** Compare planar MOSFETs with FinFETs in terms of structure, performance, and scaling. **10**

**31.** Explain positive and negative feedback with the help of Op-Amp circuits. Describe the advantages and disadvantages of each type and give one example circuit for both cases. **10**

**32.** Explain the working of XOR and XNOR gates using truth tables, symbols, and Boolean expressions. Discuss their importance in arithmetic circuits like adders and parity checkers with examples. **10**

**********