INSTITUTE OF ENGINEERING & MANAGEMENT, KOLKATA
(School of University of Engineering and Management, Kolkata)

End Semester Examination, November - December, 2025

Degree: **B.Tech** Semester: **First**

Stream: **BT / CSE(AI)/ CSE(AI & ML)/ CSE(Cybersecurity)/ CSE (IOT, CS, BT)/ CSE(Networks)/ CSBS/ CSE/ ECE/ EEE/ EE/ IT/ ME**

Paper Code: **ESME102B**

Paper Name: **Engineering Mechanics - Essentials**

Full Marks: **100** Duration: **3 Hours**

Part - A

Attempt any 10 questions out of 15 questions
Each question carries 2 Marks (2 × 10)

1. State the triangular law of forces. **2**

2. State Lami's theorem with a neat sketch? **2**

3. State the Parallelogram law of forces? **2**

4. Find the polar moment of inertia of a hollow circular section of external diameter 'D' and internal diameter 'd.' **2**

5. Locate the centroid and solve the moment of inertia about the centroidal axes of a semicircular lamina of radius 'r.' **2**

6. Define product of inertia. **2**

7. Explain the reason for the tension in both the strings be equal, when two masses are attached to its ends, and the inextensible string is made to pass over a smooth pulley. **2**

8. State Newton's first law of motion in simple terms. **2**

9. What is inertia? How is it related to mass? **2**

10. Why does a cyclist tilt inward while negotiating a curved path? **2**

11. What is centripetal force? What is its direction and formula? **2**

12. What is centrifugal force? What are its direction and formula? **2**

13. State the law of conservation of energy. **2**

14. How is work related to kinetic energy? **2**

15. What is the SI unit of work? Define it. **2**

Part - B

Attempt any 6 questions out of 9 questions

Each question carries 5 Marks (5 × 6)

16. A force P is applied at 'O' to the string AOB as shown in figure. If the tension in each part of strings is 50 N, Find the direction and magnitude of force P for equilibrium conditions. **5**

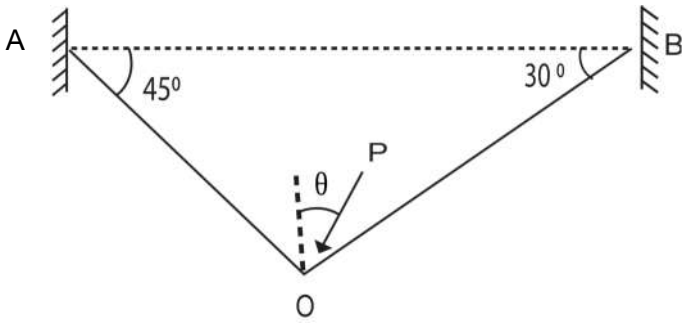

17. Find the resultant of the force system shown in figure. Radius = 2.5m. **5**

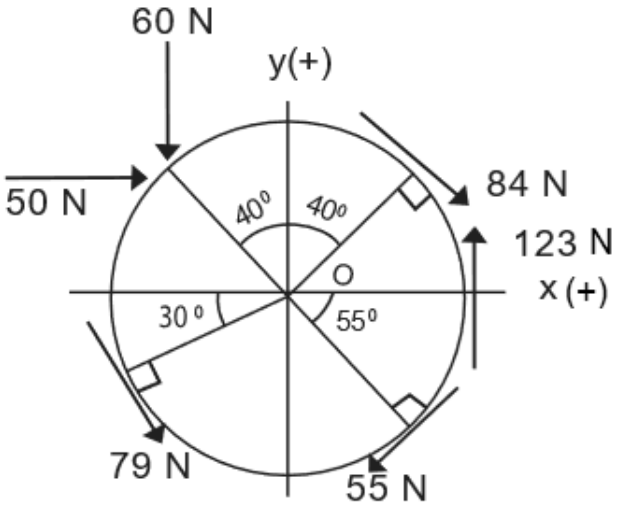

18. A solid hemisphere of density 2ρ is attached centrally to a solid cylinder of density ρ. Find the height of the cylindrical portion to have the CG of the solid combination on the axis of symmetry at the junction between the hemisphere and the cylinder. Take the cylinder diameter as 100 mm. **5**

19. Locate the centroid of the area shown in figure below. The dimensions are in mm. **5**

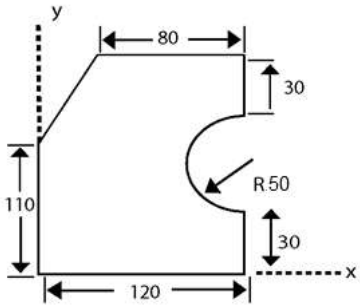

20. A body of 5 kg mass starts from rest and attains a speed of 4 m/s, travelling a horizontal distance of 10 m. Take $\mu = 0.25$ and find the horizontal force applied on the body. **5**

21. A cyclist, whose mass with his cycle is 100 kg, is moving with a speed of 18 km/hr. If he stops pedalling, find the distance further travelled before coming to rest. Take resistance to motion = 49 N. **5**

22. The motion of a cam is defined by the relation $\theta = t^3 - 8t + 15$, where θ is expressed in radians and t in seconds. Determine the angular displacement, angular velocity and angular acceleration after: **5**

(*a*) 2 s

(*b*) 4 s

23. The angular acceleration of a flywheel is given by the expression $\alpha = 6t - t^2$ where α is in rad/s^2 and t is in second. When will the flywheel stop momentarily prior to reversing the direction, given that the flywheel starts from rest. How may revolutions are made during this time? **5**

24. A 2 kg block is placed at the top of a 5 m high smooth incline. It slides down and collides elastically with a 3 kg block at the bottom, initially at rest. Determine the velocity of both blocks after the collision and verify the conservation of energy. **5**

Part - C

Attempt any 5 questions out of 8 questions

Each question carries 10 Marks (10 × 5)

25. Two cylinders E,F of diameter 60mm and 30mm. Weighing 160N and 40 N respectively are placed as shown in figure. Assuming all the contact surfaces to be smooth, find the reactions at the contact points. **10**

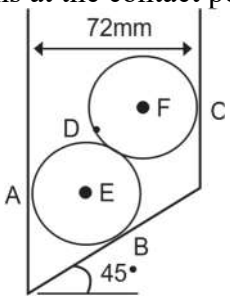

26. To accommodate the rise and fall of the tide, a walk way from a pier to a float is supported by two rollers as shown. If the mass centre of the 300kg walkway is at G, calculate the tension T in the horizontal cable which is attached to the cleat and find the force under the roller t A. **10**

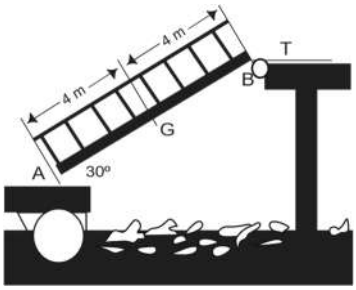

27. Determine the centroid of the shaded area as shown in figure. **10**

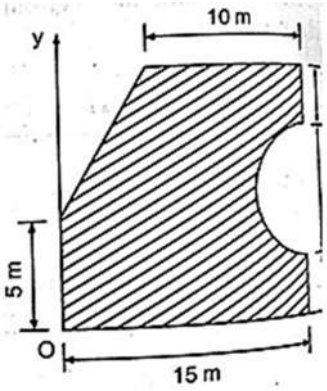

28. Determine moment of inertia and radii of gyration of the shaded area in figure about AB and the centroidal axis parallel to AB. **10**

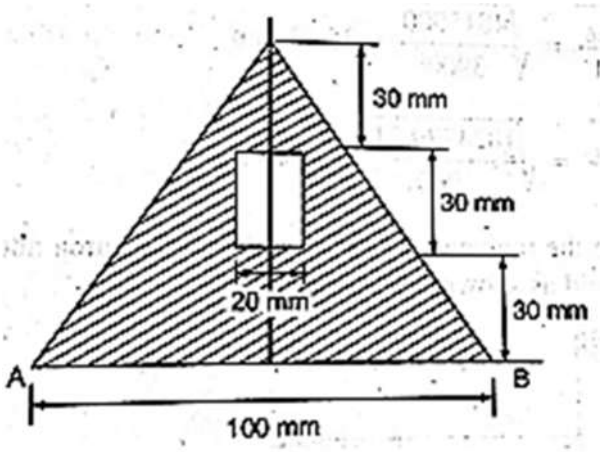

29. A stone of 2 kg falls from 60 m height and is then brought to rest after penetrating 60 cm in the mud. Find the average resistance of mud on it. **10**

30. The velocity of a steam locomotive is reduced from 30 km/hr to 15 km/hr after the steam is shut-off and the train travels 150 m. Find the resistance acting on the train if the mass of the train is 80×10^3 kg. Also find out the distance travelled further by the train before coming to rest. **10**

31. A cyclist is riding in a horizontal circle of radius 20 m at a speed of 18 kmph. What should be the angle to the vertical of the centre line of the bicycle to ensure stability? What is the maximum velocity with which he can negotiate the curve if the weight of the bicycle and the man is 800 N and the C.G. is 450 mm above the road surface? Take the coefficient of friction $\mu = 0.6$. **10**

32. A 1000 kg car travelling at 25 m/s suddenly applies brakes and comes to a stop in 50 m. Find the average braking force, determine the power dissipated as heat when the car's speed is 10 m/s, calculate the additional work required to bring it to rest if no brakes were applied earlier, find the stopping distance if the car was moving downhill at 10°, and analyse the energy lost due to non-conservative forces in both cases. **10**

****