EXCELLENCE. SIMPLY DELIVERED.

Message Specification Guidelines

Global EDI Manifesting Service
IFTMIN D01B version 3.0
(document version 2.5)

Confidentiality

The specifications, definitions and examples in this manual are to be used by the recipient for the sole purpose of programming to meet the requirements of DHL, and should not be altered or modified by the recipient.

This document contains confidential, proprietary information. No part of this document may be used, modified, reproduced, disseminated, or disclosed without the express written consent of DHL. DHL employees, third-party vendors, and others authorized to use this document shall only disclose this information internally to their coworkers, employees, or agents on a need-to-know basis and in keeping with DHL confidentiality requirements. The information in this document is subject to change without notice.

DHL SHALL NOT BE LIABLE FOR TECHNICAL OR EDITORIAL ERRORS OR OMISSIONS CONTAINED HEREIN NOR FOR INCIDENTAL OR CONSEQUENTIAL DAMAGES RESULTING FROM THE USE OF THIS INFORMATION.

© 2005 - 2016 DHL Express, Inc. All rights reserved.

Terms and Conditions

The requirements and specifications outlined in this manual are governed by DHL's Terms and Conditions of Carriage, found on DHL's website, www.DHL.com.

Audience

This document is intended to serve as a guide to assist DHL customers and third party developers during the integration development process. This document contains the record layout of DHL Global Standard Manifesting messages. The primary audience of this document is intended to be a trading partner's technical resources and internal DHL EDI support staff.

Table of Contents

Confidentiality 2
Terms and Conditions 3
Audience 4
Table of Contents 5
Document change report 8
Introduction 9
Definition of EDI 10
Service Terms and Conditions 11
Contact Details 12
IFTMIN Message Description 13
IFTMIN Segment Descriptions 14
No Commercial/Proforma Invoice Provided: 17
With Commercial/Proforma Invoice Provided: 18
IFTMIN Specification Layout 19
UNH - Message Header 19
BGM - Beginning of Message 20
DTM Segment - Date/Time/Period 21
TSR Segment – Transport Service Requirements 22
MOA Segment – Monetary Amounts 23
FTX Segment – Free Text 24
CNT Segment – Control Totals 25
SG1 LOC Segment – Place/Location Identification 27
SG2 TOD Segment – Terms of Delivery 28
SG2 LOC Segment – Terms of Delivery Location 29
SG3 RFF Segment – References 30
SG4 GOR Segment – Governmental Requirements 32
SG5 DOC Segment – Documents/Message Details 33
SG5 DTM Segment – Date/Time/Period 34
SG6 CPI Segment – Charge Payment Instructions 35
SG6 MOA Segment – Monetary Amount 36
SG11 NAD Segment – Name and Address 37
SG12 CTA Segment – Contact Information 39
SG12 COM Segment – Communication Contact 40

SG15 RFF Segment – References 41
SG17 TSR Segment – Transport Service Requirements 42
SG17 FTX Segment – Free Text 43
Piece Details SG18 GID Segment – Goods Item Details 44
SG18 FTX Segment – Free Text 45
SG20 MEA Segment – Measurements 46
SG21 DIM Segment – Dimensions 47
SG22 RFF Segment – References 48
SG23 PCI Segment – Package Identification 49
SG23 GIN Segment – Goods Identity Number 50
SG18 GID Segment – Goods Item Details 51
SG18 LOC Segment – Place/Location Identifier 52
SG18 MOA Segment – Monetary Amount 53
SG18 FTX Segment – Free Text 54
SG20 MEA Segment – Measurements 55
SG22 RFF Segment – References 56
SG24 DOC Segment – Document/Message Details 57
SG31 TCC Segment – Charge/Rate Calculation Details 58
SG31 QTY Segment – Quantity 59
UNT Segment – Message Trailer 60
Appendix A - Product Type 61
Appendix B – Product Features 65
Appendix C - Example File 68
Appendix D – Loose BBX usage and sample message 69
Appendix E – Commercial Invoice data usage and sample message 74
Appendix F – Return Shipments 81

Document change report

Date	Version	Name	Reason for Change	Status
01/02/2013	0.1	Annie Richardson	First draft	Draft
04/07/2013	0.2	Jan Hornak	Product codes review	Draft
12/27/2013	0.3	Jan Hornak	BBX review	Draft
5/16/2014	0.4	Kris Michelle S. Malano	Advance shipment - Add Appendix B – Product Features	Draft
08/02/2016	0.5	Frantisek Sustr	Global map v2 update	Draft
21/10/2016	0.6	Frantisek Sustr	GM2 – included review comments	Draft
03/03/2020	0.7	Bedrich Jedlicka	Modified for LBX purposes: CNT+56: number of mother pieces (placed in each baby shipment, needed for label), SG11 NAD+JD: address qualifier for Port of Entry Appendix B added (Additional Product Features), Appendix D added (LBX)	
6/5/2020	0.8	Bedrich Jedlicka	LBBX: Additional information that Baby Importer must be the same as Mother Receiver	Draft
09/11/2020	0.9	Diana T. Chua	Added VAT22 related changes.	Draft
25/06/2021	1.1	Diana T. Chua	Added account number mapping for Extra Charge Codes	Baseline
30/07/2021	2.0	Francis Clement Favor	MOA – added new note SG15 RFF segment RFF/C506/1156	Update
15/11/2021	2.1	Lee White	Added Appendix F – Return Shipments	Update
22/12/2021	2.2	Lee White	Modified Appendix F – Return shipments to include corrected mapping of Duty Free Import Remarks (FTX with AAU qualifier)	Update
30/09/2022	2.3	Alma Enriquez/ Lee White	Added notes for low value dutiable shipments to Singapore Removed Appendices for Reference Data and references to them, referring to DHL Reference Data document instead	Update
12/10/2022	2.4	Diana Chua	Updated the branching diagram to reflect the actual data structure and updated VAT22 sample data	Update
10/07/2023	2.5	Diana Chua	Added notes for enabling the “Perfect Invoice” to carry further Duty/Tax amounts on Commercial Invoice (see MOA segment – C516)	Update

Introduction

This specification provides the definition of the global standard DHL manifesting EDI messages. This is a guide to be used in satisfying the requirements when exchanging electronic data to become a certified trading partner with DHL and its partners. The data contained in these EDI messages consist of manifesting information related to the transportation of cargo and transport related charges.

For purposes of this document, “Charges” means all applicable transportation and other charges, including but not limited to, all applicable accessorial charges, surcharges, additional handling charges, late payment fees, and collection costs including collection agency fees, legal fees, court costs, credit reports, and bad check collection fees, in accordance with applicable laws.

Notwithstanding any billing plan that is in effect or payment or billing option selected at the time of shipment, the shipper is ultimately liable for and agrees to pay all Charges, including in the event of insolvency, bankruptcy, or non-payment or refusal to pay by the consignee or third party.

All Charges must be ‘paid in full’ (per the invoice), in the lawful currency noted as the billing currency.

Definition of EDI

EDI is the computer to computer exchange of business transactions between organizations in an agreed upon format. "Computer-to-computer" means that the data sent or received is communicated via electronic transmission, without human intervention or interpretation.

Maintaining standardized formats is the foundation of a Global EDI service. EDI requires business partners to follow the standards as defined by the format layout and content held within. After integrating onto the EDI platform, data will be converted by EDI translation programs into the exact same format and provided by each country. Industry standard formats have been defined by EDIFACT, ANSI and RosettaNet.

Service Terms and Conditions

Unless otherwise agreed in writing, the transportation products and services mentioned in this document are subject to DHL's Terms and Conditions of Carriage. Since these may vary depending on location of the country of origin of the shipment, please contact the nearest DHL service center to obtain a copy of the local terms and conditions. Not all of DHL's products and services may be available in every country.

It is the customer's responsibility to complete an appropriate amount of testing and inform DHL when their systems are ready to send and/or receive the electronic files. DHL will provide test files as they become available until customer has completed their testing and provides written confirmation that they are ready to be moved to production status.

Contact Details

To receive the best support of global EDI service it is best to contact the regional managers who support this Global service. They can best assist with current local billing information. Below is the template for contacting each region.

Contact Details	Type of Help	Subject Line
Sales contact	Implementation Requests	
expressedi.global@dhl.com	Setup Packet	Setup

IFTMIN Message Description

The IFTMIN message is used as EDI message that is transmitted by some means from customer (Consignor/Shipper) to DHL. Each IFTMIN message contains one shipment. One or more messages are transmitted in an interchange.

Type of fields
There are four types of fields:

M Mandatory - This item must be present in all data transactions - used for critical data which is also Mandatory in the EDIFACT standard.

R Required - This item must be present in all data transactions. In the opinion of the implementation guide designers it is essential for this business use of the transaction set, however not defined as Mandatory in the EDIFACT standard.

C Conditional - This item is the subject of a syntax rule (a relational condition) which links its usage with that of other items. If not used a data element separator giving its position must still be given, unless it appears at the end of a segment in which case the data element separator is also not required.

X Not Used - This item is not used in a data transaction. A data element separator giving its position must still be given, but no content should be given, unless it appears at the end of a segment in which case the data element separator is also not required.

Declaration of data elements
This section is related to the subset diagram that specifies the mandatory and conditional requirements.

UNH - Message header
A service segment used to start and uniquely identify the message.

BGM - Beginning of message
A segment to indicate the beginning of the message and to transmit an identifying number (e.g. order number), type, date and the function of the message.

DTM - Date/time/period
A segment used to indicate the creation date and time of the message.

TSR - Transport service requirements
A segment indicating products.

MOA - Monetary amounts
This segment is used to indicate a monetary value for the entire shipment, e.g. cash on delivery or insurance.

FTX - Free Text
This segment consists of texts like remarks or export reason. These texts are shown on the hand terminal or delivery note at delivery of the shipment.

CNT - Control totals
This segment is used to specify totals of the consolidation (e.g. total number of equipment, total number of shipments, total gross weight and/or dimensions of the whole consolidation etc.).

IFTMIN Segment Descriptions

Segment Group 1

- **LOC** - Place/Location

This segment is used to identify a location applying to the entire message.

Segment Group 2

- **TOD** - Terms of delivery

A Segment to specify the applicable terms of delivery, like product features and transport charges.

- **LOC** – Location/place of identification

A segment to specify the location related to the terms of delivery.

Segment Group 3

- **RFF** - References

A segment to indicate a reference.

Segment Group 4

A group of segment to indicate documents.

- **GOR** - Governmental requirements

A mandatory segment to get access to the DOC segment.

Segment Group 5

A group of segment to indicate documents.

- **DOC** - Document

A segment to indicate accompanying documents for customs clearance.

- **DTM** - Date/Time/Period

A segment to specify the date/time related to the required document.

Segment Group 6

A group of segments to indicate charge methodology which applies to the entire message.

- **CPI** – Charge payment instructions

A segment to indicate default charge methodology.

- **MOA** – Monetary amount

A segment to identify the monetary amount associated with the charges.

Segment Group 11 (SG12 - SG17)

A segment group to indicate addresses and contact persons.

- **NAD** - Name and address

A segment with names and addresses.

Segment Group 12

A segment group to indicate the delivery party

- **CTA** - Contact information

A segment with identification of the use of the COM segment.

- **COM** - Communication contact

A segment with telephone number of the different party roles such as Consignee/Receiver.

Segment Group 15

A group of segments used to indicate references regarding the delivery.

- **RFF** - References

A segment used to indicate the Registration Numbers (i.e VAT number) of the different party roles such as Consignee/Receiver.

Segment Group 17
A group of segments used to indicate transport service requirements and its associated details related to an associated party.

- **TSR** – Transport service requirement

A segment used to indicate the required service for the transport.

- **FTX** – Free text

A segment used to indicate any additional information such as business party trader type.

Piece Details
Segment Group 18 (SG20 - SG21 - SG22 - SG23)
A group of segment used to describe the goods items for which transport is undertaken.

- **GID** - Goods items details

A segment used to identify a goods item for which transport is undertaken.

- **FTX** - Free Text

A segment used to specify pre-processed supplementary information relating to the goods item.

Segment Group 20
A group of segments to specify measurements applicable to a goods item.

- **MEA** - Measurements

A segment to specify measurements, applicable to a goods item.

Segment group 21
A group of segment used to specify dimensions applicable to a goods item.

- **DIM** - Dimensions

A segment used to specify dimensions, applicable to a goods item.

Segment group 22
A group of segments to identify references to a goods item.

- **RFF - Reference**

A segment to identify a reference to a goods item.

Segment Group 23
A group of segments with marks (like a unique barcode) of the shipped items.

- **PCI** - Package identification

A segment used to indicate the type of markings of the item.

- **GIN** - Goods identify number

A segment containing the bar coded identification code (e.g. CEN License Plate).

Invoice Line Item Details
Segment Group 18 (SG20 - SG22 - SG24 - SG31)
A group of segment used to describe the goods items for which transport is undertaken.

- **GID** - Goods items details

A segment used to identify a goods item for which transport is undertaken.

- **LOC** – Place/location identifier

A segment used to identify the country of manufacture relating to the goods item.

- **MOA** – Monetary amount

A segment used to specify a monetary amount associated to the goods item such as goods item total customs value, single article customs value etc.

- **FTX** - Free Text

A segment used to specify pre-processed supplementary information relating to the goods item.

Segment Group 20
A group of segments to specify measurements applicable to a goods item.

- **MEA** - Measurements
  A segment to specify measurements, applicable to a goods item.

Segment group 22
A group of segments to identify references to a goods item.

- **RFF - Reference**
  A segment to identify a reference to a goods item.

Segment Group 24
A group of segments to indicate the documents and associated documents related to the goods item.

- **DOC** – Document/message details
  A segment used to specify the documents prepared for the goods item.

Segment Group 31
A group of segments to indicate the quantity for the goods item.

- **TCC** – Charge/rate calculations
  A segment used to indicate the charge related to the goods item.
- **QTY** - Quantity
  A segment used to indicate the quantity related to the goods item.

UNT - Message trailer
A service segment ending a message, giving the total number of segments in the message (includes UNH-UNT).

Message branching diagram

No Commercial/Proforma Invoice Provided:

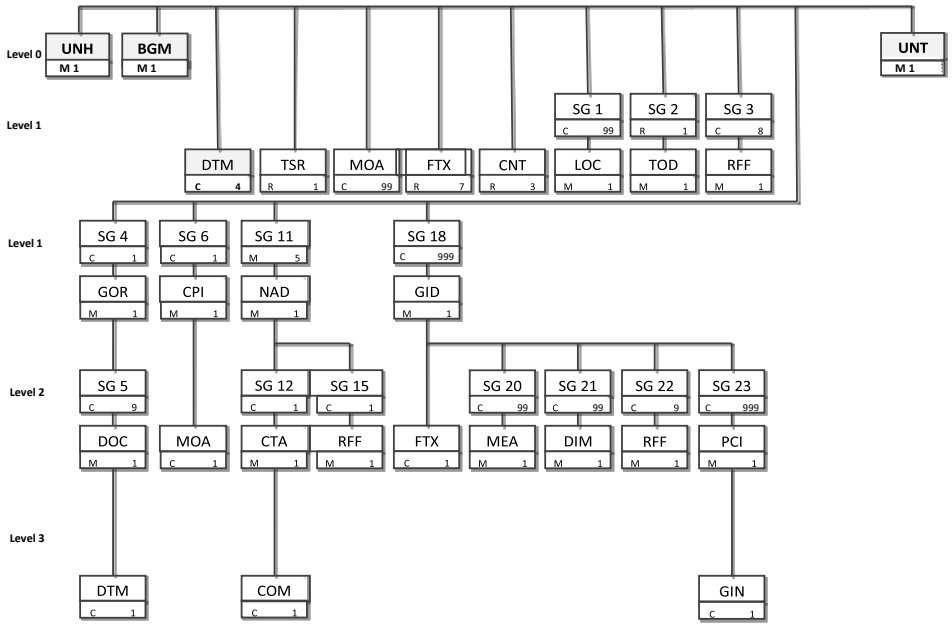

With Commercial/Proforma Invoice Provided:

- Shipment/Piece details need to be repeated for each invoice due to EDIFACT structure requirement, however, only the 1st will be captured and sent to downstream to avoid duplicities.

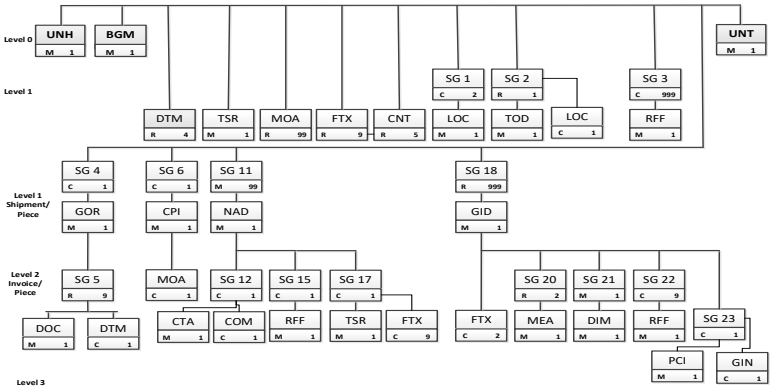

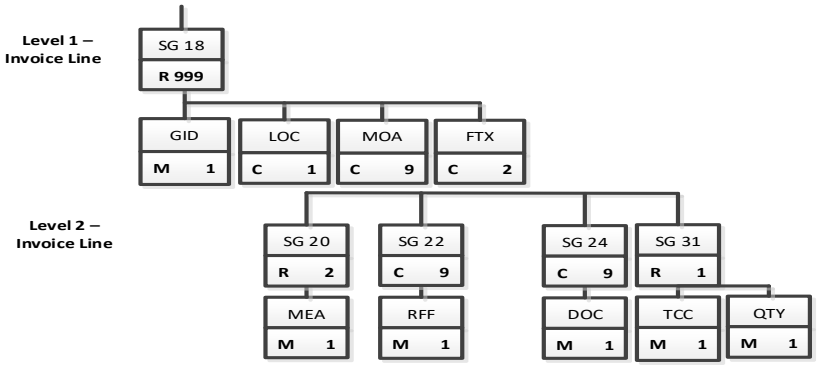

IFTMIN Specification Layout

The following segments are only part of the message IFTMIN. For a complete EDI transmission, the interchange information is also essential.

UNH - Message Header

Segment	Occurrence	Usage	Description
UNH	**1**	**M**	**Message Header**
Function: To head, identify and specify a message.			

Element	Usage	Format	Element Name
0062	M	AN..14	Message reference number
S009	**M**		**MESSAGE IDENTIFIER**
0065	M	AN..14	Message type identifier
0052	M	AN..14	Message type version number
0054	M	AN..14	Message type release number
0051	M	AN..14	Controlling agency
0068	R	AN..35	Common access reference

Example: UNH+123+IFTMIN:D:01B:UN+GM2/DCGFW3.9'

Note 0062: An application generated unique message reference number. This number must be unique for a period of 3 months.
Note 0065: Use 'IFTMIN'
Note 0052: Use 'D'
Note 0054: Use '01B'
Note 0051: Use 'UN'
Note 0068: DHL Express determined identification for recognizing the version of the subset and source (application) that created the message. The data is divided with Slash ('/'). The version for this issue of the document is GM2.
The source will be bilaterally agreed with DHL Express. Generally this will be a concatenation of the name, version and release of the generating software.

BGM - Beginning of Message

Segment	Occurrence	Usage	Description
BGM	**1**	**M**	**Beginning of Message**
Function: To indicate the type and function of a message and to transmit the identifying number.			

Element	Usage	Format	Element Name
C002	**M**		**DOCUMENT / MESSAGE NAME**
1001	R	AN..3	Document name code
C106	**M**		**DOCUMENT MESSAGE IDENTIFICATION**
1004	M	AN..35	Document identifier
1225	R	AN..3	Message function code

Example: BGM+785+9600280001+9'

Note 1001: Use '785' – Cargo Manifest
Note 1004: Waybill or Shipment ID number
Note 1225: Use '9' – Original

DTM Segment - Date/Time/Period

Segment	Occurrence	Usage	Description
DTM	**4**	**R**	**Date, Time or Period**
Function: A segment to indicate date and time.			

Element	Usage	Format	Element Name
C507	**M**		**DATE/TIME/PERIOD**
2005	M	AN..3	Date/Time/Period function code qualifier
2380	R	AN..35	Date/Time/Period value
2379	R	AN..3	Date/Time/Period format code

Example: DTM+9:200906011500:203'
DTM+11:200908201600:203'
DTM+63:200906111500:203'
DTM+64:200906111630:203'

Note: This segment is at least used twice, for specifying the processing date/time of the EDI message and for specifying the dispatch of the shipments.

Note 2005: Use:
'9' - Processing date/time (that the file is created and send to DHL)
'11' - Dispatch date/time of the shipment
'63' - Delivery date/time latest
'64' - Delivery date/time earliest
Qualifier 63 and 64 are only used in combination with the Delivery Time window features. If you wish to have more information about the time delivery window feature, please consult your Sales Representative.

Note 2380: With '11' in preceding element, this is date/time on which the goods are or are expected to be dispatched or shipped. Allowed is the current date. The specified format is mandatory.

Note 2379: Use:
'203' for the date time mask CCYYMMDDHHMM

TSR Segment – Transport Service Requirements

Segment	Occurrence	Usage	Description
TSR	**1**	**M**	**Transport Service requirements**
Function: To specify contract and carriage conditions and service and priority requirements for the transport.			

Element	Usage	Format	Element Name
C536	**X**		**CONTRACT AND CARRIAGE CONDITION**
C233	**X**		**SERVICE**
C537	**R**		**TRANSPORT PRIORITY**
4219	M	AN..3	Transport service priority code
1131	R	AN..17	Code list identification code
3055	R	AN..3	Code list responsible agency code

Example: TSR+++189:57:87' (Express Worldwide EU)
TSR+++110:57:87' (Economy Select EU)

Note 4219: Use of this element is to indicate the DHL product. For more information about the product codes, please consult your Sales Representative.
Note 1131: Use '57' – Product code
Note 3055: Use '87' – Assigned by carrier

MOA Segment – Monetary Amounts

Segment	Occurrence	Usage	Description
MOA	**99**	**R**	**Monetary Amount**
Function: To specify monetary amounts.			

Element	Usage	Format	Element Name
C516	**M**		**MONETARY AMOUNT**
5025	M	AN..3	Monetary amount type code qualifier
5004	R	N..18	Monetary amount
6345	R	AN..3	Currency identification code

Example: MOA+43:1500,90:EUR'

Note: DHL will only accept 5 monetary amount other than 43 – Total Customs Value (TCUSV) and 79 – Invoice Line Items Total Value (TINVA)

Note 5025: Use for shipments without any invoice information.
'22' - Cash on delivery (COD)
'43' – Total Customs value
'64'- Freight charge (Shipment transport charge)
'157' - Insurance value
For list of Invoice Monetary Amount Types, refer to "DHL Express Integrated Solution Reference Information" (available from DHL Express on request)

For DDP shipments (refer to SG2 TOD Segment, C100/4053 Element), the following additional charges must be provided:
'55' – Import Duty Value
'161' – Import Tax Value
Sum of '55' + '161' + '43' – Import Total Value will be calculated by DHL.

Note 5004: Rules for numeric value:

- The maximum number of digit is 18 where the 3 decimals are included.
- All amounts have to be specified with 2 decimals included, regardless currency.
- Decimal sign may be point or comma depending of what has been specified in segment UNA.
- Cash on Delivery (COD) value has to be given in the currency of the destination country. Note 6345: Currency codes are according to ISO 4217.

FTX Segment – Free Text

Segment	Occurrence	Usage	Description
FTX	**9**	**R**	**Free Text**
Function: To specify description of goods.			

Element	Usage	Format	Element Name
4451	M	AN..3	Text Subject code qualifier
4453	X	AN..3	Free text function code
C107	**X**		**TEXT REFERENCE**
C108	**R**		**TEXT LITERAL**
4440	M	AN..256	Free text value

Example: FTX+AAA+++ELECTRONIC COMPONENTS’
FTX+CEX+++P'
FTX+AAI+++Commercial'

Note 4451: Use:
‘AAA’ - Goods description
‘AAB’ - Terms of Payment (COD)
‘CCI’ – Customs clearance instructions
‘DIN’ - Delivery instructions
‘HAN’ - Handling instructions
‘LOI’ - Loading instruction
‘SPH’ - Special handling
‘CEX’ – Reason for Export
‘AAI’ – Trading Transaction Type
‘AAU’ – Duty Import Remarks
For other codes, please consult your Sales Representative.
When customer wants to specify the method of payment in case of Cash on Delivery, the qualifier ‘AAB’ has to be used.

Note 4440: Goods description (qualifier ‘AAA’) is mandatory for all shipments.
In case the customer is using qualifier AAB to specify the terms of payment, the element 4440 should content one letter code (from A to Q) – Please consult your Sales Representative in order to have more information about the country specific codes.

In case the customer is using qualifier AAI, only Commercial or Personal are accepted, For full list of Trading Transaction Types, refer to "DHL Express Integrated Solution Reference Information" (available from DHL Express on request)

In case the customer is using qualifier CEX, for full list of Reason for Export values, refer to "DHL Express Integrated Solution Reference Information" (available from DHL Express on request)

CNT Segment – Control Totals

Segment	Occurrence	Usage	Description
CNT	**5**	**R**	**Control Totals**
Function: To provide control total.			

Element	Usage	Format	Element Name
C270	**M**		**CONTROL**
6069	M	AN..3	Control total type code qualifier
6066	M	N..18	Control Total value
6411	C	AN..3	Measurement unit code

Example:
CNT+7:225,1:KGM'
CNT+11:100'
CNT+15:25,500:MTQ'
CNT+56:137'
CNT+29:6.5067:KGM'

Note:
This segment is used to indicate total gross weight for the entire shipment, total number of pieces in the shipment and total volume of the shipment for single invoices.
For multiple invoices tied to one shipment, this segment is used to indicate the total gross weight for that invoice. The total gross weight for the entire shipment will then be indicated under the GID segment.
The total volume is required for a shipment with destination outside the Shipper country. It can be provided here or the dimensions per item can be provided later in the GID segment.
The maximum of pieces cannot exceed 999 in one shipment.

Note 6029:
Use:
'7' - Gross Weight. In 6066, maximum number of digit is 15 where the 3 decimals are included.
'11' - Total number of Pieces. In 6066 the value may be specified the maximum number of digit is 15 with maximum 3 decimals.
'15' - Cube, Volume
'29' – Net Weight. In 6066, the maximum number of digit is 15 where the 3 decimals are included.

56: This segment represents control totals within respective Shipment.
For "LBBX Customer Controlled solution" purposes - this segment should be sent within the each 'baby' shipment.
for LBBX purposes: Total number of transport units (number of mother pieces = sum of all baby pieces – optional.)

Decimal sign may be point or comma depending of what has been specified in the UNA segment.

Note 6411:
Use:
'KGM' – Kilograms. With '7' in 6069, use 'KGM'.

‘MTQ’ – Cubic meters. With ‘15’ in 6069 use MTQ.
‘CMQ’ – Cubic centimeters. With ‘15’ in 6069 use CMQ.
Element 6411 is not used with ‘11’ in 6069.
Element 6411 is not used with ‘56’ in 6069.

SG1 LOC Segment – Place/Location Identification

Group	Occurrence	Usage	Description
SG1	**2**	**C**	**LOC**
Function: A group of segments to specify locations which apply to the entire message, e.g. place of departure.			

Segment	Occurrence	Usage	Description
LOC	**1**	**M**	**Place/Location Identification** **SG1**
Function: To specify a location.			

Element	Usage	Format	Element Name
3227	M	AN..3	Location function code qualifier
C517	**R**		**LOCATION IDENTIFICATION**
3225	R	AN..25	Location name code
C519	**C**		**RELATED LOCATION ONE IDENTIFICATION**
3223	R	AN..25	First related location name code
C553	**C**		**RELATED LOCATION TWO IDENTIFICATION**
3233	R	AN..25	Second related location name code
1131	X	AN..17	Code list identification code
3055	X	AN..3	Code list responsible agency code
3232	R	AN..70	Second related location name

Example: DHL Express TD: LOC+5+PRG+GTW+SC77:::C'
DHL Express TD: LOC+8+BFS'
DHL Express DD: LOC+7+AMS'

Note: The segment LOC with qualifier '5' is required for DHL Express TD when SG4/NAD+PW or full NAD+CZ is not provided.
The segment LOC with qualifier '8' is mandatory for DHL Express TD to indicate the DHL destination service area code and optionally DHL destination facility code.
It is also mandatory for DHL Express DD shipments with product feature 'Hold at Depot' and 'PackStation'. In this segment, the appropriate code is specified.

Note 3227: Use:
'5' - Place of origin. Use for DHL Express TD.
'8' - Place of destination. Use for DHL Express TD.
'7' - Place of delivery. Use for DHL Express DD.

Note 3225: A list of DHL Express TD service area codes and the DHL Express DD codes are available on request at your Sales Representative.

Note 3223: A list of DHL Express TD facility codes is available on request at your Sales Representative.

Note 3233: Pick-up tour identifier for DHL Express TD. A valid value is available on request at your Sales Representative.

Note 3232: Pick-up tour cut off time code for DHL Express TD. A code describing the cut off time for the pick-up tour. A valid value is available on request at your Sales Representative.

SG2 TOD Segment – Terms of Delivery

Group	Occurrence	Usage	Description
SG2	**1**	**R**	**TOD**
Function: A group of segments to specify terms of delivery and related locations.			

Segment	Occurrence	Usage	Description	
TOD	**1**	**M**	**Terms of Delivery**	**SG2**
Function: To specify terms of delivery or transport.				

Element	Usage	Format	Element Name
4055	R	AN..3	Delivery or transport form function code
4215	R	AN..3	Transport charges payment method code
C100	**R**		**TERMS OF DELIVERY OR TRANSPORT**
4053	R	AN..3	Delivery or transport terms description code
1131	X	AN..17	Code list identification code
3055	X	AN..3	Code list responsible agency code
4052	C	AN..60	Delivery or transport terms description
4052	C	AN..63	Delivery or transport terms description

Example: TOD+6++DDU' (Default value or no feature)
TOD+6++CPT:::050051' (Using product features 'Saturday delivery' and 'Named signature')
TOD+6++DDU:::958' (Using the 'Recap with signature' feature)
TOD+6++DDU:::300' (Using the direct injection product feature)
TOD+6+A+DDU:::220:ACC123456' (Represents the 'Importer of Record' Service)

Note: Segment group 2 is mandatory to indicate freight costs payment and also to register the agreement between the Seller and the Buyer (Incoterms). On conditional base, product features can be indicated. If you wish to have more information about the product features and availability please contact your Sales representative.

Note 4055: Use '6' – Delivery conditions

Note 4215: Use 'A' – If a product feature to be provided requires an account number associated to it.

Note 4053: Incoterms, the default value is 'DDU'.
To have a complete list of all possible incoterms, please contact your Sales representative.

Note 4052: This element is reserved for product features. All appropriate product features should be stored in this element, without separation sign. See example and Appendix B. The format of each occurrence is 3 digits length, leading '0' (zero) included
Please contact your Sales representative for valid product features codes.

Note 4052(2): This element is reserved for the account numbers associated to the corresponding product feature. All account numbers should be stored on this element without a separation sign. The format of each occurrence is 9 digits length.

SG2 LOC Segment – Terms of Delivery Location

Group	Occurrence	Usage	Description
SG2	**1**	**R**	**TOD-LOC**
Function: A group of segments to specify terms of delivery and related locations.			

Segment	Occurrence	Usage	Description	
LOC	**1**	**C**	**Terms of Delivery Place/Location Identifier**	**SG2**
Function: To specify terms of delivery or transport place/location.				

Element	Usage	Format	Element Name
3277	R	AN..3	Location Function Code Qualifier
C517	**R**		**LOCATION IDENTIFICATION**
3225	R	AN..25	Delivery or transport terms description code
1131	X	AN..17	Code list identification code
3055	X	AN..3	Code list responsible agency code
3224	C	AN..256	Name of the location

Example: LOC+1+SIN:::CHANGI AIRPORT SINGAPORE1'

Note 3277: Use ‘1’ – Place of terms of delivery.

SG3 RFF Segment – References

Group	Occurrence	Usage	Description
SG3	**999**	**C**	**RFF**
Function: A group of segments to specify a reference related to the party.			

Segment	Occurrence	Usage	Description	
RFF	**1**	**M**	**References**	**SG3**
Function: To identify a reference used by a party				

Element	Usage	Format	Element Name
C506	**M**		**REFERENCE**
1153	M	AN..3	Reference code qualifier
1154	R	AN..70	Reference identifier

Example: RFF+CU:1154345678'

Note: This segment may be used to record various reference numbers.

Note 1153: Use:
'ACL' - Bulk Shipment Reference
'CU' - Consignor/Shipper's reference
'FN' - Freight Bill number
'IBC' - Inbound center reference number
'LLR' - Load list reference
'OBC' - Outbound center reference number
'PRN' - Booking reference number
'DGC' – Dangerous goods Content ID related to the charge code provided in TOD segment.
For full list of Invoice Related Reference Types, refer to "DHL Express Integrated Solution Reference Information" (available from DHL Express on request)
Invoice related references are validated against Shipper OR Consignee Country Codes under SG11-NAD-3207.

Qualifier ACL is used for bulk shipments. Break Bulk (baby) shipments come from the same shipper, but can have different receivers. They are grouped to 1 Break Bulk shipment, to accommodate the customs Clearance of the "Bulk Shipment" only and not all of the associated "Baby Shipments". The baby shipments must have the Product code: Break bulk (BBE or BBX) assigned to it. The Break Bulk shipment travels under the standard Product code (like ESI or ESU). This Break Bulk shipment is just an aggregation of the "Baby shipments" and travels FOC (Free of Charge) over the network. It terminates after Customs clearance in the inbound country has taken place. For more information about Break Bulk Express, please contact your Sales Representative.

In order to have the mother shipment/piece checkpoint available for baby shipment the following need to be available in the manifest data:

1. Mother shipment and baby shipments need to be available in the manifest files.
2. Mother shipment need to have network product code 'P' or "H' and charge code 'YW'.

3. Linking between baby shipment and mother shipment need to be provided with Shipment reference type = ‘ACL’ and shipment reference = <Mother Shipment ID/ 6647324213>.
4. Linking between baby piece and mother piece need to be provided with Piece reference type = ‘ACL’ and piece reference = <Mother Piece ID/ JD012959879580000001>.

SG4 GOR Segment – Governmental Requirements

Group	Occurrence	Usage	Description
SG4	**1**	**C**	**GOR-SG5**
Function: A group of segments to identify customs and other governmental procedures and required documents.			

Segment	Occurrence	Usage	Description	
GOR	**1**	**M**	**Governmental Requirements**	**SG4**
Function: A segment to indicate applicable governmental procedures related to import, export and transport of the goods.				

Element	Usage	Format	Element Name
8323	M	AN..3	Transport Movement code

Example: GOR+1'

Note: Segment group 4 is used as flag to indicate shipment is due to customs clearance and to enable the usage of SG5. This segment has to be used only in combination with SG5 DOC.

Note 8323: Use '1' – Export
Use '2' – Import

SG5 DOC Segment – Documents/Message Details

Group	Occurrence	Usage	Description	
SG5	**9**	**R**	**DOC-DTM**	**SG4**
Function: A group of segments to specify documents and associated date(s) and time(s) for a goods item.				

Segment	Occurrence	Usage	Description	
DOC	**1**	**M**	**Document Message Details**	**SG5**
Function: To specify contract and carriage conditions and service and priority requirements for the transport.				

Element	Usage	Format	Element Name
C002	**M**		**DOCUMENT / MESSAGE NAME**
1001	R	AN..3	Document name code
C503	**R**		**DOCUMENT MESSAGE DETAILS**
1004	R	AN..35	Document identifier

Example: DOC+821+12345678’

Note: This segment is only to be used for identifying export-documents for dutiable shipments, for customs clearance.

Note 1001: Use of this element is to indicate the type of main invoice document and its associated documents:
Main Document code - Document type
‘935’ - Customs invoice
‘380’ – Commercial Invoice
‘325’ – Proforma Invoice
Associated Documents – Document Type
For the full list of Associated Document Types, refer to "DHL Express Integrated Solution Reference Information" (available from DHL Express on request)

Note 1004: Related document number

SG5 DTM Segment – Date/Time/Period

Segment	Occurrence	Usage	Description	
DTM	**1**	**R**	**Date/Time/Period**	**SG5**
Function: A segment to specify the date/time related to the required document.				

Element	Usage	Format	Element Name
C507	**M**		**DATE/TIME/PERIOD**
2005	M	AN..3	Date/Time/Period function code qualifier
2380	R	AN..35	Date/Time/Period value
2379	R	AN..3	Date/Time/Period format code

Example: DTM+3:201606061110:203'

Note: This segment is used for specifying the document date/time.

Note 2005: Use:
'3' - Invoice date/time (Date)

Note 2380: With '3' in preceding element, this is the date/time when a Customs Invoice is issued.
The specified format is mandatory.

Note 2379: Use:
'203' for the date time mask CCYYMMDDHHMM

SG6 CPI Segment – Charge Payment Instructions

Group	Occurrence	Usage	Description
SG6	**1**	**C**	**CPI-MOA**
Function: A group of segments to indicate charge methodology which applies to the entire message.			

Segment	Occurrence	Usage	Description	
CPI	**1**	**M**	**Charge payment instructions**	**SG6**
Function: A segment to indicate default charge methodology.				

Element	Usage	Format	Element Name
C229	**X**		**CHARGE CATEGORY**
C231	**R**		**METHOD OF PAYMENT**
4215	M	AN..3	Transport charges payment method code

Example: CPI++PP’

Note: This segment contains charges. Used mainly when a shipment is paid by cash to specify payment method and the total charge paid.

Note 4215: Use:
‘A’ – Account. The charges are to be charged to a DHL customer account number.
‘CC’ – Collect. A shipment on which charges will be paid by consignee.
‘PP’ - Prepaid (by shipper). Shipper of goods makes payment to DHL for freight charges prior to shipment.

SG6 MOA Segment – Monetary Amount

Segment	Occurrence	Usage	Description	
MOA	**1**	**C**	**Monetary Amount**	**SG6**
Function: A segment to identify the monetary amount associated with the charges.				

Element	Usage	Format	Element Name
C516	**M**		**MONETARY AMOUNT**
5025	M	AN..3	Monetary amount type code qualifier
5004	R	N..35	Monetary amount
6345	R	AN..3	Currency identification code

Example: MOA+259:30,90:EUR’

Note: This segment is used to indicate charges of cash paid shipments.

Note 5025: Use:
‘259’ - Total charges

Note 5004: Rules for numeric value:

- The maximum number of digit is 18 where the 2 decimals are included.
- All amounts have to be specified with 2 decimals included, regardless currency.
- Decimal sign may be point or comma depending of what has been specified in segment UNA.

Note 6345: Currency codes are according to ISO 4217.

SG11 NAD Segment – Name and Address

Group	Occurrence	Usage	Description
SG11	**99**	**M**	**NAD-SG12-SG15**
Function: A group of segments to identify a party, related references, locations contacts, required documents, and charges to be paid by the party.			

Segment	Occurrence	Usage	Description	
NAD	**1**	**M**	**Name and Address**	**SG11**
Function: Specify Consignee/Receiver.				

Element	Usage	Format	Element Name
3035	M	AN..3	Party qualifier
C082	**C**		**PARTY IDENTIFICATION DETAILS**
3039	M	AN..17	Party identification
C058	**C**		**NAME AND ADDRESS**
3124	M	AN..35	Building name
3124	C	AN..35	City district
3124	C	AN..35	Address line 1
3124	C	AN..35	Address line 2
3124	C	AN..35	Address line 3
C080	**C**		**PARTY NAME**
3036	M	AN..35	Party Name
C059	**C**		**STREET**
3042	M	AN..35	Street name
3042	R	AN..35	Building number
3042	R	AN..35	House number
3164	C	AN..35	City name
C819	**C**		**COUNTRY SUB-ENTITY DETAILS**
3229	C	AN..2	State code
1131	X	AN..17	Code list identification code
3055	X	AN..3	Code list responsible agency code
3228	C	AN..35	Province
3251	C	AN..12	Postcode identification
3207	C	AN..2	Country, coded

Example: NAD+CN+++MICHEL VANHOREN SA+WOLUWELAAN::151+DIEGEM++1831+BE'
NAD+CZ+12345678'
NAD+JD+++MAXIM INTEGRATED PRODUCTS+HERMANN-KOEHL STRASSE::15+SCHKEUDITZ++04435+DE'

Note: The 1st and 2nd occurrences of SG11/NAD are mandatory, to indicate the Consignor/Shipper and Consignee/Receiver. Use qualifier 'CZ' resp. 'CN'.

JD used for LBBX purpose.
This address JD (Port of Entry) of Baby Shipment must be the same as Mother Shipment Receiver address because of possible DCVS label re-printing functionality

Note 3035: Use:
‘CN’ - Consignee/Receiver
‘CZ’ - Consignor/Shipper
‘EX’ - Exporter
‘FP’- Freight payer
‘IM’ - Importer
‘PW’ - Dispatch party
‘JD’ – Port of Entry (for LBBX - Baby Shipments only)
Qualifier ‘IV’ is not valid for International shipments.
For the full list of Role Types, refer to "DHL Express Integrated Solution Reference Information" (available from DHL Express on request)

Note 3039: This element contains the assigned account number of DHL. This is mandatory in combination with the qualifier ‘CZ’ in element 3035.

Note 3124:3-5: Address line 1-3 to be used only as supplementary information to the specific address fields. Specific address fields like Street name, City name, etc. have priority as they provide structured address that allows better label printing and are expected by DHL systems.

Note 3036: They contain the full name of the Shipper/Receiver party.

Note 3042: Use this element three times to specify street name, building number, house number and house number addition. However if for technical reason, it is not possible for the customer to split the address data, the street name, building number and house number may be concatenate in the first element 3042.

Note 3229: Use this for 2-char state code as defined in Format ISO 3166-2, e.g. TX.

Note 3251: Mandatory except for countries where no postcode system is available, e.g. Ireland.

Note 3207: Format ISO 3166-1 Alpha 2 country codes.

SG12 CTA Segment – Contact Information

Group	Occurrence	Usage	Description	
SG12	**1**	**C**	**CTA-COM**	**SG11**
Function: A group of segments identifying a contact and its communications related to the party.				

Segment	Occurrence	Usage	Description	
CTA	**1**	**M**	**Contact Information**	**SG12**
Function: To specify a person within a party.				

Element	Usage	Format	Element Name
3139	R	AN..3	Contact function code
C056	**R**		**DEPARTMENT OR EMPLOYEE DETAILS**
3413	X	AN..17	Department or employee name code
3039	R	AN..35	Department or employee name

Example: CTA+AC+:M. OLIVIER ABIDTS'

Note: This segment contains the 'for the attention of' information. The segment group is mandatory for product feature 'Delivery limited to receiver' because it holds the name of the person to whom delivery must be accomplished. This segment is to be used only to give the receiver contact name.

Note 3139: Use:
'AC' - Accepting contact. Use for product feature 'Delivery limited to receiver"; else use 'IC'.
'IC' - Contact information

SG12 COM Segment – Communication Contact

Segment	Occurrence	Usage	Description
COM	**1**	**C**	**Communication Contact** **SG12**
Function: To identify a communication number of a person or department to whom communication should be Directed.			

Element	Usage	Format	Element Name
C076	**M**		**COMMUNICATION CONTACT**
3148	M	AN..70	Communication address identifier
3155	M	AN..3	Communication address code qualifier

Example: COM+31 653 123 456:TE'
COM+?+31 653 123 456:FX'

Note: This segment is used to indicate a communication contact with the Consignee/Receiver for pre-notifying about a to-be delivered shipment or to inform of a to-be collected shipment. This segment has to be used to give additional information on the specified contact given in the previous CTA segment.

Note 3148: If the phone number is beginning with the '+' sign, the '?' release character should come immediately before the '+' sign in order to avoid translation problem.

Note 3155: Use:
'EM' - Electronic mail
'FX' - Telefax
'TE' - Telephone
'AL' - Cellular phone (mobile)

SG15 RFF Segment – References

Group	Occurrence	Usage	Description	
SG15	**1**	**C**	**RFF**	**SG11**
Function: A group of segments to specify a reference related to the party.				

Segment	Occurrence	Usage	Description	
RFF	**1**	**M**	**References**	**SG15**
Function: To identify a reference, in this case the VAT number, used by a party.				

Element	Usage	Format	Element Name
C506	**M**		**REFERENCE**
1153	M	AN..3	Reference code qualifier
1154	R	AN..35	Reference identifier
1156	R	AN..2	Document line identifier

Example: RFF+VA:BE12345678:BE'
RFF+DA:DAN123456IP1XXXXXXXXXXXXXXXXXXXXXXXXXE:DK'

Note: This segment may be used to record the different Registration numbers of the different role types, refer to "DHL Express Integrated Solution Reference Information" (available from DHL Express on request)
For example, VAT number of the Consignee/Receiver and Consignor/Shipper may be required for customs clearance of shipments, where the SG15 must follow immediately the SG11 NAD with qualifier 'CZ' or 'CN' depending on if the VAT number is related to the Consignor/Shipper or to the Consignee/Receiver. If SG12 is used to specify the contact information related to the 'CN' party, the SG15 RFF will follow immediately the Segment group 12.
Values are validated against role types under the DHL equivalent values of SG11-NAD-3035.

Note 1153: For the full list of possible Registration Number Types for different role types/ country combinations refer to "DHL Express Integrated Solution Reference Information" (available from DHL Express on request).
Examples include:
'VA' – VAT Registration Number
'ZZZ' – Overseas Registered Supplier Reference No., for example where it is required with low value shipments to Singapore (see also SG-18 FTX)

Note 1154: Actual registration number. Only 35 characters will be accepted by DHL.

Note 1156: ISO 3166-1 Alpha 2 country code format

SG17 TSR Segment – Transport Service Requirements

Group	Occurrence	Usage	Description
SG17	**1**	**C**	**TSR-FTX**
Function: A group of segments to specify a transport service requirement and its associated details (such as business party trader type) related to the party			

Segment	Occurrence	Usage	Description	
TSR	**1**	**M**	**Transport Service Requirements**	**SG17**
Function: A segment to specify a required service for the transport				

Element	Usage	Format	Element Name
C536	**X**		**CONTRACT AND CARRIAGE CONDITION**
C233	**X**		**SERVICE**
C537	**X**		**TRANSPORT PRIORITY**
4219	X	AN..3	Transport service priority code

Example: TSR’

SG17 FTX Segment – Free Text

Segment	Occurrence	Usage	Description
FTX	**1**	**C**	**Free Text** **SG17**
Function: A segment to provide any additional information related to the service requirement (Business Party Trader Type)			

Element	Usage	Format	Element Name
4451	R	AN..3	Text Subject Code Qualifier
4453	X	AN..3	Free Text Function Code
C107	**X**		**TEXT REFERENCE**
C108	**R**		**TEXT LITERAL**
4440	R	AN..20	Business Party Trader Type

Example: FTX+AAI+++Business'

Note 4451: For Reason for Export use 'AAI', mandatory for all shipments
For Duty Free Import Remark use "AAU' – may be used with Return shipments, see Appendix F

Note 4440: For the full list of Business Party Trader Types, refer to "DHL Express Integrated Solution Reference Information" (available from DHL Express on request)

Piece Details SG18 GID Segment – Goods Item Details

Group	Occurrence	Usage	Description
SG18	**999**	**R**	**GID-FTX-SG20-SG21-SG23-SG24**
Function: A group of segments to describe the goods items for which transport is undertaken.			

Segment	Occurrence	Usage	Description	
GID	**1**	**M**	**Goods Item Details**	**SG18**
Function: A segment to describe the goods items for which transport is undertaken.				

Element	Usage	Format	Element Name
1496	C	N..5	Goods item number
C213	**R**		**NUMBER AND TYPE OF PACKAGES**
7224	R	N..8	Package quantity
7065	R	AN..17	Package type description code

Example: GID++1:CT'

Example with weight and dimensions on shipment level.
GID+99999+2:CT'
MEA+WT+AAE+KGM:18'
PCI+18'
GIN+AW+J:VGL4502332243369101'
GID+99999+2:CT'
MEA+WT+AAE+KGM:18'
PCI+18'
GIN+-AW +J:VGL4502332243369102'

Example with weight and dimensions on piece level.
GID++1:CT'
MEA+WT+AAE+KGM:1'
DIM+2+CMT:10:10:10'
PCI+18'
GIN+-AW +J:VGL4502332243369101'
GID++1:CT'
MEA+WT+AAE+KGM:17'
DIM+2+CMT:20:10:15'
PCI+18'
GIN+-AW +J:VGL4502332243369102'

Note 1496: If data in SG20/MEA and SG21/DIM is not available on item level, the GID should be used as follows:
Element 1496 contains value 99999 and element 7224 contains the totals number of pieces in the shipment. The segment SG20 MEA and SG21 DIM will then contents the total volume.

Note 7224: The number of packages is always 1, since the following segments indicate items within one shipment.
BGM is on shipment level, within this group SG18, GID is on piece level. Since the GID group may occur 999 times, a shipment can contain up to 999 pieces.

Note 7065: For the list of package types, please consult your Sales Representative.

SG18 FTX Segment – Free Text

Segment	Occurrence	Usage	Description	
FTX	**2**	**C**	**Free Text**	**SG18**
Function: To specify description of goods.				

Element	Usage	Format	Element Name
4451	M	AN..3	Text Subject code qualifier
4453	X	AN..3	Free text function code
C107	**X**		**TEXT REFERENCE**
C108	**R**		**TEXT LITERAL**
4440	M	AN..256	Free text value

Example: FTX+AAA+++ELECTRONIC COMPONENTS'

Note 4451: Use 'AAA' – Goods description

Note 4440: Please take note that the goods description may be only once. If the goods description is given on piece level, the FTX segment on header level has to be omitted.

SG20 MEA Segment – Measurements

Group	Occurrence	Usage	Description	
SG20	**2**	**R**	**MEA**	**SG18**
Function: A group of segments to specify measurements applicable to a piece.				

Segment	Occurrence	Usage	Description	
MEA	**1**	**M**	**Measurements**	**SG20**
Function: Measurements of a piece.				

Element	Usage	Format	Element Name
6311	M	AN..3	Measurement application qualifier
C502	**R**		**MEASUREMENTS DETAILS**
6313	R	AN..3	Measured attribute code
C174	**R**		**VALUE / RANGE**
6411	M	AN..3	Measure unit qualifier
6314	R	N..18	Measurement value

Example: MEA+WT+AAE+KGM:12'
MEA+VOL+AAW+MTQ:45.000'

Note: The segment will occur twice. The first occurrence is reserved for the piece weight and the second for the piece volume.

Note 6311: Use:
'WT' – Weight
'VOL' - Volume

Note C108/4440: This segment with element 6311 = VOL, becomes mandatory if no dimensions of the piece are available.

Note 6313: Use:
'AAE' - Piece gross weight
'AAW' - Gross volume

Note 6411: Use:
'KGM' – Kilogram
'MTQ' - Cubic meter
'CMQ' - Cubic centimeter

Note 6314:
- The gross weight of the item is in kilograms with a maximum of 3 decimal. The volume is allowed with a maximum of 3 decimals.
- Decimal sign may be point or comma depending of what has been specified in segment UNA.

SG21 DIM Segment – Dimensions

Group	Occurrence	Usage	Description	
SG21	**1**	**M**	**DIM**	**SG18**
Function: A group of segments to specify dimensions applicable to a piece.				

Segment	Occurrence	Usage	Description	
DIM	**1**	**M**	**Dimensions**	**SG21**
Function: Measurements of a piece.				

Element	Usage	Format	Element Name
6145	M	AN..3	Dimensions type code qualifier
C211	**M**		**DIMENSIONS**
6411	M	AN..3	Measurement unit code
6168	R	N..15	Length dimension code
6140	R	N..15	Width dimension code
6008	R	N..15	Height dimension code

Example: DIM+2+CMT:10:10:10’

Note: This segment becomes mandatory if SG20 MEA+VOL is not used. See also SG20 MEA.
Note 6145: Use ‘2’ – Package dimensions
Note 6411: Use ‘CMT’ – Centimetres

SG22 RFF Segment – References

Group	Occurrence	Usage	Description	
SG22	**9**	**C**	**RFF**	**SG18**
Function: A group of segments to identify references to a goods item.				

Segment	Occurrence	Usage	Description	
RFF	**1**	**M**	**Reference**	**SG22**
Function: A segment to identify a reference to a goods item.				

Element	Usage	Format	Element Name
C506	**M**		**REFERENCE**
1153	M	AN..3	Reference code qualifier
1154	R	AN..70	Reference identifier

Example: RFF+ACL:JD012959879580000001’

Note: This segment may be used to record various piece references.

Note 1153: Use:
‘ACL’ - Bulk Shipment Reference
‘CU’ - Consignor/Shipper’s reference

Qualifier ACL is used for bulk shipments. Break Bulk (baby) shipments come from the same shipper, but can have different receivers. They are grouped to 1 Break Bulk shipment, to accommodate the customs Clearance of the “Bulk Shipment” only and not all of the associated “Baby Shipments”. The baby shipments must have the Product code: Break bulk (BBE or BBX) assigned to it. The Break Bulk shipment travels under the standard Product code (like ESI or ESU). This Break Bulk shipment is just an aggregation of the “Baby shipments” and travels FOC (Free of Charge) over the network. It terminates after Customs clearance in the inbound country has taken place. For more information about Break Bulk Express, please contact your Sales Representative.

In order to have the mother shipment/piece checkpoint available for baby shipment the following need to be available in the manifest data:

1. Mother shipment and baby shipments need to be available in the manifest files.
2. Mother shipment need to have network product code ‘P’ or “H’ and charge code ‘YW’.
3. Linking between baby shipment and mother shipment need to be provided with Shipment reference type = ‘ACL’ and shipment reference = <Mother Shipment ID/ 6647324213>.
4. Linking between baby piece and mother piece need to be provided with Piece reference type = ‘ACL’ and piece reference = <Mother Piece ID/ JD012959879580000001>.

SG23 PCI Segment – Package Identification

Group	Occurrence	Usage	Description	
SG23	**1**	**C**	**PCI-GIN**	**SG18**
Function: A group of segments to specify marks and numbers of a goods item.				

Segment	Occurrence	Usage	Description	
PCI	**1**	**M**	**Package identification**	**SG23**
Function: To specify marks and numbers of a good item.				

Element	Usage	Format	Element Name
4233	R	AN..3	Marking instructions, coded

Example: PCI+18’

Note 4233: Use ‘18’ – Carrier’s instructions

SG23 GIN Segment – Goods Identity Number

Segment	Occurrence	Usage	Description	
GIN	**1**	**R**	**Goods identity number**	**SG23**
Function: To give specific identification number.				

Element	Usage	Format	Element Name
7405	M	AN..3	Object identification code qualifier
C208	**M**		**IDENTIFY NUMBER RANGE**
7402	M	AN..35	Object identifier
7402	M	AN..35	Object identifier

Example: GIN+AW+J:VGL0858922671234563'
GIN+AW+00:357121231234567893'
GIN+AW+J:JD0030112708872040054737'

Note 7405: For DHL shipment items this is the License plate number. For qualifier 'AW', the range is provided by DHL. The license plate number should be the same as on the Global SOP label.
Use:
'AW' - Serial shipper container code - for items identifiable via the EAN128 SSCC. Use allowed for DHL Express Road shipments. Starting qualifier '00' is not part of the unique number.
'AW' - Transport unit identification according to ISO/IES 15459 - for DHL Express DD shipment items this is the CEN License plate. The number consists of a fixed part and a sequential part. The fixed part is provided by DHL Express DD. The sequential part is free for the customer to define. The whole number should be stored in the GIN segment (including the starting qualifier 'J').
'AW' - Indivisible transport unit identification according to ISO/IES 15459 - same as 'VZ', but indicating pallet units travelling under one unique item bar code.

Invoice Line Item Details

SG18 GID Segment – Goods Item Details

Group	Occurrence	Usage	Description
SG18	**999**	**R**	**GID-LOC-MOA-FTX-SG20-SG22-SG24-SG31**
Function: A group of segments to describe the goods items for which transport is undertaken.			

Segment	Occurrence	Usage	Description	
GID	**1**	**M**	**Goods Item Details**	**SG18**
Function: A segment to describe the goods items for which transport is undertaken.				

Element	Usage	Format	Element Name
1496	C	N..5	Goods item number
C213	**R**		**NUMBER AND TYPE OF PACKAGES**
7224	R	N..8	Package quantity
7065	X	AN..17	Package type description code

Example: GID++1:CT'

Example with weight and value on shipment level for multiple invoices:

GID+99999+1:PK'
MOA+43:400.00:EUR'
MOA+157:600:EUR'
MEA+WT+AAE+KGM:13.3067'
MEA+VOL+AAW+MTQ:0.318'
PCI+18'
GIN+AW+00:340112310464786534'

Note 1496: If there are multiple invoices on each shipment, the GID should be used as follows: Element 1496 contains value 99999 and element 7224 contains the totals number of pieces in the shipment. The segment SG20 MEA will contain the total weight. The segment MOA will contain the total shipment value for the number of invoices for each shipment.
For invoice related details, FTX+LIN is expected within GID segment. Element 1496 will be mandatory to indicate the line item number within the invoice.

Note 7224: The number of packages is always 1, since the following segments indicate items within one shipment.
BGM is on shipment level, within this group SG18, GID is on piece OR line item level. Since the GID group may occur 999 times (This is in combination between Piece ID and Line Item Details)

SG18 LOC Segment – Place/Location Identifier

Segment	Occurrence	Usage	Description
LOC	**1**	**C**	**PLACE/LOCATION IDENTIFIER**
Function: To specify a country associated with the goods item (country of origin)			

Element	Usage	Format	Element Name
3327	M	AN..3	Location function code qualifier
C517	**R**		**LOCATION IDENTIFICATION**
3325	M	AN..25	Location Name Code

Example: LOC+27+SG'

Note: This is mandatory for line item details
Note 3327: Use ‘27’ – Country of origin
Note 4440: Please use 2 letter ISO 3166 Code country code.

SG18 MOA Segment – Monetary Amount

Segment	Occurrence	Usage	Description
MOA	**9**	**C**	**MONETARY AMOUNT**
Function: To specify monetary amount associated with the goods item (line item total customs value, single article customs value)			

Element	Usage	Format	Element Name
C516	**R**		**MONETARY AMOUNT**
5025	M	AN..3	Monetary amount type qualifier
5004	C	N..18	Monetary amount
6345	C	AN..3	Currency identification code

Example: MOA+39:50.00:EUR'

Note: This is mandatory for line item details.

Note 5025: Use ‘39’ or ‘38’ – Total customs value (includes charges) per goods item
Use 146 – Single item customs value
For full list of Line Item Monetary Amounts, refer to "DHL Express Integrated Solution Reference Information" (available from DHL Express on request)

Note 5004: The format will be 18 digits with 3 decimal values included.

Note 6345: Please use 3 letter ISO 4217 currency code.

SG18 FTX Segment – Free Text

Segment	Occurrence	Usage	Description	
FTX	**2**	**C**	**Free Text**	**SG18**
Function: To specify description of goods.				

Element	Usage	Format	Element Name
4451	M	AN..3	Text Subject code qualifier
4453	X	AN..3	Free text function code
C107	**X**		**TEXT REFERENCE**
C108	**R**		**TEXT LITERAL**
4440	M	AN..256	Free text value

Example:
FTX+AAA+++ELECTRONIC COMPONENTS’
FTX+LIN'
FTX+Y'

Note 4451:
This segment is mandatory to indicate line item details.
Use ‘AAA’ – Goods description
Use ‘LIN’ – To indicate that line item invoice details are provided.
For low value shipments to Singapore Y or N must be given in SG50 within the GID segment - this is to indicate whether GST on the shipment contents has been paid in the exporting country already (Y = yes) or not (N = no), (see also SG-15 RFF)
Examples:
FTX+Y'
FTX+N'
Each line item should have such a GST flag/ indicator.

Note 4440:
Contains Goods Description. Please take note that the goods description may be only once for a line item.

SG20 MEA Segment – Measurements

Group	Occurrence	Usage	Description	
SG20	**2**	**R**	**MEA**	**SG18**
Function: A group of segments to specify measurements applicable to a piece.				

Segment	Occurrence	Usage	Description	
MEA	**1**	**M**	**Measurements**	**SG20**
Function: Measurements of a piece.				

Element	Usage	Format	Element Name
6311	M	AN..3	Measurement application qualifier
C502	**R**		**MEASUREMENTS DETAILS**
6313	R	AN..3	Measured attribute code
C174	**R**		**VALUE / RANGE**
6411	M	AN..3	Measure unit qualifier
6314	R	N..15	Measurement value

Example: MEA+AAF+AAF+KGM:1.2567'
MEA+AAF+AAE+KGM:2.2567'

Note: The segment will occur twice.
For Line Item details, the first occurrence is reserved for line item net weight and the second for line item gross weight.

Note 6311: Use:
'AAF' – Customs line item measurement

Note 6313: Use:
'AAE' – Line Item gross weight
'AAF' – Line Item net weight

Note 6411: Use:
'KGM' – Kilogram

Note 6314:
- The gross weight of the item is in kilograms with a maximum of 15 digits including 3 decimals. The volume is allowed with a maximum of 3 decimals.
- Decimal sign may be point or comma depending of what has been specified in segment UNA.

SG22 RFF Segment – References

Group	Occurrence	Usage	Description	
SG22	**9**	**C**	**RFF**	**SG18**
Function: A group of segments to identify references to a goods item.				

Segment	Occurrence	Usage	Description	
RFF	**1**	**M**	**Reference**	**SG22**
Function: A segment to identify a reference to a goods item.				

Element	Usage	Format	Element Name
C506	**M**		**REFERENCE**
1153	M	AN..3	Reference code qualifier
1154	R	AN..70	Reference identifier

Example: RFF+MF:PARTNUMBER123’

Note: This segment may be used to record various line item references.
Values are validated against Shipper OR Consignee Country Codes under SG11-NAD-3207.

Note 1153: Use the following for Line Item References. At least the commodity code must be provided for line item details.
‘MF’ – Part Number
‘HS’ – Commodity Code
For a full list of Invoice Line Item References, refer to "DHL Express Integrated Solution Reference Information" (available from DHL Express on request)

SG24 DOC Segment – Document/Message Details

Group	Occurrence	Usage	Description	
SG24	**9**	**C**	**DOC**	**SG24**
Function: A group of segments to specify documents and associated date(s) and time(s) for a goods item.				

Segment	Occurrence	Usage	Description	
DOC	**1**	**M**	**Document/Message Details**	**SG24**
Function: To provide the associated documents related to the goods item.				

Element	Usage	Format	Element Name
C002	**M**		**Document/Message Name**
1001	C	AN..3	Document Name Code
C503	**C**		**Document/Message Details**
1004	C	AN..35	Document identifier

Example: DOC+585+S1_I1_L1_972_DOCUMENT12EXXXXXXXXXXZ'
DOC+861+S1_I1_L1_COO_DOCUMENT12EXXXXXXXXXXZ'

Note 1001: For the list of Associated Document Types, refer to "DHL Express Integrated Solution Reference Information" (available from DHL Express on request)

SG31 TCC Segment – Charge/Rate Calculation Details

Group	Occurrence	Usage	Description	
SG31	**1**	**R**	**TCC-QTY**	**SG31**
Function: A group of segments to specify charge associated with the goods item (quantity).				

Segment	Occurrence	Usage	Description	
TCC	**1**	**M**	**Charge/Rate Calculations**	**SG31**
Function: To provide the charges related to the goods item.				

Element	Usage	Format	Element Name
C200	**C**		**Charge**
8023	C	AN..17	Freight/other charges description identifier

Example: TCC+DHL'

Note: This is mandatory for line item details.
Note 8023: Use ‘DHL’

SG31 QTY Segment – Quantity

Segment	Occurrence	Usage	Description	
QTY	**1**	**M**	**QUANTITY**	**SG31**
Function: To provide the quantity related to the goods item.				

Element	Usage	Format	Element Name
C186	**C**		**Quantity Details**
6063	M	AN..3	Quantity type code qualifier
6060	M	AN..35	Quantity value
6411	C	AN..3	Measurement unit code

Example: QTY+47:1:EA'

Note: This is mandatory for line item details.
Note 6063: Use ‘47’ – Invoiced quantity per goods item.

UNT Segment – Message Trailer

Segment	Occurrence	Usage	Description
UNT	**1**	**M**	**Message trailer**
Function: To end and check the completeness of a message.			

Element	Usage	Format	Element Name
0074	M	N..6	Number of segments in a message
0062	M	AN..14	Message reference number

Example: UNT+22+123'

Note 0074: Number of segments in the message (UNH to UNT).
Note 0062: The value shall be identical to the value in element 0062 in the corresponding UNH segment.

Appendix A - Product Type

Product group description	Global product name	Global product content code	Global product code	Global product description
Time Definite International	B2C	BTC	2	A systemized, international door-to-door delivery of **document** shipments within Time Definite transit times, targeted at business-to-consumer internet retailing
	B2C	B2C	3	A systemized, international door-to-door delivery of **non-document** shipments within Time Definite transit times, targeted at business-to-consumer internet retailing
	EXPRESS EASY	XEP	8	Systemized export or domestic pre-18:00hrs door-to-door delivery of **non-document** shipments on the next possible business day. Sold from Service Point outlets on cash payment terms, with DHL branded packaging included at eight standard weight intervals.
	EXPRESS WORLDWIDE	DOX	D	Systemized export or import pre-18:00hrs door-to-door delivery of **document** shipments on the next possible business day.
	EXPRESS 9:00	TDE	E	Systemized export, import or domestic pre-9:00hrs door-to-door delivery of **non-document** shipments on the next possible business day, with a full money-back guarantee and proactive delivery notification.
	BREAK BULK EXPRESS	BBX	B	A systemized door-to-door pick-up of an already consolidated shipment sent from one customs zone to another, with a consolidated clearance at the destination gateway and subsequent delivery of individual shipments to different receivers on the next possible business day.
	EXPRESS WORLDWIDE	ECX	U	Systemized export or import pre-18:00hrs door-to-door delivery of **document** shipments on the next possible business day.
Time Definite International	EXPRESS 12:00	TDY	Y	Systemized export, import or domestic pre-12:00hrs door-to-door delivery of **non-document** shipments on the next possible business day, with a full money-back guarantee.

	JUMBO BOX	JBX	J	A packaging-based product sold with a bundled pricing approach, with a pick-up from a Shipper's premises, and an international export delivery of **non-document** shipments by the end of the next possible business day.
	EXPRESS 10:30	TDM	M	Systemized export, import or domestic pre-10:30hrs door-to-door delivery of **non-document** shipments on the next possible business day, with a full money-back guarantee.
	EXPRESS WORLDWIDE	WPX	P	Systemized export or import pre-18:00hrs door-to-door delivery of **non-document** shipments on the next possible business day.
	MEDICAL EXPRESS	WMX	Q	The outbound transportation of time sensitive **supplies** and **medicines** and the associated inbound transportation of time sensitive **diagnostic samples** during the clinical trials phase of a new medicine (sent as **non-document**).
	GLOBALMAIL BUSINESS	GMB	R	Distribution of non-sorted **business correspondence** via international postal networks such as DPWN, with a pick-up by a DHL Express courier.
Time Definite Domestic	DOMESTIC EXPRESS 9:00	DOK	I	A systemized and guaranteed door-to-door pick-up and domestic delivery of **documents** and **parcels** on the next possible business day by 9:00hrs, targeted at time-critical business-to-business needs.
	DOMESTIC EXPRESS 12:00	DOT	1	A systemized and guaranteed door-to-door pick-up and domestic delivery of **documents** and **parcels** on the next possible business day by 12:00hrs, targeted at time-critical business-to-business needs.
	DOMESTIC EXPRESS	DOM	N	Systemized door-to-door delivery of **documents** and **parcels** within the same country on the next possible business day.
	DOMESTIC EXPRESS 10:30	DOL	O	A systemized and guaranteed door-to-door pick-up and domestic delivery of **document** and **parcel shipments** on the next possible business day by 10:30hrs, targeted at time-critical business-to-business needs

Time Definite International and Domestic	EXPRESS 9:00	TDK	K	Systemized export, import or domestic pre-9:00hrs door-to-door delivery of **document** shipments on the next possible business day, with a full money-back guarantee and proactive delivery notification.
	EXPRESS 10:30	TDL	L	Systemized export, import or domestic pre-10:30hrs door-to-door delivery of **document** shipments on the next possible business day, with a full money-back guarantee.
	EXPRESS 12:00	TDT	T	Systemized export, import or domestic pre-12:00hrs door-to-door delivery of **document** shipments on the next possible business day, with a full money-back guarantee.
	MEDICAL EXPRESS	CMX	C	The outbound transportation of time sensitive **supplies** and **medicines** and the associated inbound transportation of time sensitive **diagnostic samples** during the clinical trials phase of a new medicine (sent as **documents**).
	EXPRESS EASY	XED	7	Systemized export or domestic pre-18:00hrs door-to-door delivery of **document** shipments on the next possible business day. Sold from Service Point outlets on cash payment terms, with DHL branded packaging included at eight standard weight intervals.
	EXPRESS ENVELOPE	XPD	X	Systemized export pre-18:00hrs door-to-door delivery of **document** shipments weighing up to 250g on the next possible business day, within a DHL envelope designed and branded for the purpose.
Day Definite International	ECONOMY SELECT	ESI	H	Systemized door-to-door export or import delivery of **single** or **multi-piece shipments** and **pallets** with transit times quoted in a certain number of days.
	BREAK BULK ECONOMY	BBE	I	The same approach as for the Time Definite solution, only with the individual shipments delivered to Day Definite transit times. To be developed and deployed during 2009 using the DHL ECONOMY SELECT platform.

	EUROPACK	EPP	V	Systemized door-to-door export or domestic delivery of **single piece shipments** weighing up to 31.5kg for customers in certain countries sending within Europe, with transit times quoted in a certain number of days.
	ECONOMY SELECT	ESU	W	Systemized door-to-door export or import delivery of **single** or **multi-piece document shipments** and pallets with transit times quoted in a certain number of days.
Day Definite International and Domestic	EUROPACK	EPA	9	Systemized door-to-door export or domestic delivery of **single piece shipments** weighing up to 31.5kg for customers in certain countries sending within Europe, with transit times quoted in a certain number of days.
Day Definite Domestic	DOMESTIC ECONOMY SELECT	DES	G	Systemized door-to-door domestic delivery of **single** or **multi-piece shipments** and **pallets** with transit times quoted in a certain number of days.
Same Day (International and Domestic)	JETLINE	NFO	4	A fully flexible service with an immediate pick-up and an export or domestic door-to-door **dedicated delivery** by way of the next **commercial** or **network flight** out, within a target of 24 hours.
	SPRINTLINE	SPL	5	A fully flexible service with an immediate pick-up and an export or domestic door-to-door delivery by way of a **dedicated ground vehicle**, within a target of 24 hours.
	SECURELINE	OBC	6	A fully flexible service with an immediate pick-up and an export or domestic door-to-door delivery by way of an **on-board courier** or **chartered aircraft** for the highest level of security, within a target of 24 hours.
	SAME DAY	SDX	S	Scheduled door-to-door pick-up generally before noon and an export or domestic delivery to limited destinations within the very same business day. At times limited to **document** shipment only.

Appendix B – Product Features

Feature Group	Feature name	DHL Feature ID	EDI Feature ID	Feature description
Shipment Preparation (Advance Shipment)	Data staging 03	PT	803	On contractual agreement with the Shipper, pre-printed waybills for the management of his return second leg shipments are created via one of the available eCom tools that offers a pre-print functionality for Global SOP approved eCom Labels. Data Staging will ensure that the complete set of shipment details entered into the eCom tool will be stored until the waybill /label is actually used within **3 months**.
	Data staging 06	PU	806	On contractual agreement with the Shipper, pre-printed waybills for the management of his return second leg shipments are created via one of the available eCom tools that offers a pre-print functionality for Global SOP approved eCom Labels. Data Staging will ensure that the complete set of shipment details entered into the eCom tool will be stored until the waybill /label is actually used within **6 months**.
	Data staging 12	PV	812	On contractual agreement with the Shipper, pre-printed waybills for the management of his return second leg shipments are created via one of the available eCom tools that offers a pre-print functionality for Global SOP approved eCom Labels. Data Staging will ensure that the complete set of shipment details entered into the eCom tool will be stored until the waybill /label is actually used within **12 months.**
	Data staging 24	PW	824	On contractual agreement with the Shipper, pre-printed waybills for the management of his return second leg shipments are created via one of the available eCom tools that offers a pre-print functionality for Global SOP approved eCom Labels. Data Staging will ensure that the complete set of shipment details entered into the eCom tool will be stored until the waybill /label is actually used within **24 months.**
Weekends & Holidays	Saturday Delivery	AA	050	At Shipper's request, the international delivery of a shipment/piece on a Saturday, to selected postal/zip code areas that have the capability, in countries where Saturday is not a normal working day. For more information about this service and availability, please contact your Sales representative.

Insurance Services	Supplementary Insurance	II	101	At Shipper's request, the provision at individual shipment level, of declared value coverage above Standard Liability, for the amount necessary to repair or replace a shipment/piece in the event of physical loss or damage. Called Shipment Value Protection in the US/CA. For more information about this service and availability, please contact your Sales representative.
Billing Instructions	Cash on Delivery	KB	100	By contractual agreement with the Shipper, the delivery of a shipment/piece only against payment of the goods value indicated by the Shipper on the waybill (below a certain maximum amount). Procedures and means of payment to the Courier depend on local conditions and practices (cash, bank guaranteed cheques, or credit card). Available only with domestic products. Only a Shipper with an account and who contractually guarantees the amount of such shipments can use this service. For more information about this service and availability, please contact your Sales representative.
	Importer of Record	DU	220	At Shipper's request, the use of a feature code to support the payment process when the Importer of Record is different from the shipment Receiver.
Y- Non Standard Shipments	Loose Bulk Mother	YM	230	indicates loose break bulk shipment (virtual mother)
	Loose Bulk Baby	YZ	231	Indicate loose bulk baby shipment.

D-Billing Services	Importer of Record	DU	220	At Shipper's request, the use of a feature code to support the payment process when the Importer of Record is different from the shipment Receiver.

Appendix C - Example File

```
UNA:+.? '
UNB+UNOC:4+964857636.85551+3D_MESSAGE_HUB+160916:0800+A8373416402'
UNH+8373416402+IFTMIN:D:01B:UN+DP2.1/PPCAL'
BGM+740+8373416402+9'
DTM+9:201609161535:203'
DTM+11:201609161535:203'
TSR+++WPX:57:87'
FTX+AAA+++RTO SHIPMENT CLOTHING/SHOES-EXPORT AWB: 8373416402'
CNT+7:3.5:KGM'
CNT+11:1'
CNT+15:0.057375:MTQ'
LOC+5+BSL'
LOC+8+MUC'
TOD+6+A+DDU:::220:ACC123456'
RFF+CU:ERS00064261'
NAD+CZ+964857636++Claudia Weekie+Winzigen10 +Luzern++6014+CH'
CTA+AC+:N/A'
COM+555555555:TE'
NAD+CN+++myt+Ammerstrasse 420+Kirchheim-Heimstetten++85551+DE'
CTA+AC+:Carsten Roesen'
COM+5555555555:TE'
GID++1:CT'
MEA+WT+AAE+KGM:3.5'
DIM+2+CMT:51:45:25'
PCI+18'
GIN+AW+J:JD000390006199502190'
UNT+26+8373416402'
UNZ+1+A8373416402'
```

Appendix D – Message structure and content for Loose BBX shipments and Sample Message

Break Bulk Express (BBX) is a DHL Express service which streamlines destination Customs procedures, minimizing Customs lodgement fees charged. It includes the submission of shipment data records for a “Mother” shipment and a number of corresponding “Baby” shipments.
Consolidated BBX is where the Baby shipments are packed together, e.g. on pallets, forming a smaller number of pieces of the Mother shipment (e.g. 1 pallet = 1 Mother shipment piece)
Loose BBX is where the BBX service is used but shipments are not packed together (e.g. not palletized).

No.	Requirement	Location in Message
Applied to both Mother shipment record and Baby shipment records		
1*	Records for Baby shipments and their corresponding Mother shipment must be submitted together in one IFCSUM file	-
2	Shipper Account given in SG4 - NAD segment (therefore applied to all shipment records in file) with CZ qualifier, but not in Payer Account (see point 6)	SG 11 – NAD
Against Mother Shipment		
3	DHL Product Code likely WPX (confirm with DHL Express) As TSR+++WPX:57:87'	TSR
4	Dutiable shipment, therefore must include Declared Total Customs Value As MOA+43:x:yyy' where x is numeric value to 2 decimal places and yyy is three letter currency code	MOA
5*	Service Code 230 given, as TOD+6++DDU:::230' *(where DDU is Terms of Trade of shipment)*	SG 2 – TOD
6	Payer Account is FOC (free of charge) account. Exact value must be confirmed with DHL Express in the shipping country - will likely consist of 9 alpha characters including a pre-fix of FOC As NAD+FP+FOCXXXXXX', where FOCXXXXXX is payer account	SG 11 – NAD
7	Receiver Name contains Company Name of Importer of Record c/o DHL Express. Receiver Contact Name and details, and Receiver address details given for DHL facility at point of entry into destination country (confirm details with DHL Express)	SG 11 – NAD
8*	Piece records against each Baby shipment also given against Mother shipment i.e. Piece IDs shared *(therefore No. of Mother Shipment Pieces = Sum of Shipment Pieces across all Baby Pieces)*	SG 18 – GID
Against Baby Shipment		
9*	No. of Mother shipment pieces (so sum of all corresponding Baby shipment pieces) given against each Baby Shipment As CNT+56:x’ where x is no. of Mother shipment pieces	CNT
10	Has DHL Product Code BBX, as TSR+++BBX:57:87'	TSR
11*	Service Code 231 given, as TOD+6+++:::231'	SG 2 – TOD
12	Corresponding Mother Shipment AWB no. given as Shipper Reference with ACL Qualifier As RFF+ACL:9999999999' where 9999999999 is Mother AWB no.	SG 3 – RFF
13*	Mother shipment Receiver Address and Contact Details given as Port of Entry Address and Contact Details, in NAD segment with JD qualifier with corresponding CTA and COM segments. Given after Consignee address (NAD+CN and corresponding LOC, CTA and COM segments)	SG 11 – NAD
14	Customer’s account given in Payer Account	SG 11 – NAD
15	Receiver Contact and Address details given for end receiver of Baby shipment	SG 11 – NAD

*Requirement of Loose BBX but not of Consolidated BBX
Consolidated BBX requires the Mother Piece ID in which a Baby shipment piece is packed to be given as a Piece Reference against that Baby shipment piece with Reference Type ACL – this is NOT required in Loose BBX
Also different Service Codes are given to indicate Mother and Baby shipments with Consolidated BBX

Example Loose BBX Message

```
UNA:+.? '
UNB+UNOC:4+CIT+DHLEUAPGW+200303:1438+1298'
UNH+1+IFTMIN:D:01B:UN+GM2/DCGFW4.6'
BGM+785+3332220001+9'
DTM+9:202003030826:203'
DTM+11:202003030826:203'
TSR+++WPX:57:87'
MOA+43:4475.43:EUR'
MOA+157:4475.43:EUR'
MOA+22:4475.43:EUR'
MOA+124:200:EUR'
MOA+39:888.8:EUR'
FTX+AAA+++ELECTRICAL PARTS'
FTX+DIN+++FOR TESTING PARTS ONLY'
CNT+7:2.1:KGM'
CNT+11:6'
CNT+15:0.6:MTQ'
TOD+6++DDP:::230'
RFF+CU:CUSTREFMOTHER001'
GOR+1'
DOC+821+12345678'
DTM+3:202001021500:203'
NAD+CZ+555777888++DISPLAY MANUFACTURER+8 Fengming 4th St+Dongguan++523757+CN'
CTA+CO+:CO-DISPLAY MAN'
CTA+IC+:CI-DISPLAY MAN'
COM+86 769 5566 5568:TE'
COM+86 769 5566 9999:FX'
COM+IFCSUM_Sender@email.com:EM'
COM+86 769 5566 7777:AL'
NAD+CN+++DISPLAY MAN CUSTOMS+HERMANN-KOEHL-STRASSE 1+SCHKEUDITZ++04435+DE'
LOC+8+LEJ'
CTA+AC+:DISPMANCUST REP'
COM+49-341-44995866:TE'
CTA+IC+:C/O DHL EXPRESS LEIPZIG HUB'
COM+31 222 222 222:FX'
COM+receiver_one@email.com:EM'
COM+99 999 999 999:AL'
GID++1:CT'
FTX+AAA+++ELECTRONIC COMPONENTS'
MEA+WT+AAE+KGM:0.1'
MEA+VOL+AAW+MTQ:0.001'
DIM+2+CMT:10:10:10'
RFF+CU:LBBXPC001'
PCI+18'
GIN+VZ+J:JD10120200114070859701'
GID++1:CT'
FTX+AAA+++ELECTRONIC COMPONENTS'
MEA+WT+AEE+KGM:0.2'
MEA+VOL+AAW+MTQ:0.001'
DIM+2+CMT:10:10:10'
PCI+18'
GIN+VZ+J:JD10120200114070859702'
```

```
GID++1:CT'
FTX+AAA+++ELECTRONIC COMPONENTS'
MEA+WT+AAE+KGM:0.3'
MEA+VOL+AAW+MTQ:0.001'
DIM+2+CMT:10:10:10'
PCI+18'
GIN+VZ+J:JD10120200114070859703'
GID++1:CT'
FTX+AAA+++ELECTRONIC COMPONENTS'
MEA+WT+AAE+KGM:0.3'
MEA+VOL+AAW+MTQ:0.001'
DIM+2+CMT:10:10:10'
PCI+18'
GIN+VZ+J:JD10120200114070859704'
GID++1:CT'
FTX+AAA+++ELECTRONIC COMPONENTS'
MEA+WT+AEE+KGM:0.5'
MEA+VOL+AAW+MTQ:0.001'
DIM+2+CMT:10:10:10'
PCI+18'
GIN+VZ+J:JD10120200114070859705'
GID++1:CT'
FTX+AAA+++ELECTRONIC COMPONENTS'
MEA+WT+AEE+KGM:0.6'
MEA+VOL+AAW+MTQ:0.001'
DIM+2+CMT:10:10:10'
PCI+18'
GIN+VZ+J:JD10120200114070859706'
UNT+71+1'
UNH+2+IFTMIN:D:01B:UN+GM2/DCGFW4.6'
BGM+785+5566550001+9'
DTM+9:202003030826:203'
DTM+11:202003030826:203'
TSR+++BBX:57:87'
MOA+43:1223.10:EUR'
MOA+157:1223.10:EUR'
FTX+AAA+++COMPUTER ACCESSORY'
CNT+7:0.3:KGM'
CNT+11:2'
CNT+15:0.2:MTQ'
CNT+56:6'
TOD+6++DDP:::231'
RFF+ACL:3332220001'
RFF+CU:CUSTREFBABY001'
GOR+1'
DOC+821+12345678'
DTM+3:202001021500:203'
NAD+CZ+555777888++DISPLAY MANUFACTURER+8 Fengming 4th St+Dongguan++523757+CN'
CTA+CO+:CO-DISPLAY MAN'
CTA+IC+:CI-DISPLAY MAN'
COM+86 769 5566 5568:TE'
COM+86 769 5566 9999:FX'
COM+IFCSUM_Sender@email.com:EM'
COM+86 769 5566 7777:AL'
```

```
NAD+CN+++SEDMICKA, A.S.+DLOUHA 33+PRAGUE++11000+CZ'
LOC+8+PRG::87'
CTA+AC+:KAREL JELEN'
COM+00 420 777 999 555:TE'
NAD+JD+++DISPLAY MAN CUSTOMS+HERMANN-KOEHL-STRASSE 1+SCHKEUDITZ++04435+DE'
CTA+AC+:DISPMANCUST REP'
COM+49-341-44995866:TE'
CTA+IC+:C/O DHL EXPRESS LEIPZIG HUB'
GID++1:CT'
MEA+WT+AAE+KGM:0.1'
MEA+VOL+AAW+MTQ:0.001'
DIM+2+CMT:10:10:10'
PCI+18'
GIN+VZ+J:JD10120200114070859701'
GID++1:CT'
MEA+WT+AEE+KGM:0.2'
MEA+VOL+AAW+MTQ:0.001'
DIM+2+CMT:10:10:10'
PCI+18'
GIN+VZ+J:JD10120200114070859702'
UNT+43+2'
UNH+3+IFTMIN:D:01B:UN+GM2/DCGFW4.6'
BGM+785+5566550002+9'
DTM+9:202003030826:203'
DTM+11:202003030826:203'
TSR+++BBX:57:87'
MOA+43:1524.33:EUR'
MOA+157:1524.33:EUR'
FTX+AAA+++COMPUTER ACCESSORY'
CNT+7:0.3:KGM'
CNT+11:1'
CNT+15:0.1:MTQ'
CNT+56:6'
TOD+6++DDP:::231'
RFF+ACL:3332220001'
RFF+CU:CUSTREFBABY002'
GOR+1'
DOC+821+12345678'
DTM+3:202001021500:203'
NAD+CZ+555777888++DISPLAY MANUFACTURER+8 Fengming 4th St+Dongguan++523757+CN'
CTA+CO+:CO-DISPLAY MAN'
CTA+IC+:CI-DISPLAY MAN'
COM+86 769 5566 5568:TE'
COM+86 769 5566 9999:FX'
COM+IFCSUM_Sender@email.com:EM'
COM+86 769 5566 7777:AL'
NAD+CN+++BIEDRONKA+SEPA-SZARZYNSKIEGO 84/1A+WROCLAW++50334+PL'
LOC+8+WRO::87'
CTA+AC+:KLAUS KINSKI'
COM+?+48 71 714 24 70:TE'
NAD+JD+++DISPLAY MAN CUSTOMS+HERMANN-KOEHL-STRASSE 1+SCHKEUDITZ++04435+DE'
CTA+AC+:DISPMANCUST REP'
COM+49-341-44995866:TE'
CTA+IC+:C/O DHL EXPRESS LEIPZIG HUB'
```

```
GID++1:CT'
MEA+WT+AAE+KGM:0.3'
MEA+VOL+AAW+MTQ:0.001'
DIM+2+CMT:10:10:10'
PCI+18'
GIN+VZ+J:JD10120200114070859703'
UNT+38+3'
UNH+4+IFTMIN:D:01B:UN+GM2/DCGFW4.6'
BGM+785+5566550003+9'
DTM+9:202003030826:203'
DTM+11:202003030826:203'
TSR+++BBX:57:87'
MOA+43:1728:EUR'
MOA+157:1728:EUR'
FTX+AAA+++COMPUTER ACCESSORY'
CNT+7:1.5:KGM'
CNT+11:3'
CNT+15:0.3:MTQ'
CNT+56:6'
TOD+6++DDP:::231'
RFF+ACL:3332220001'
RFF+CU:CUSTREFBABY003'
GOR+1'
DOC+821+12345678'
DTM+3:202001021500:203'
NAD+CZ+555777888++DISPLAY MANUFACTURER+8 Fengming 4th St+Dongguan++523757+CN'
CTA+CO+:CO-DISPLAY MAN'
CTA+IC+:CI-DISPLAY MAN'
COM+86 769 5566 5568:TE'
COM+86 769 5566 9999:FX'
COM+IFCSUM_Sender@email.com:EM'
COM+86 769 5566 7777:AL'
NAD+CN+++THERMOTECHNIKA+KOER UTCA 3+BUDAPEST++1103+HU'
LOC+8+BUD::87'
CTA+AC+:JANOSZ POHA'
COM+00 36 1 260 7126:TE'
NAD+JD+++DISPLAY MAN CUSTOMS+HERMANN-KOEHL-STRASSE 1+SCHKEUDITZ++04435+DE'
CTA+AC+:DISPMANCUST REP'
COM+49-341-44995866:TE'
CTA+IC+:C/O DHL EXPRESS LEIPZIG HUB'
GID++1:CT'
MEA+WT+AAE+KGM:0.4'
MEA+VOL+AAW+MTQ:0.001'
DIM+2+CMT:10:10:10'
PCI+18'
GIN+VZ+J:JD10120200114070859704'
GID++1:CT'
MEA+WT+AEE+KGM:0.5'
MEA+VOL+AAW+MTQ:0.001'
DIM+2+CMT:10:10:10'
PCI+18'
GIN+VZ+J:JD10120200114070859705'
GID++1:CT'
MEA+WT+AEE+KGM:0.6'
```

```
MEA+VOL+AAW+MTQ:0.001'
DIM+2+CMT:10:10:10'
PCI+18'
GIN+VZ+J:JD10120200114070859706'
UNT+50+4'
UNZ+4+1298'
```

Appendix E – Commercial Invoice data usage and sample message

Commercial Invoice information must be included in the message for shipments that require declaration to Customs, unless such data is sent to DHL Express by an agreed separate data flow.

If there will be multiple invoices in 1 shipment, each invoice as individual message UNH-UNT needs to be sent by the customer. The party addresses will be captured from the 1st invoice. If there are multiple invoice scenario, shipment level weight and customs value needs to be populated under GID+99999.

```
UNA:+.? '
UNB+UNOC:4+214996805.4144+3D_MESSAGE_HUB+20201201:1105+518'
UNH+1+IFTMIN:D:01B:UN+DHL2.5/ProLogis SendIT V5.0'
BGM+740+IBMRITSHPKEY+9'
DTM+9:202012011105:203'
DTM+11:202012011105:203'
DTM+63:202012051105:203'
DTM+64:202012021105:203'
TSR+++WPX:57:87'
MOA+43:250.00:EUR'
MOA+157:50.00:EUR'
MOA+22:30.00:EUR'
MOA+64:25.5:EUR'
MOA+79:144.5:EUR'
FTX+AAA+++SHIPMENT1_I1_Montageartikel'
FTX+HAN+++SHIPMENT1_I1_Special Handling Instructions'
FTX+CEX+++P'
FTX+AAI+++Commercial'
CNT+7:4.7567:KGM'
CNT+29:6.5067:KGM'
CNT+11:1'
CNT+15:0.059:MTQ'
LOC+5+SIN'
LOC+8+BSL'
TOD+6++DDU:::100'
LOC+1+SIN:::CHANGI AIRPORT SINGAPORE1'
RFF+SRN:0306082740'
RFF+CO:SH1_I1_COB0306082740XXXXXXXXXXXXXXXE'
RFF+CU:SH1_I1_CUN_0306082740XXXXXXXXXXXXXXXE'
RFF+MRN:SH1_I1_MRN_0306082740XXXXXXXXXXXXXXXE'
GOR+1'
DOC+380+SH1_I1_INV1234XXXXXXXXXXXXXXXXXXXXXXE'
DTM+3:202012011105:203'
DOC+39+SH1_I1_PAS1234XXXXXXXXXXXXXXXXXXXXXXE'
DOC+ABC+SH1_I1_ABC1234XXXXXXXXXXXXXXXXXXXXXXE'
NAD+CZ+610980949+SP1_Alfa Laval Tumba AB, SingaporeE:SP1_Warehouse 1 XXXXXXXXXXXXXXXXXXXE:SP1_11 Joo
Koon Circle, Jurong XXXE+SP1_Alfa Laval Tumba AB, SingaporeE+11 Joo Koon Circle, Jurong
XXXXXXXE+Singapore++629043+SG'
CTA+AC+:SP1_CONTACT NAME XXXXXXXXXXXXXXXXXE'
COM+SP1_TELEPHONE NUMBER XXXXXXXXXXXXXXXXXXXX
```

```
LOC+5+BSL'
LOC+8+BSL'
CTA+AC+:RV1_CONTACT NAME XXXXXXXXXXXXXXXXXE'
COM+RV1_TELEPHONE NUMBER XXXXXXXXXXXXXXXXX
```

```
MEA+WT+AAE+KGM:13.3067'
MEA+VOL+AAW+MTQ:0.318'
PCI+18'
GIN+AW+00:340112310464786534'
GID+1+1:EA'
LOC+27+SG'
MOA+39:50.00:EUR'
MOA+146:25.0000:EUR'
MOA+43:35.0000:EUR'
FTX+LIN'
FTX+AAA+++S1_I1_L1_DESCRIPTION OF GOODS
XXXXXXXXXXXXXXXXXXXXXXXXXXXXXXXXXXXXXXXXXXXXXXXXXXXXXXXXXXXXXXXXXXXXXXXXXXXXXXXXXXXXXXXX
XXXXXXXXXXXXXXXXXXXXXXXXXXXXXXXXXXXXXXXXXXXXXXXXXXXXXXXXXXXXXXXXXXXXXXXXXXXXXXXXXXXXXXXXX
XXXXXXXXXXXXXXXXXXXXXXXXXXXXXXXXXXXXXXXXXXXXXXXXXXXXXXXXXXXXXXXXXXXXXXXXXXXXXXXXXXXXXXXXX
XXXXXXXXXXXXXXXXXXXXXXXXXXXXXXXXXXXXXXXXXXXXXXXXXXXXXXXXXXXXXXXXXXXXXXXXXXXXXXXXXXXXXXXXX
XXXXXXXXXXXXXXXXXXXXXXXXXXXXXXXXXXXXXXXXXXXXXXXXXXXXXXXXXXXXXXXXXXXXXXXXXXXXXXXXXXXXXXXXX
XXXXXXXXXXXXXXXXXXXXXXXXXXXXXXXXZ'
MEA+AAF+AAF+KGM:1.2567'
MEA+AAF+AAE+KGM:2.2567'
RFF+HS:S1_I1_L1_EXP_CLASSIFICAEXXXXXXXXXXXXXXXXXXXXXXXXXXXXXXXXXXXXXXXXXXXXZ'
RFF+MF:S1_I1_L1_PART_NUMBER123EXXXXXXXXXXXXXXXXXXXXXXXXXXXXXXXXXXXXXXXXXXXXZ'
RFF+AFE:S1_I1_L1_ECCN_NUMBER123EXXXXXXXXXXXXXXXXXXXXXXXXXXXXXXXXXXXXXXXXXXXXZ'
RFF+ABW:S1_I1_L1_SKU1_NUMBER123EXXXXXXXXXXXXXXXXXXXXXXXXXXXXXXXXXXXXXXXXXXXXZ'
DOC+585+S1_I1_L1_972_DOCUMENT12EXXXXXXXXXXZ'
DOC+861+S1_I1_L1_COO_DOCUMENT12EXXXXXXXXXXZ'
DOC+ABC+S1_I1_L1_ABC_DOCUMENT12EXXXXXXXXXXZ'
TCC+DHL'
QTY+47:1:EA'
GID+2+1:EA'
LOC+27+CH'
MOA+38:94.50:EUR'
MOA+146:47.2500:EUR'
MOA+43:40.0000:EUR'
FTX+LIN'
FTX+AAA+++S1_I1_L2_DESCRIPTION OF GOODS
XXXXXXXXXXXXXXXXXXXXXXXXXXXXXXXXXXXXXXXXXXXXXXXXXXXXXXXXXXXXXXXXXXXXXXXXXXXXXXXXXXXXXXXX
XXXXXXXXXXXXXXXXXXXXXXXXXXXXXXXXXXXXXXXXXXXXXXXXXXXXXXXXXXXXXXXXXXXXXXXXXXXXXXXXXXXXXXXXX
XXXXXXXXXXXXXXXXXXXXXXXXXXXXXXXXXXXXXXXXXXXXXXXXXXXXXXXXXXXXXXXXXXXXXXXXXXXXXXXXXXXXXXXXX
XXXXXXXXXXXXXXXXXXXXXXXXXXXXXXXXXXXXXXXXXXXXXXXXXXXXXXXXXXXXXXXXXXXXXXXXXXXXXXXXXXXXXXXXX
XXXXXXXXXXXXXXXXXXXXXXXXXXXXXXXXXXXXXXXXXXXXXXXXXXXXXXXXXXXXXXXXXXXXXXXXXXXXXXXXXXXXXXXXX
XXXXXXXXXXXXXXXXXXXXXXXXXXXXXXXXZ'
MEA+AAF+AAF+KGM:3.5'
MEA+AAF+AAE+KGM:4.25'
```

```
RFF+HS:S1_I1_L2_EXP_CLASSIFICAEXXX
```

NAD+CN++.::RV1_Romanshornerstrasse 122+RV1_Würth AG:RV1_HWS
Kreuzlingen+Romanshornerstrasse::RV1_122+Kreuzlingen++8280+CH'
LOC+5+BSL'
LOC+8+BSL'
CTA+AC+:RV1_CONTACT NAME XXXXXXXXXXXXXXXXXE'
COM+RV1_TELEPHONE NUMBER XXXXXXXXXXXXXXXXXXXXXXXXXXXXXXXXXXXXXXXXXXXXXXXXXE:TE'
COM+RV1_MOBILE NUMBER
XXXXXXXXXXXXXXXXXXXX

```
FTX+AAI+++Other'
GID+99999+1:PK'
MOA+43:400.00:EUR'
MOA+157:600:EUR'
MEA+WT+AAE+KGM:13.3067'
MEA+VOL+AAW+MTQ:0.318'
PCI+18'
GIN+AW+00:140112310464786534'
GID+1+1:EA'
LOC+27+SG'
MOA+39:15.00:EUR'
MOA+146:15.0000:EUR'
MOA+43:4:EUR'
FTX+LIN'
FTX+AAA+++S1_I2_L1_DESCRIPTION OF GOODS
XXXXXXXXXXXXXXXXXXXXXXXXXXXXXXXXXXXXXXXXXXXXXXXXXXXXXXXXXXXXXXXXXXXXXXXXXXXXXXXXXXXXXXXXX
XXXXXXXXXXXXXXXXXXXXXXXXXXXXXXXXXXXXXXXXXXXXXXXXXXXXXXXXXXXXXXXXXXXXXXXXXXXXXXXXXXXXXXXXXX
XXXXXXXXXXXXXXXXXXXXXXXXXXXXXXXXXXXXXXXXXXXXXXXXXXXXXXXXXXXXXXXXXXXXXXXXXXXXXXXXXXXXXXXXXX
XXXXXXXXXXXXXXXXXXXXXXXXXXXXXXXXXXXXXXXXXXXXXXXXXXXXXXXXXXXXXXXXXXXXXXXXXXXXXXXXXXXXXXXXXX
XXXXXXXXXXXXXXXXXXXXXXXXXXXXXXXXXXXXXXXXXXXXXXXXXXXXXXXXXXXXXXXXXXXXXXXXXXXXXXXXXXXXXXXXXX
XXXXXXXXXXXXXXXXXXXXXXXXXXXXXXXXXXXXXXXXXXXXXXXXXXXXXXXXXXXXXXXXXXXXXXXXXXXXXXXXXXXXXXXXXX
XXXXXXXXXXXXXXXXXXXXXXXXXXXXXXXZ'
MEA+AAF+AAF+KGM:1.2567'
MEA+AAF+AAE+KGM:2.2567'
RFF+HS:S1_I2_L1_EXP_CLASSIFICAEXXXXXXXXXXXXXXXXXXXXXXXXXXXXXXXXXXXXXXXXXXXXXZ'
RFF+MF:S1_I2_L1_PART_NUMBER123EXXXXXXXXXXXXXXXXXXXXXXXXXXXXXXXXXXXXXXXXXXXXXZ'
RFF+AFE:S1_I2_L1_ECCN_NUMBER123EXXXXXXXXXXXXXXXXXXXXXXXXXXXXXXXXXXXXXXXXXXXXXZ'
RFF+ABW:S1_I2_L1_SKU1_NUMBER123EXXXXXXXXXXXXXXXXXXXXXXXXXXXXXXXXXXXXXXXXXXXXXZ'
DOC+585+S1_I2_L1_972_DOCUMENT12EXXXXXXXXXXZ'
DOC+861+S1_I2_L1_COO_DOCUMENT12EXXXXXXXXXXZ'
DOC+ABC+S1_I2_L1_ABC_DOCUMENT12EXXXXXXXXXXZ'
TCC+DHL'
QTY+47:1:EA'
GID+2+1:EA'
LOC+27+CH'
MOA+38:85:EUR'
MOA+146:8.5:EUR'
MOA+43:6.0000:EUR'
FTX+LIN'
FTX+AAA+++S1_I2_L2_DESCRIPTION OF GOODS
XXXXXXXXXXXXXXXXXXXXXXXXXXXXXXXXXXXXXXXXXXXXXXXXXXXXXXXXXXXXXXXXXXXXXXXXXXXXXXXXXXXXXXXXX
XXXXXXXXXXXXXXXXXXXXXXXXXXXXXXXXXXXXXXXXXXXXXXXXXXXXXXXXXXXXXXXXXXXXXXXXXXXXXXXXXXXXXXXXXX
XXXXXXXXXXXXXXXXXXXXXXXXXXXXXXXXXXXXXXXXXXXXXXXXXXXXXXXXXXXXXXXXXXXXXXXXXXXXXXXXXXXXXXXXXX
XXXXXXXXXXXXXXXXXXXXXXXXXXXXXXXXXXXXXXXXXXXXXXXXXXXXXXXXXXXXXXXXXXXXXXXXXXXXXXXXXXXXXXXXXX
XXXXXXXXXXXXXXXXXXXXXXXXXXXXXXXXXXXXXXXXXXXXXXXXXXXXXXXXXXXXXXXXXXXXXXXXXXXXXXXXXXXXXXXXXX
XXXXXXXXXXXXXXXXXXXXXXXXXXXXXXXXXXXXXXXXXXXXXXXXXXXXXXXXXXXXXXXXXXXXXXXXXXXXXXXXXXXXXXXXXX
XXXXXXXXXXXXXXXXXXXXXXXXXXXXXXXZ'
```

```
MEA+AAF+AAF+KGM:3.35'
MEA+AAF+AAE+KGM:4.45'
RFF+HS:S1_I2_L2_EXP_CLASSIFICAEXXXXXXXXXXXXXXXXXXXXXXXXXXXXXXXXXXXXXXXXXXXXXXXXXZ'
RFF+MF:S1_I2_L2_PART_NUMBER123EXXXXXXXXXXXXXXXXXXXXXXXXXXXXXXXXXXXXXXXXXXXXXXXXXZ'
RFF+AFE:S1_I2_L2_ECCN_NUMBER123EXXXXXXXXXXXXXXXXXXXXXXXXXXXXXXXXXXXXXXXXXXXXXXXXXZ'
RFF+ABW:S1_I2_L2_SKU1_NUMBER123EXXXXXXXXXXXXXXXXXXXXXXXXXXXXXXXXXXXXXXXXXXXXXXXXXZ'
DOC+585+S1_I2_L2_972_DOCUMENT12EXXXXXXXXXXXZ'
DOC+861+S1_I2_L2_COO_DOCUMENT12EXXXXXXXXXXXZ'
DOC+ABC+S1_I2_L2_ABC_DOCUMENT12EXXXXXXXXXXXZ'
TCC+DHL'
QTY+47:10:EA'
UNT+26+1'
UNZ+1+518'
```

Appendix F – Return Shipments

A “Return” shipment (a shipment of items previously exported from a country, by any carrier, now being returned for repair or some other reason) may, depending on the shipment destination country, need to be assessed differently by destination Customs. Therefore particular information may need to be provided in the manifest data submitted for such a shipment and on any documents also submitted, such as a Commercial Invoice.

The Commercial Invoice may be rendered as an image file by DHL Express from the manifest data, which can then be made available to the shipper (please contact DHL Express if this solution is required).

The information particular to Return shipments is as follows:

No.	Information Required	Location in Message
1	Original Export Date (of line item within shipment)	Segment Group 22 (Invoice Line Item) RFF with ZZZ qualifier *e.g. RFF+ZZZ:original export date'*
2	Original Export Tracking ID (of line item within shipment) – i.e. consignment note number of shipment on which item/s being returned were originally exported	Segment Group 22 (Invoice Line Item) RFF with ERN qualifier *e.g. RFF+ERN:original export tracking ID'*
3	Original Export Carrier Name (of line item within shipment) – i.e. carrier of shipment on which item/s being returned were originally exported	Segment Group 22 (Invoice Line Item) RFF with CN qualifier *e.g. RFF+CN:2 original outbound carrier name'*
4	Duty Free Import Remark – i.e. free text remark to assist in Customs submission for Return shipment Remarks differ by re-import / destination country. Examples: • US: **“**Goods returning to the US and were not advanced in value or condition while outside the US” • UK: "British Returned Goods" • CA: "Canadian Goods Return" • AU: “Australian goods returned” NZ: “New Zealand Returned Goods”	FTX Segment (Shipment/ Invoice level) SG 25 – FTX with AAU qualifier *e.g. FTX+AAU+++Duty free import remarks’*
5	Reason for Export	Segment Group 22 (Invoice level) FTX with CEX qualifier Populate with R (Return) *e.g. FTX+CEX+++R'*

Other information mandatory for all dutiable shipments, such as line item descriptions, quantities and values, should also be provided

Example Message with data for Return shipment

```
UNA:+.? '
UNB+UNOC:4+214996805.4144+3D_MESSAGE_HUB+20211215:1105+518'
UNH+1+IFTMIN:D:01B:UN+CUSTOMERSOLUTION'
BGM+740+1234567890+9'
DTM+9:202112151105:203'
DTM+11:202112151105:203'
DTM+63:202112151105:203'
DTM+64:202112151105:203'
TSR+++WPX:57:87'
MOA+43:250.00:EUR'
MOA+157:50.00:EUR'
MOA+22:30.00:EUR'
MOA+64:25.5:EUR'
MOA+79:144.5:EUR'
FTX+AAA+++SHIPMENT1_CONTENTS'
FTX+CEX+++R'
FTX+AAI+++Commercial'
FTX+AAU+++DUTY FREE IMPORT REMARKS’
CNT+7:4.7567:KGM'
CNT+29:6.5067:KGM'
CNT+11:1'
CNT+15:0.059:MTQ'
LOC+5+SIN'
LOC+8+BSL'
TOD+6++DDU:::100'
LOC+1+SIN:::CHANGI AIRPORT SINGAPORE1'
RFF+SRN:0306082740'
RFF+CO:SH1_I1_COB0306082740XE'
RFF+CU:SH1_I1_CUN_0306082740XE'
RFF+MRN:SH1_I1_MRN_0306082740XE'
GOR+1'
DOC+380+SH1_I1_INV1234E'
DTM+3:202112151105:203'
DOC+39+SH1_I1_PAS1234E'
DOC+ABC+SH1_I1_ABC1234E'
NAD+CZ+211111111++Shipper Company+Address 1+Singapore++629043+SG'
CTA+AC+:SP1_CONTACT NAME'
COM+SP1_TELEPHONE NUMBER:TE'
TSR+++WPX'
FTX+AAI+++Business'
NAD+CN+962222222++Consignee Name+Address 1+Kreuzlingen++8280+CH'
LOC+5+BSL'
LOC+8+BSL'
CTA+AC+:RV1_CONTACT NAME'
COM+RV1_TELEPHONE NUMBER:TE'
COM+RV1_MOBILE NUMBER:AL'
COM+RV1_FAX NUMBER:FX'
COM+RV1_EMAIL ADDRESS:EM'
RFF+VA:CHVAT123456RV1E'
RFF+FT:CHFTZ123456RV1E'
```

```
TSR+++WPX'
FTX+AAI+++Private'
NAD+EX+++Exporter Company+Address1+Singapore++629043+SG'
CTA+AC+:EX1_CONTACT NAME'
COM+EX1_TELEPHONE NUMBER:TE'
COM+EX1_MOBILE NUMBER:AL'
COM+EX1_FAX NUMBER:FX'
COM+EX1_EMAIL ADDRESS:EM'
RFF+VA:SGVAT123456EX1E'
RFF+FT:SGFTZ123456EX1E'
TSR+++WPX'
FTX+AAI+++Direct Consignee'
NAD+IM+962222222++Consignee Name+Address 1+Kreuzlingen++8280+CH'
CTA+AC+:IP1_CONTACT NAME'
CTA+IC+:IP1_CONTACT NAME'
COM+IP1_TELEPHONE NUMBER:TE'
COM+IP1_MOBILE NUMBER:AL'
COM+IP1_FAX NUMBER:FX'
COM+IP1_EMAIL ADDRESS:EM'
RFF+DA:DAN123456IP1XXE'
RFF+FT:CHFTZ123456IP1E'
TSR+++WPX'
FTX+AAI+++Other'
GID+1+1:PK'
MEA+WT+AAE+KGM:0.19'
MEA+VOL+AAW+MTQ:0.059'
DIM+2+CMT:58:35:29'
PCI+18'
GIN+AW+00:340112310464786534'
GID+1+1:EA'
LOC+27+SG'
MOA+39:50.00:EUR'
MOA+146:25.0000:EUR'
MOA+43:35.0000:EUR'
FTX+LIN'
FTX+AAA+++S1_I1_L1_DESCRIPTION OF GOODS'
MEA+AAF+AAF+KGM:1.2567'
MEA+AAF+AAE+KGM:2.2567'
RFF+ZZZ:ORIGINAL EXPORT DATE'
RFF+ERN:ORIGINAL EXPORT TRACKING ID'
RFF+CN:ORIGINAL OUTBOND CARRIER'
RFF+HS:S1_I1_L1_EXP_CLASS'
RFF+MF:S1_I1_L1_PART_NUMBER123'
RFF+AFE:S1_I1_L1_ECCN_NUMBER123'
RFF+ABW:S1_I1_L1_SKU1_NUMBER123'
DOC+585+S1_I1_L1_972_DOCUMENT12'
DOC+861+S1_I1_L1_COO_DOCUMENT12'
DOC+ABC+S1_I1_L1_ABC_DOCUMENT12'
TCC+DHL'
QTY+47:1:EA'
GID+2+1:EA'
```

```
LOC+27+CH'
MOA+38:94.50:EUR'
MOA+146:47.2500:EUR'
MOA+43:40.0000:EUR'
FTX+LIN'
FTX+AAA+++S1_I1_L2_DESCRIPTION OF GOODS'
MEA+AAF+AAF+KGM:3.5'
MEA+AAF+AAE+KGM:4.25'
RFF+ZZZ:ORIGINAL EXPORT DATE'
RFF+ERN:ORIGINAL EXPORT TRACKING ID'
RFF+CN:ORIGINAL OUTBOND CARRIER'
RFF+HS:S1_I1_L2_EXP_CLASS'
RFF+MF:S1_I1_L2_PART_NUMBER123EX'
RFF+AFE:S1_I1_L2_ECCN_NUMBER123EX'
RFF+ABW:S1_I1_L2_SKU1_NUMBER123EX'
DOC+585+S1_I1_L2_972_DOCUMENT12EX'
DOC+861+S1_I1_L2_COO_DOCUMENT12EX'
DOC+ABC+S1_I1_L2_ABC_DOCUMENT12EX'
TCC+DHL'
QTY+47:2:EA'
UNT+26+1'
UNZ+1+518'
```