COURSE END PROJECT

MOTION DETECTION SYSTEM

IOT LABORATORY (A8603)

BACHELOR OF TECHNOLOGY

IN

COMPUTER SCIENCE AND ENGINEERING

SUBMITTED BY

24881A05A7 - MD.SAHIL KHAN
24881A05C3 - T.JASWANTH

UNDER THE GUIDANCE OF

MS BAALNE ANJALI
Assistant Professor, Dept of CSE

DEPARTMENT OF COMPUTER SCIENCE AND ENGINEERING

VARDHAMAN COLLEGE OF ENGINEERING

(AUTONOMOUS)

Affiliated to JNTUH, Approved by AICTE, Accredited by NAAC with A++ Grade,
UGC "College with Potential for Excellence" and ISO 9001:2015 Certified

Shamshabad – 501 218, Hyderabad

2025 - 2026

Autonomous Institute, Affiliated to **JNTUH,**

Approved by **AICTE,** Accredited by **NAAC** with **A++** Grade Kacharam, Shamshabad, Hyderabad- 501 218, Telangana, India.

DEPARTMENT OF COMPUTER SCIENCE AND ENGINEERING

This is to certify that the Course End Project titled **"Motion Detection System"** is carried out by **MD. Sahil Khan , T. Jaswanth** and with Roll Numbers **24881A05A7, 24881A05C3** towards **A8603 – INTERNET OF THINGS LABORATORY** course in partial fulfilment of the requirements for the award of degree of **Bachelor of Technology** in **Computer Science and Engineering** during the Academic year 2025-26.

Signature of the Course Faculty
Ms. Baalne Anjali
Assistant Professor, CSE

Signature of the HOD
Dr. Karnati Ramesh, HOD, CSE

VARDHAMAN COLLEGE OF ENGINEERING

(AUTONOMOUS)

Affiliated to JNTUH, Approved by AICTE, Accredited by NAAC with A++ Grade,
UGC "College with Potential for Excellence" and ISO 9001:2015 Certified

DEPARTMENT OF COMPUTER SCIENCE AND ENGINEERING

Course End Project

IOT Laboratory (A8603)

Check List

S. No.	Content	Status (✓ / ×)
1	Abstract	✓
2	Objectives	✓
3	Problem Statement	✓
4	Algorithm	✓
5	Flow Chart	✓
6	Source Code	✓
7	Input	✓
8	Output	✓
9	Conclusion	✓
10	Future Scope	✓
11	References	✓

Signature of the Guide
Ms. Baalne Anjali
Assistant Professor
Dept. of CSE

Course End Project
IOT Laboratory (A8603)
Table of Content

S. No.	Content	Page. No.
1	Abstract	5
2	Problem Statement	6
3	Objectives	7
4	Algorithm	8
5	Flow Chart	9,10
6	Source Code	11
7	Input	12
8	Output	13
9	Conclusion	14
10	Future Scope	15
11	References	16

1.ABSTRACT

The IoT-based Motion Detection System is designed to detect human movement using a simple and cost-effective approach with an Arduino Uno and a PIR sensor. The system continuously monitors the surroundings and identifies motion based on changes in infrared radiation emitted by objects, particularly humans. This makes it suitable for basic security and automation applications.

The main objective of this project is to create an efficient and reliable motion detection system that can alert users when movement is detected. When motion is sensed, the system activates output devices such as LEDs or buzzers, providing immediate indication. The integration of IoT concepts allows for future expansion, such as sending alerts to mobile devices or cloud platforms.

This system is widely applicable in areas like home security, office monitoring, and restricted zone surveillance. It helps in reducing manual monitoring efforts and enhances safety by providing real-time detection. The use of simple electronic components makes it accessible for students and beginners.

Overall, the project demonstrates the practical implementation of embedded systems and IoT concepts. It highlights how low-cost hardware can be used to build intelligent systems for real-world applications, making it a valuable learning experience in automation and sensor-based technologies.

2. PROBLEM STATEMENT

In today's world, ensuring security and safety in homes, offices, and public spaces has become increasingly important. Traditional monitoring systems often rely on continuous human supervision, which is inefficient, time-consuming, and prone to human error. There is a need for an automated system that can detect movement without constant manual observation.

Many existing security systems are either expensive or complex, making them inaccessible for small-scale or personal use. This creates a gap where a simple, low-cost, and efficient motion detection solution is required. An affordable system that can reliably detect human presence would be highly beneficial for everyday applications.

Another challenge is the lack of real-time response in conventional systems. Without immediate alerts, unauthorized access or suspicious activity may go unnoticed. A system that can instantly respond to motion by triggering alerts such as lights or alarms can significantly improve security and awareness.

Additionally, energy efficiency is an important factor. Devices that remain active continuously without purpose can lead to unnecessary power consumption. A motion-based system ensures that outputs are activated only when needed, making it more efficient and practical.

Therefore, the problem is to design and implement a simple, cost-effective, and reliable motion detection system using Arduino and sensors. The system should be capable of detecting movement accurately and providing immediate indication, while also being scalable for future IoT-based enhancements.

3. OBJECTIVES

1. To design a motion detection system using Arduino Uno
2. To detect human movement using a PIR sensor
3. To provide visual indication using LED when motion is detected
4. To generate an alert using a buzzer (optional)
5. To develop a low-cost and efficient system
6. To reduce the need for continuous manual monitoring
7. To improve basic security in homes and offices
8. To understand the working of sensors and microcontrollers
9. To implement real-time response to motion detection
10. To ensure low power consumption by activating outputs only when needed
11. To create a system that can be extended to IoT applications in the future

4. Algorithm

1. Start the system
2. Initialize Arduino pins for PIR sensor, LED, and buzzer
3. Set PIR sensor pin as input
4. Set LED and buzzer pins as output
5. Read the input value from the PIR sensor
6. Check if motion is detected (HIGH signal)
7. If motion is detected, turn ON LED and buzzer
8. If no motion is detected, turn OFF LED and buzzer
9. Repeat the process continuously in a loop
10. End (system runs continuously)

5. PROPOSED SYSTEM

5.1 FLOW CHART

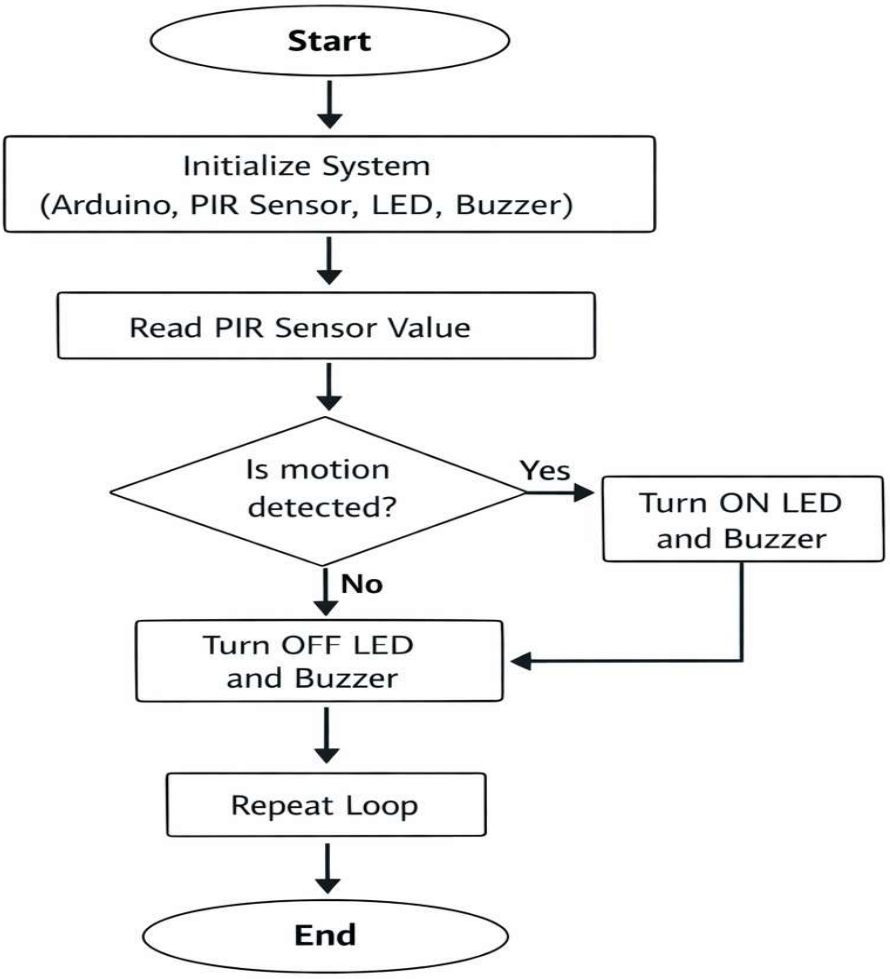

5.2WORKING MODEL

1. Power is given to the Arduino Uno using USB.
2. The Arduino initializes all pins:

• PIR sensor pin → INPUT
• LED and buzzer pins → OUTPUT

3. Initially, the system is in monitoring state.
4. When motion is detected by the PIR sensor:
   • Sensor outputs HIGH signal
   • Arduino reads the signal
5. When motion is detected:
   • LED turns ON
   • Buzzer activates (if connected)
   • Alert indication is given
6. When no motion is detected:
   • Sensor outputs LOW signal
   • LED and buzzer remain OFF

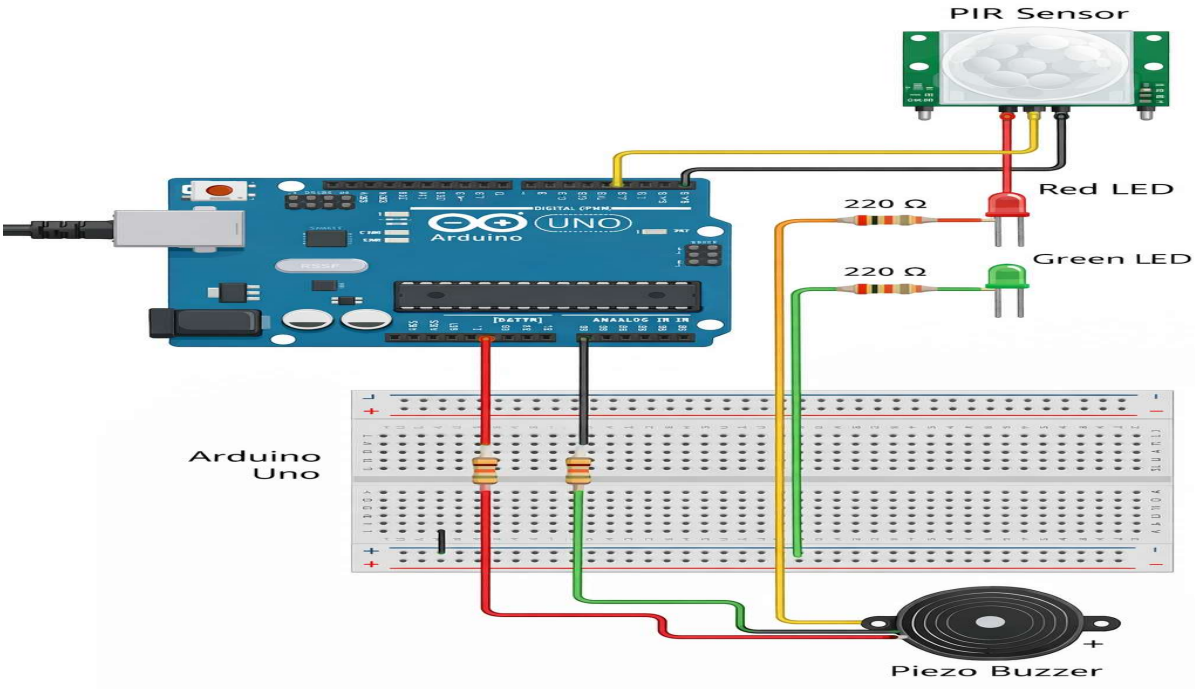

6.SOURCE CODE

```
// Parking Slot Detection System
// Arduino Uno + HC-SR04 + LEDs
const int trigPin = 9;
const int echoPin = 10;
const int greenLED = 3;
const int redLED = 4;
long duration;
int distance;
}
void setup() {
 // pinMode(trigPin, OUTPUT);
 // pinMode(echoPin, INPUT);
 // pinMode(greenLED, OUTPUT);
 // pinMode(redLED, OUTPUT);
 Serial.begin(9600); // For Serial Monitor
}
void loop() {
 // Clear trig Pin
 digitalWrite(trigPin, LOW);
 delayMicroseconds(2);
 digitalWrite(trigPin, HIGH);
 delayMicroseconds(10);
 digitalWrite(trigPin, LOW);
 // Read echo time
 duration = pulseIn(echoPin, HIGH);
 // Convert to distance in cm
 distance = duration * 0.034 / 2;
 // Print distance
 Serial.print("Distance: ");
 Serial.print(distance);
 // Parking logic
 if (distance > 0 and distance < 10) {
    digitalWrite(redLED, HIGH);
    digitalWrite(greenLED, LOW);
 } else {
    digitalWrite(redLED, LOW);
```

7.INPUT

The input of the system is provided by the ultrasonic sensor (HC-SR04), which detects the presence of an object in the parking slot. The sensor sends ultrasonic waves and receives the reflected signal to calculate the distance between the sensor and the object. This distance value is then sent to the Arduino Uno for processing. Based on the measured distance, the system determines whether the parking slot is occupied or empty. If an object is detected within a predefined range, it is considered occupied; otherwise, it is considered empty. This input data is continuously monitored in real time.

8.OUTPUT

The output of the system is displayed using LEDs based on the distance measured by the ultrasonic sensor. When an object (such as a vehicle) is detected within the predefined range, the Arduino processes the input and turns ON the red LED, indicating that the parking slot is occupied. At the same time, the green LED turns OFF. When no object is detected within the specified distance, the system turns ON the green LED, indicating that the parking slot is empty, while the red LED remains OFF. This provides a clear and immediate visual indication of the parking slot status in real time.

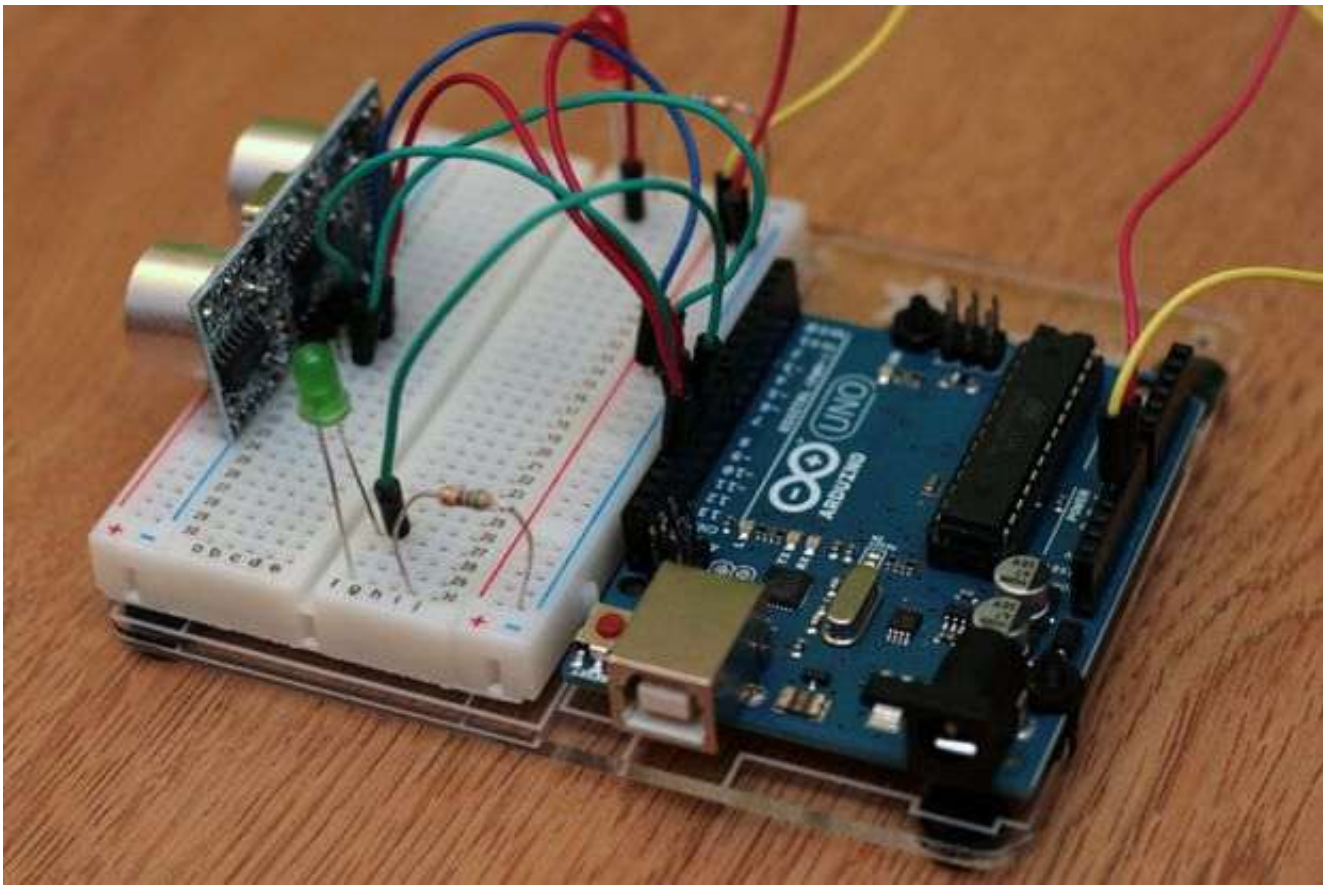

9.CONCLUSION

The project successfully demonstrates a parking slot detection system using Arduino Uno and an ultrasonic sensor. It accurately detects the presence of a vehicle based on distance measurement and provides a clear visual indication using LEDs. The system is simple, low-cost, and easy to implement, making it suitable for beginners and educational purposes. It reduces the need for manual monitoring of parking spaces and ensures real-time response to changes in occupancy. The project also helps in understanding the working of sensors, microcontrollers, and basic embedded systems. Furthermore, it can be extended to IoT-based smart parking systems by integrating wireless communication for remote monitoring and control, making it useful for real-world applications.

10.FUTURE SCOPE

• The system can be enhanced by integrating IoT technology to send real-time parking status to mobile applications or cloud platforms
• It can be expanded to monitor multiple parking slots simultaneously using multiple sensors
• The project can be improved by adding an LCD or display system to show slot availability directly
• Wireless communication modules like WiFi or Bluetooth can be added for remote monitoring
• The system can be integrated with automatic gate control for smart parking management
• It can be upgraded with a mobile notification system to alert users about available parking spaces
• The project can be implemented on a larger scale in malls, offices, and smart city parking systems for efficient space utilization

11.REFERENCES

- Arduino Official Website – https://www.arduino.cc
- HC-SR04 Ultrasonic Sensor Datasheet
- Electronics Tutorials – https://www.electronics-tutorials.ws
- Instructables – Arduino Parking Sensor Projects
- Research articles on IoT and smart parking systems from IEEE and Google Scholar