Quandela Challenge

Are Quantum PINNs actually doing anything?

ZombieCats

Zombie1 : Chayma

Zombie2 : Iva

Zombie3 : Sahil

Quantum PINNs vs. PINNs

Why is this interesting?

$$\frac{\partial u}{\partial t} = \alpha \frac{\partial^2 u}{\partial x^2}$$

PINN

NN + physical intuition

QPINN:

PINN + qu el

MAGIC

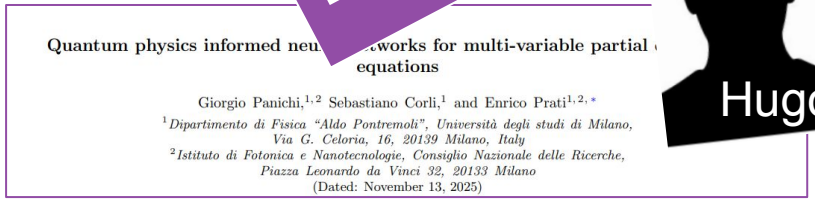

Quantum physics informed neu tworks for multi-variable partial equations

Giorgio Panichi,[1,2] Sebastiano Corli,[1] and Enrico Prati[1,2,*]

[1] *Dipartimento di Fisica "Aldo Pontremoli", Università degli studi di Milano, Via G. Celoria, 16, 20139 Milano, Italy*

[2] *Istituto di Fotonica e Nanotecnologie, Consiglio Nazionale delle Ricerche, Piazza Leonardo da Vinci 32, 20133 Milano*

(Dated: November 13, 2025)

PINNs VS QPINNs: parameter budget

(Q)PINN: ~270 param. :
QPINN follows true prediction

PINN no convergence!

(Q)PINN: ~400 parameters

Success!!!

This will be our classical benchmark!

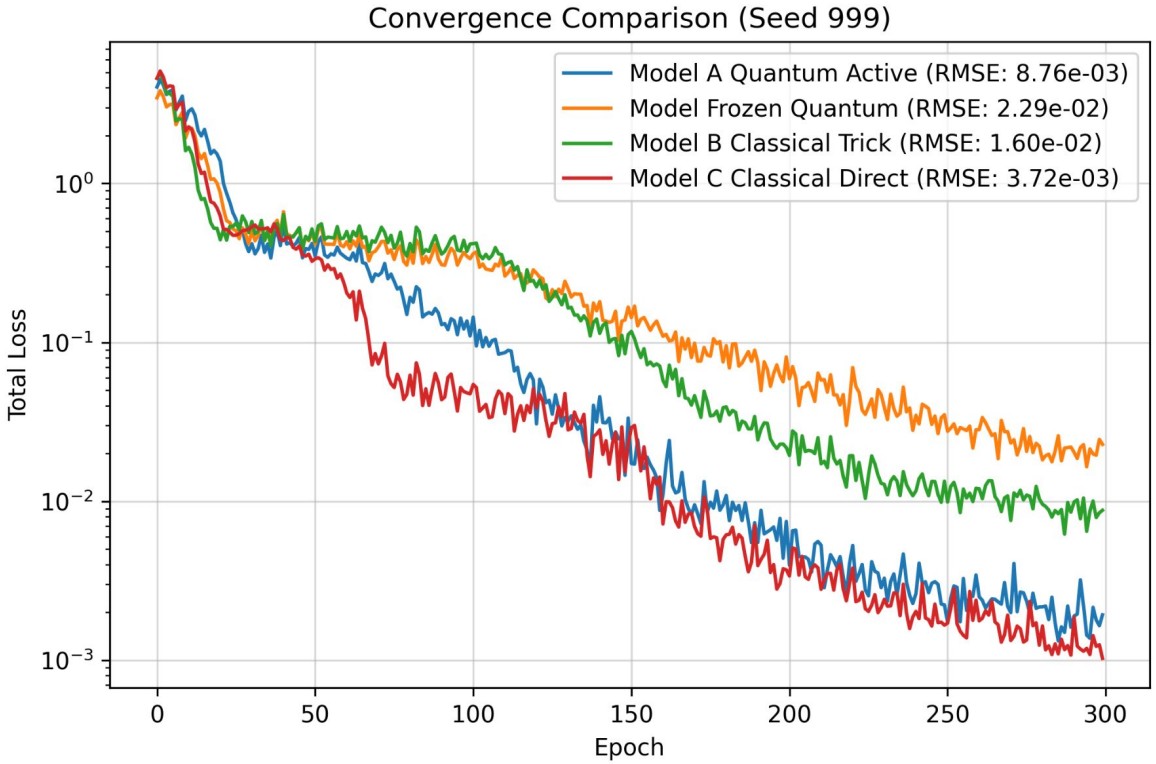

PINNs VS QPINNs: parameter budget with Time

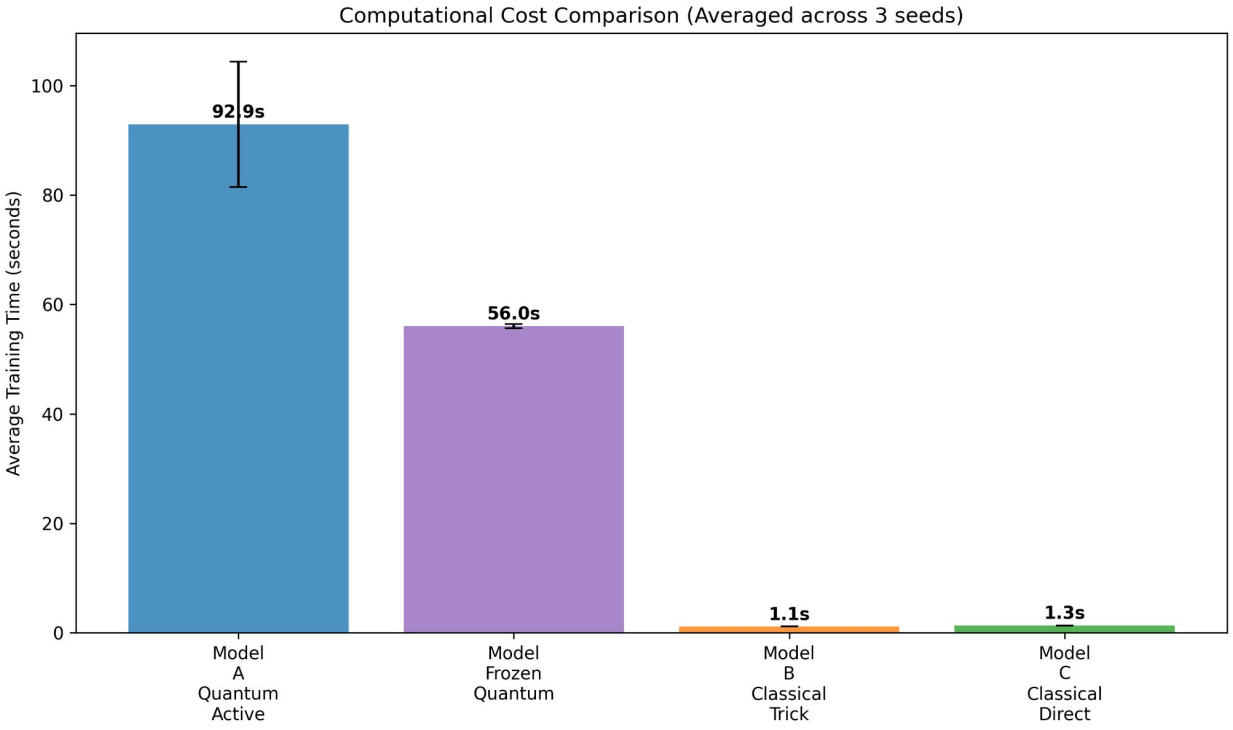

(Q)PINN: ~400 parameters

Still in the regime of classical simulability

Investigating Quantum Resources

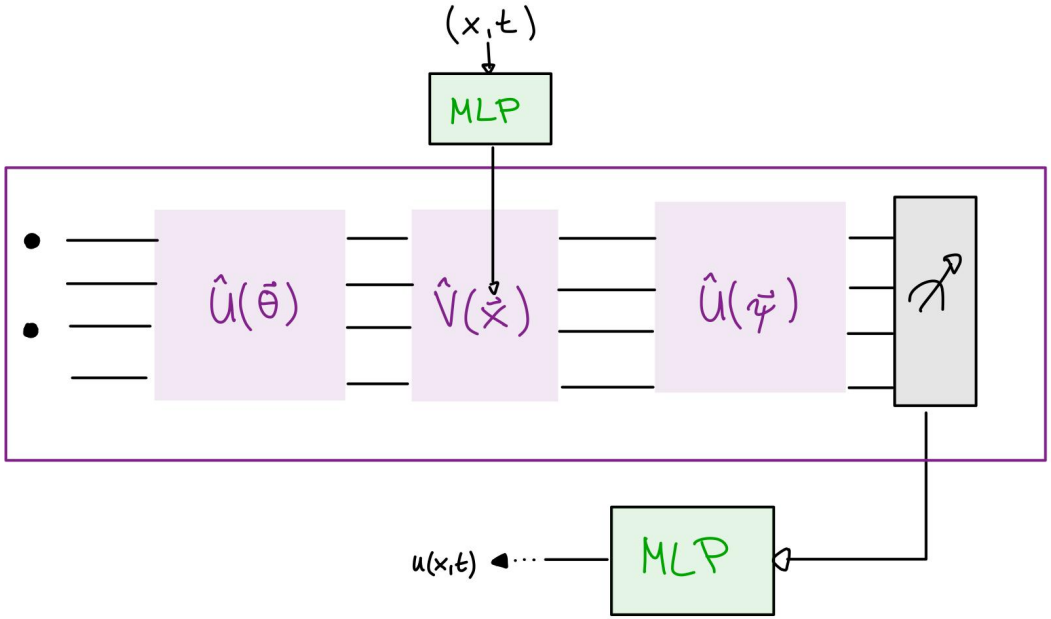

Quantum Resources := # Quantum Parameter

Quantum Resources: circuit ‘depth’

QPINN:

- increase # quantum parameters
- keep # classical parameters constant

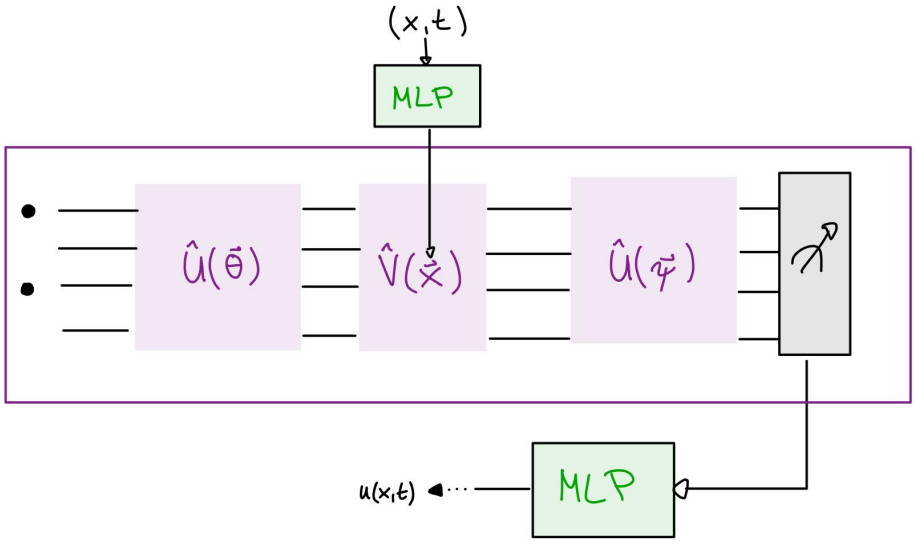

Quantum Resources: circuit ‘depth’

Runtime per seed:

25 - 30 min

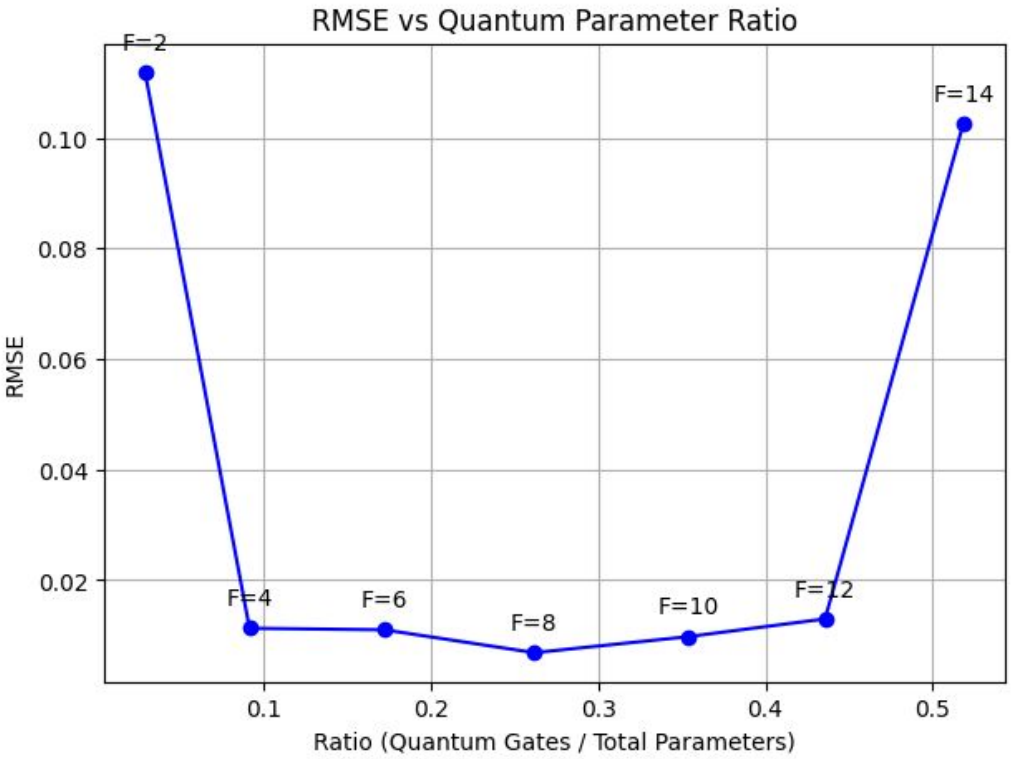

Quantum Resources: circuit ‘depth’

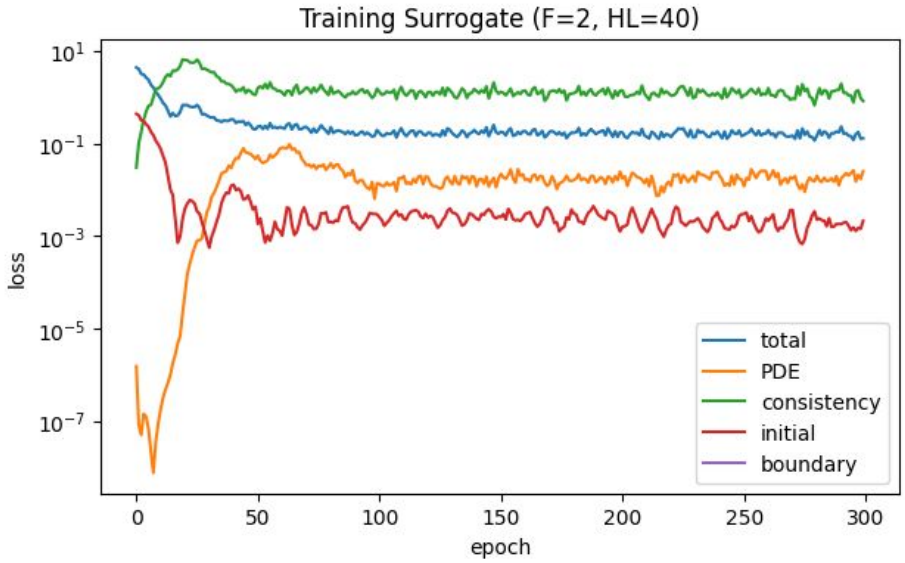

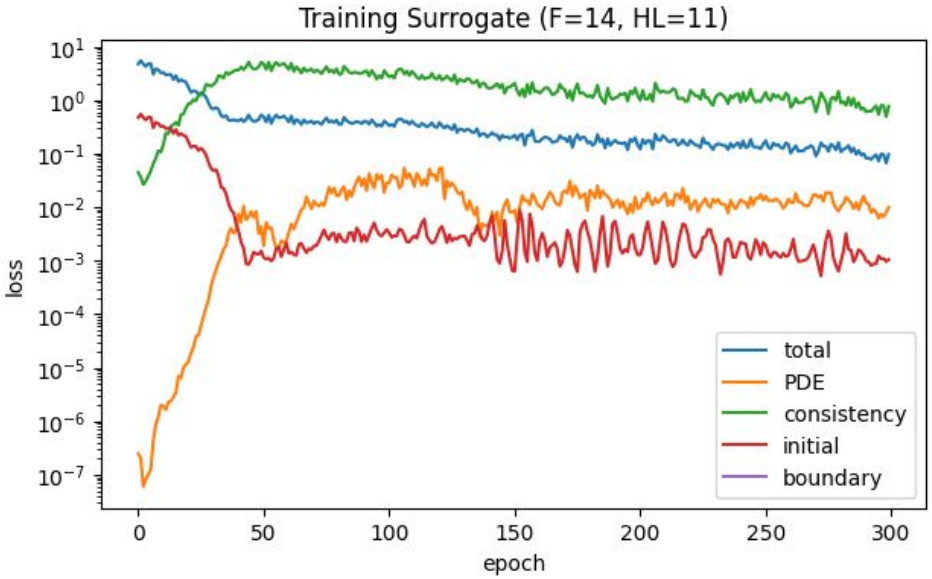

Outlook

Further exploration of ‘Quantum’:

- implement ‘layers’, e.g.
- change geometry (U)
- Look at implementation on real hardware
- Look at noise

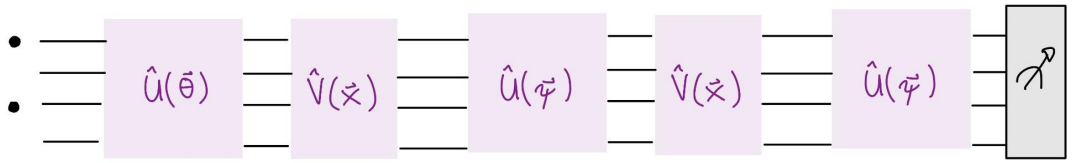

PINNs VS QPINNs: parameter budget

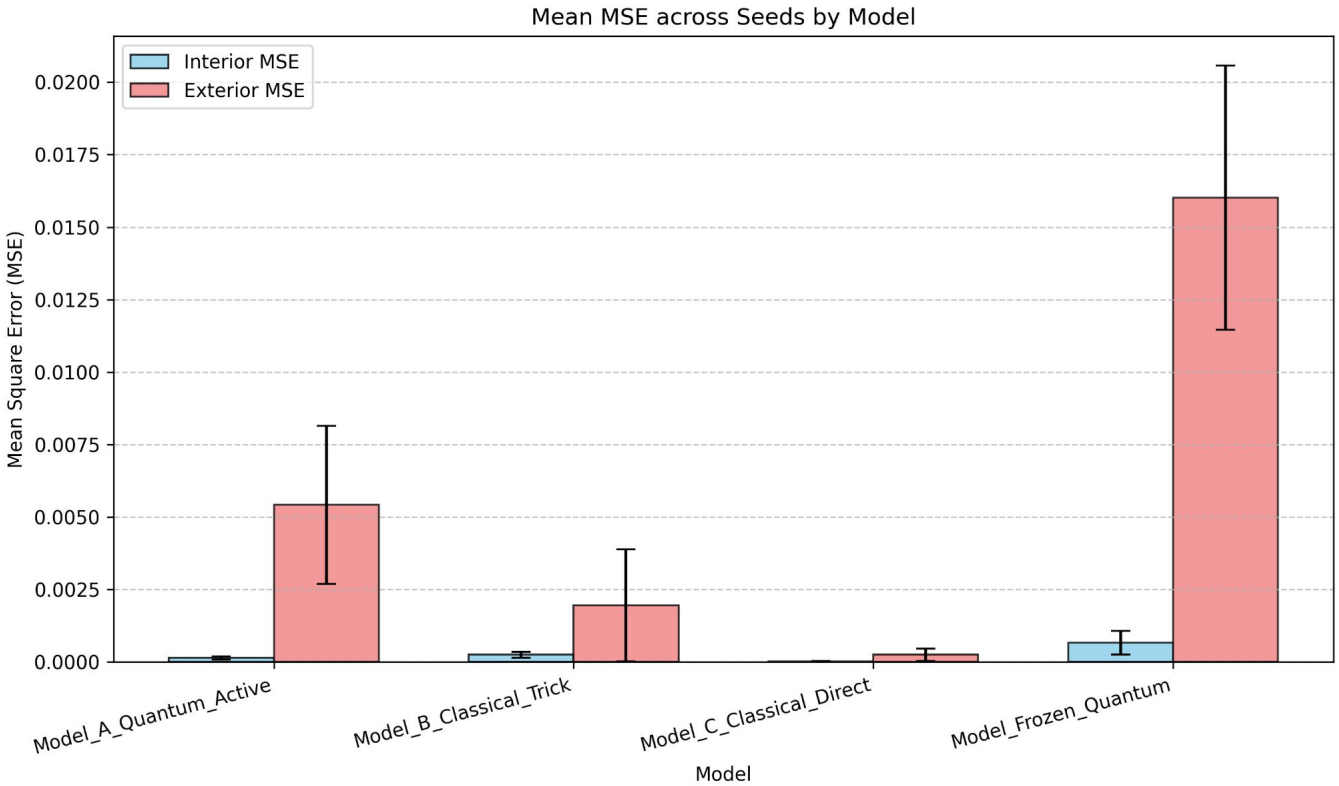

(Q)PINN: ~400 parameters, average across 3 seeds

Summary

Tests

PINN baseline

Quantum resources:

- modify ratio of parameters
- increase both # parameter

Freeze Quantum Layer

Metrics

- MAE
- L_inf error
- NMSE
- Loss convergence
- Runtime
- Seed stability

That's all Folks!