Design and Evaluation of a CO_2 Capture and Purification System from Amine Regenerator Vent Gas at GAIL Vijaipur and Its Conversion to Green Methanol

GAIL (India) Limited

Gas & Beyond

Vijaipur, Guna (M.P)

Mr. Mayank Garg
Manager(GPU-OPS)

Thatavarty Sai Hitesh
NIT Raipur

GAIL (India) Limited

Gas & Beyond

Certificate

Certificate of Completion

This is to certify that TANISH DHAVALE, student of B.Tech in Chemical Engineering at NATIONAL INSTITUTE OF TECHNOLOGY, RAIPUR, CHATTISGARH, has successfully completed training in Gas Processing Unit(GPU),Department at GAIL (India) Limited, Vijaipur from 15th May 2025 to 12 June 2025. He has successfully completed the project entitled, "**Design and Evaluation of a CO_2 Capture and Purification System from Amine Regenerator Vent Gas at GAIL Vijaipur and Its Conversion to Green Methanol**" under the guidance of Mr. Abhay Kumar Gupta HOD(GPU-OPS),Mr. Anwar Alam, DGM (GPU-OPS), and Mr. Mayank Garg, Manager, (GPU-OPS), GAIL (India) Ltd. His conduct and behavior during the Vocational training period was found to be exemplary.

Abstract

This project focuses on the sustainable production of methanol by utilizing waste carbon dioxide from the Gas Sweetening Unit (GSU) of GAIL's Vijaipur plant and green hydrogen generated from the plant's newly commissioned 10 MW electrolyzer. The core objective is to reduce carbon emissions by converting captured CO_2 into value-added fuel using renewable hydrogen, thus supporting GAIL's broader decarbonization goals. The chemical process, based on the reaction $CO_2 + 3H_2 \rightarrow CH_3OH + H_2O$, was simulated using Aspen Plus with the Peng-Robinson property method.

The hydrogen generation potential was estimated using an electrolyzer efficiency of 55 kWh/kg, resulting in approximately 4.36 tonnes/day of H_2 available for methanol synthesis. Based on this input, the theoretical methanol yield was calculated to be around 23.1 tonnes/day. The Aspen Plus simulation produced a closely matching result of 22.77 tonnes/day of methanol, alongside 12.81 tonnes/day of water as a byproduct. The hydrogen was completely consumed, while CO_2 conversion was limited to approximately 1.77%, confirming hydrogen as the limiting reactant.

The results validate the feasibility of integrating green hydrogen with industrial CO_2 streams for methanol production at pilot scale. The project also discusses practical future steps such as scaling up hydrogen input, improving carbon capture efficiency, and reusing the water byproduct. Overall, the study demonstrates a viable pathway for clean methanol production that aligns with circular economy principles and GAIL's sustainability roadmap.

# Acknowledgement

We take this opportunity to express our heartfelt gratitude to all those who supported and guided us during the successful completion of this project titled "Design and Evaluation of a CO_2 Capture and Purification System from Amine Regenerator Vent Gas at GAIL Vijaipur and Its Conversion to Green Methanol."

We are sincerely thankful to Mr.Abhay kumar Gupta Sir(Head Of department(GPU-OPS)), Mr Anwar Alam Sir(Deputy General Manager (GPU-OPS)) and our mentor, Mayank Garg Sir (Manager (GPU-OPS)), for his continuous support, insightful feedback, and expert guidance throughout the project. His encouragement and knowledge were invaluable to our learning experience.

We appreciate the entire staff and management at GAIL Vijaipur for providing us with access to facilities, data, and an environment conducive to research and technical development.

Index

Chapter - 1

Introduction

1.1 About GAIL: GAIL (India) Limited, is India's flagship Natural Gas company,integrating all aspects of the Natural Gas value chain including Exploration & Production, Processing, Transmission, Distribution and Marketing and its related services. Now it is spearheading the move to a new era of clean fuel industrialisation, creating a quadrilateral of green energy corridors that connect major consumption centres in India with major gas fields, LNG terminals and other cross border gas sourcing points.

1.2 GAIL's Business Portfolio includes:

7,700 km of Natural Gas high pressure trunk pipeline with a capacity to carry 157 MMSCMD of natural gas across the country

7 LPG Gas Processing Units to produce 1.2 MMTPA of LPG and other liquid hydrocarbons

North India's only gas based integrated Petrochemical complex at Pata with a capacity of producing 4,10,000 TPA of Polymers

1,922 km of LPG Transmission pipeline network with a capacity to transport 3.8 MMTPA of LPG

27 oil and gas Exploration blocks and 3 Coal Bed Methane Blocks

13,000 km of OFC network offering highly dependable band with for telecom service providers

Joint venture companies in Delhi, Mumbai, Hyderabad, Kanpur, Agra, Lucknow, Bhopal, Agartala and Pune, for supplying Piped Natural Gas (PNG) to households and commercial users, and Compressed Natural Gas (CNG) to the transport sector

GAIL’s SSLNG arm delivers liquefied natural gas in ISO tanks and cryogenic containers to remote or off-grid customers—power plants, industries, and transport—unlocking new markets beyond pipeline reach.

At Vijaipur, GAIL has commissioned a 10 MW PEM electrolyzer, producing 4.3 t/day of 99.999%-pure “green” H_2 using renewable power, positioning GAIL at the forefront of India’s hydrogen economy.

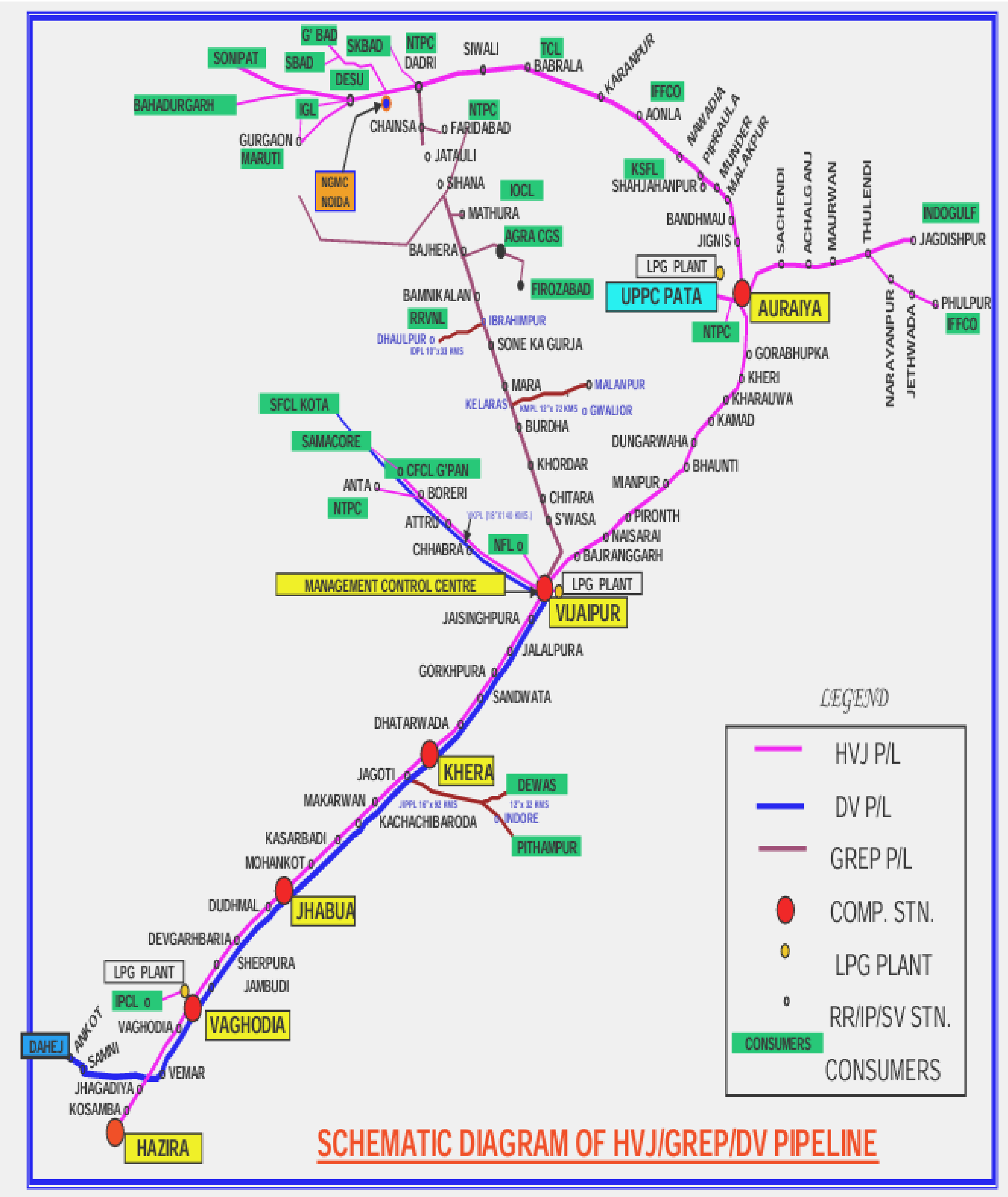
SCHEMATIC DIAGRAM OF HVJ/GREP/DV PIPELINE
LEGEND
HVJ P/L
DV P/L
GREP P/L
COMP. STN.
LPG PLANT
RR/IP/SV STN.
CONSUMERS
CONSUMERS
SONIPAT
G' BAD
SKBAD
NTPC
DADRI
SIWALI
TCL
BABRALA
KARANPUR
SBAD
DESU
BAHADURGARH
IGL
CHAINSA
FARIDABAD
GURGAON
MARUTI
NGMC NOIDA
JATAULI
SIHANA
IOCL
MATHURA
AGRA CGS
BAJHERA
FIROZABAD
BAMNIKALAN
RRVNL
IBRAHIMPUR
DHAULPUR
SONE KA GURJA
MARA
MALANPUR
KELARAS
GWALIOR
BURDHA
KHORDAR
CHITARA
S'WASA
IFFCO
AONLA
NAWADIA
PIPRAULA
MUNDER
MALAKPUR
KSFL
SHAHJAHANPUR
BANDHMAU
JIGNIS
LPG PLANT
UPPC PATA
AURAIYA
NTPC
SACHENDI
ACHALGANJ
MAURWAN
THULENDI
INDOGULF
JAGDISHPUR
NARAYANPUR
JETHWADA
PHULPUR
IFFCO
GORABHUPKA
KHERI
KHARAUWA
KAMAD
DUNGARWAHA
BHAUNTI
MANPUR
PIRONTH
NAISARAI
BAJRANGGARH
SFCL KOTA
SAMACORE
CFCL G'PAN
ANTA
BORERI
NTPC
ATTRU
CHHABRA
NFL
MANAGEMENT CONTROL CENTRE
LPG PLANT
VIJAIPUR
JAISINGHPURA
JALALPURA
GORKHPURA
SANDWATA
DHATARWADA
KHERA
JAGOTI
DEWAS
MAKARWAN
KACHACHIBARODA
INDORE
PITHAMPUR
KASARBADI
MOHANKOT
DUDHMAL
JHABUA
DEVGARHBARIA
SHERPURA
JAMBUDI
LPG PLANT
IPCL
VAGHODIA
VAGHODIA
DAHEJ
ANKOT
SAMNI
VEMAR
JHAGADIYA
KOSAMBA
HAZIRA

Participating stake in the Dahej LNG Terminal and the upcoming Kochi LNG Terminal in Kerala

GAIL has been entrusted with the responsibility of reviving the LNG terminal at Dabhol as well as sourcing LNG

GAIL Gas Limited, a wholly owned subsidiary of GAIL (India) Limited, was incorporated on May 27, 2008 for the smooth implementation of City Gas Distribution (CGD) projects. GAIL Gas Limited is a limited company under the Companies Act, 1956

- Established presence in the CNG and City Gas sectors in Egypt through equity participation in three Egyptian companies: Fayum Gas Company SAE, Shell CNG SAE and National Gas Company SAE
- Stake in China Gas Holding to explore opportunities in the CNG sector in mainland China

A wholly-owned subsidiary company GAIL Global (Singapore) Pte Ltd in Singapore

1.3 GAIL, Vijaipur Plant:

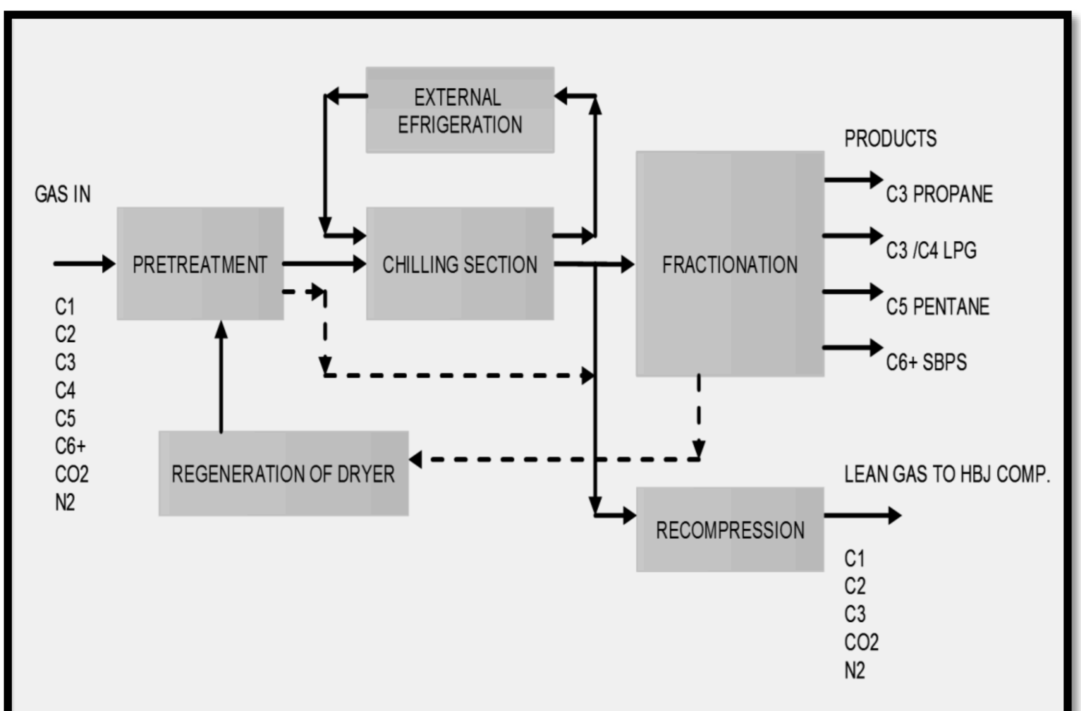

Fig 1.1 Layout of Gas Processing Unit (GPU)

Gail have its first LPG plant at Vijaipur .In this plant LPG is extracted from natural gas by following latest Turbo expander process .The design gas processing capacity of the plant is 15 million standard cubic meters of gas per day (mmscmd) with annual LPG production capacity being 4,06,000 million tons. The other products that are recovered in the process are propane, pentane and naphtha

Commissioning Dates

LPG train-11 (phase-I) - Feb 11, 1991
LPG train -12 (phase-II) - Feb 11,1992

Steps Involved

Gas receiving ,drying and regeneration
Pre-cooling and chill down in expander
Distillation

1.4 Process Description:

LPG recovery facility of each plant is designed to handle 7.5 mmscmd of gas. The natural gas is received from HVJ pipeline to recover LPG, propane, pentane and SBPS (Special Boiling Point Spirit). Feed gas from HVJ pipeline compressor station is presently available at 53.5 kg/cm2 abs at temperature of 31 oC.

- Gas Receiving ,Drying And Regeneration

The natural gas coming from HVJ pipeline flows through a knock out drum (KOD), where the liquid present in gas is knocked off

- From the knock out drum it goes to drier (one operating + one regeneration) having molecular sieve (Zeolite, size 4A) where the moisture content reduces from 81 kg/mmscmd to1 kg/mmscmd

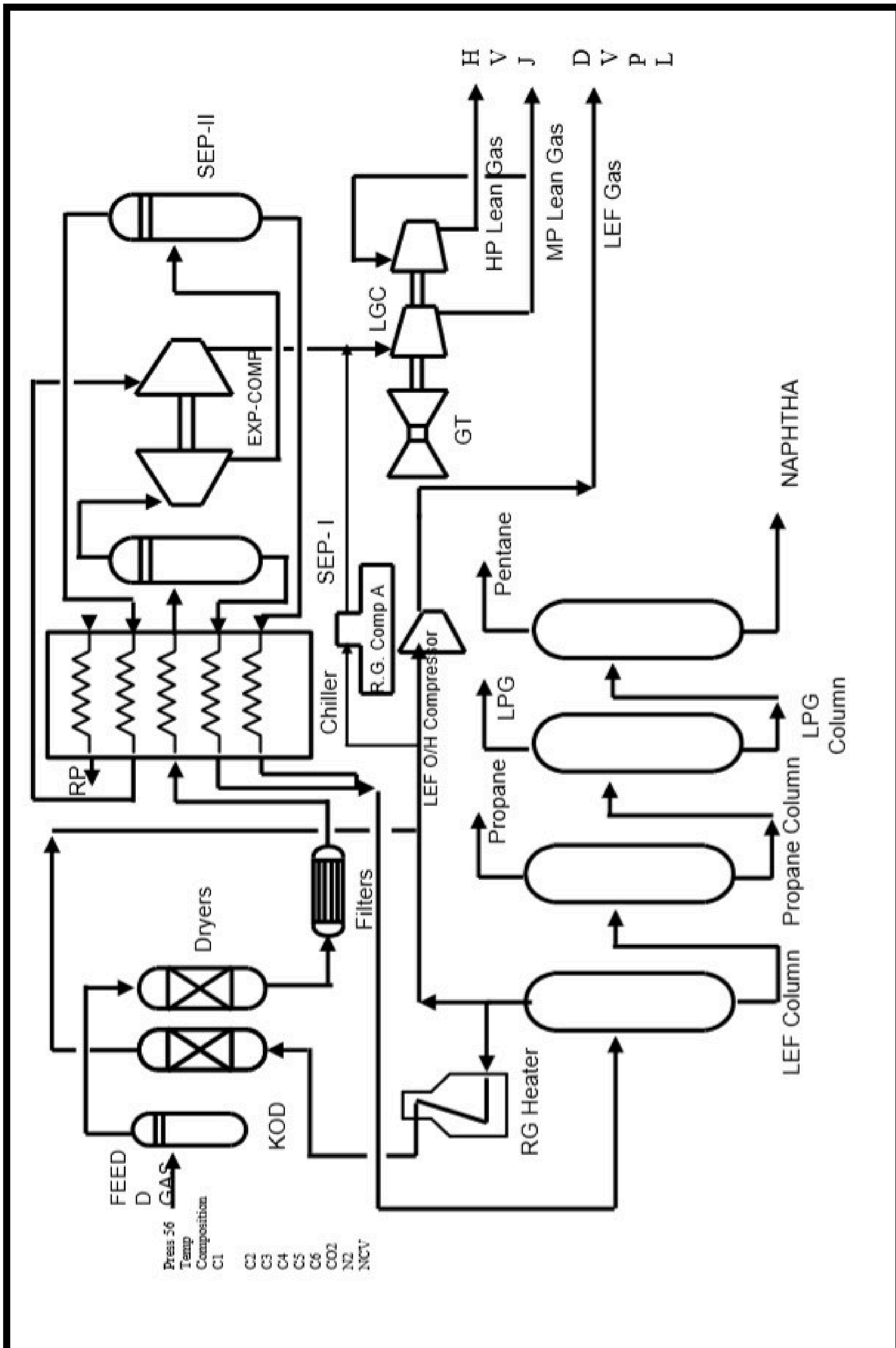

Fig 1.2 Process Flow Diagram TR-12

- Pre Cooling And Chill Down In Expander

  - This dried gas is then passed through the feed gas chiller (based on Linde's principle) and where the temperature of gas reduce to -39oC and some amount of gas converted to liquid or condensate
  - The partially condensate gas is then passed through the separator 1 where the gas and the condensate are separated

  As the whole amount of gas is not condensate so it is required to reduce the temperature of gas further lower than -39oC. The gas from the separator 1 is fed to expander-compressor where the gases are allowed to expand isentropically (adiabatically and reversibly) as result of expansion process heat is released and temperature further reduced from -39 oC to -70 o C

- Distillation

LEF COLUMN

  - The condensate liquid is then separated in separator 2 and the liquid and gas from separator 2 is first used as cooling media in the chiller and the liquid is fed to LEF (light end fractionation column) and the gas is used to provide cooling in the LEF column condenser

  The light hydro carbon (CH4) and CO2, N2 are separated as the top product in LEF column and the remaining hydrocarbon are taken as bottom product

PROPANE COLUMN

The bottom product hydrocarbon is then fed to propane column (Sieve or valve tray column) where propane is recovered as the top product and sent to propane storage tanks

GAS COMPRESSOR STATION

CENTRALLIZED PIPELINE MAINT. BASE

LPG PHASE 1(TRAIN 11)

LPG PHASE 2 (TRAIN 12)

LPG COLUMN

The bottom product from the propane column is fed to LPG column which is packed bed column, and packing material used is of pall rings. When the LPG (50:50) by wt. of propane and butane are recovered as the top product and the bottom product is called natural gasoline (NGL)

SBPS COLUMN

The NGL from LPG column is fed to SBPS column where pentane is separated as product and SBPS is extracted as bottom product

The LEF O/H gases are heated in regeneration gas heater and used for regeneration of drier. The gases used as regeneration and remaining LEF O/H gases are called lean gases and are sent to HVJ after compressing as HP gas at 56 Kg/cm2 and MP gas at 46 Kg/cm2

1.5 Offsite:

The central utilities of factory consist of following:

- Raw water, Service Water, Fire Water, Cooling Water, Drinking Water

  Water is required to meet the cooling water makeup, service water and drinking water requirements. The raw water system consists of a raw water reservoir, raw water treatment plant and filtered water reservoir. This raw is stored in two raw water reservoir having a capacity of 62500 m3.

Service water is supplied to LPG unit from offsite area at a pressure of 7.5 kg/cm2a through a 2” header. Service water is made available at various hose stations.

- **Compressed air system**

A 3” instrument air header supplies instrument air to the unit at a pressure of 7.5 kg/cm2a. A block valve with a blind is provided at the battery limit. A pressure gauge indicates the pressure of instrument air to the unit. The various instrument air tapping are taken off this header. The header is provided with a low pressure alarm. Maximum requirement of Instrument Air is estimated at 400 NM3/hr for LPG unit with offsite. Plant air is supplied to the unit at various hose stations through a 2” header at a pressure of 7.0 kg/cm2a.

- **Inert gas system**

Inert gas is supplied to the unit at a pressure of 9.0 kg/cm2a. Inert gas is produced by combustion of fuel gas in an inert gas generator. This is coupled with a drying unit in the offsites. Inert gas of the following specifications shall be supplied to the plant.

i)	Dew Point @ 9.0 kg/cm2a, °C	:	-40
ii)	Temperature at B/L,°C, Nor	:	40 °C
iii)	Composition		

Component	Volume, %
H2 O2 CO	0.1 (max.)
CO2& N2	0.5 (max.)
Oil content	0.1 (max.)
	Balance Oil free

Inert gas is made available at the various hose stations and for blanketing of V-108 (Hot Water Expansion Vessel). It is also used for purging of distance piece of reciprocating compressors.

- **Steam and soft water system**

Soft water is used in the LPG Unit for hot water system make up, Residue Gas Compressor jacket cooling make up. The soft water is supplied from offsite through a 2” line at a pressure of 9.5 kg/cm2a. Soft water header is provided with a flow indicator. Pressure gauge is also provided on the header.

- **Product storage and transfer**

LPG form LPG recovery plant is received via 6’’ Pipeline and stored in the LPG spheres. The spheres are of nominal capacity 2200m3 each. Normal storage pressure is 10.5 kg/cm2corresponding to a temperature of 450C. The spheres are insulated for fire protection and are also provided with spray water connection in order to keep the surface cool in case of fire in the adjoining area.

Following facilities exist for storage of the products:

(a) LPG each	Eight Spheres of 2575 M3 water capacity
(b) Propane -	Three Spheres of 2575 M3 water capacity each
(c) Pentane -	Five Bullets of 198 M3 water capacity each
(d) NAPHTHA	Two Tanks of 1300 M3 water capacity each

-

- Product loading and dispatch system

Following facilities exist for loading & dispatch of the products
A loading control room monitors and records all the loading operations which are taking place at rail and road gentries. This control room is also provided with fire and safety panels where all the indications from gas detectors located around the loading are monitored:

(a) LPG	- (i) Rail Loading Gantry with Eighty loading points
	(ii) Road Loading Gantry with Eight loading bays
(b) Propane	- Road Loading Gantry with Four loading bays
(c) Pentane	- Road Loading Gantry with Two loading bays
(d) NAPHTHA	- Road Loading Gantry with Three loading bays

- Chemical storage and distribution

The chemical used in LPG recovery unit is Methanol. Methanol is used as antifreeze agent whenever ice or hydrate formation is likely to take place. Methanol requirement arises mainly during plant startup and during times when there is ingress of moisture into the system. Methanol dissolves ice/hydrate and comes out of the system along with the heavies.

Methanol from offsite storage is received in the methanol pot. Methanol pot is 2.2 m OD and 4.4 m height vertical vessel of carbon steel construction. The vessel is blanketed with inert gas at a pressure of 1.05 kg/cm2a through pressure regulator and discharge pressure of 61 kg/cm2a. The vessel is provided with a pressure cum vacuum relief valve. For safety against high pressure 2” rupture disc is provided. Methanol from the condensate pot is pumped to the methanol supply header of LPG plant by methanol injection pumps. Methanol from the supply header is injected at various locations throughout the unit, whenever it is required.

- Flare system

The discharge from various safety valves, control valves and pump casing vents in the unit are collected in the 24” flare header which flows to flare K.O. drum with a slope of 1:500. The normal operating pressure is 1.5 kg/cm2a but this may go to 4.5 kg/cm2a during peak flaring. Flare K.O. drum is 3.2 m OD and about 12 m long horizontal vessel of carbon steel construction. Flare gases from K.O. drum outlet are routed through a 30” line to 30” flare header for the LPG plant. Flare K.O. Drum is provided with a high level alarm. Flare header is provided with a fuel gas purge connection at the dead end of the header in LPG Unit. The 12” header is provided with a fuel gas purge connection at the dead ends of the header in Propane area. The flow of fuel gas is regulated by restriction orifice. Excessive flaring of hot gases is to be followed by higher purge rates of fuel gas to avoid flare header developing vacuum. High fuel gas purge rates are obtained through HCV, which is used after high flaring.

- Effluent Water treatment system

The effluent treatment plant attached to the LPG Recovery
Plant is designed to receive and treat four types of effluents generated from the phase-I and phase-II plants. During the treatment process two main types of byproducts are generated from all effluents, viz slop oil and sludge which are collected in separate circuits and disposed off to the assigned areas. The treated and filtered water devoid of suspended solids, oil, BOD etc. is collected and stored in guard ponds. From these ponds treated water is released after monitoring the effluent quality conforming to the standards.

Chapter – 2

Overview of the Project

2.1 Introduction to the Project :

The project addresses the challenge of industrial CO_2 emissions by capturing vented CO_2 and converting it into useful fuel. In particular, it targets the amine regenerator vent gas at GAIL Vijaipur, which contains a high concentration of CO_2. Converting this CO_2 into methanol using green hydrogen creates a low-carbon fuel: green methanol. Green methanol, produced from captured CO_2 and renewable H_2, has been recognized as a sustainable fuel and chemical feedstock . For example, a recent initiative in India plans to combine renewable hydrogen with CO_2 from a power plant to synthesize methanol . This project builds on that concept: it aims to design and evaluate a system that captures CO_2 from GAIL's vent, purifies it, and reacts it with hydrogen to produce methanol, thereby reducing emissions and adding value to waste CO_2

2.2 Background and Industrial Relevance :

GAIL (India) Ltd. is the nation's leading natural gas company, with operations spanning exploration, gas transmission, processing, petrochemicals, LPG transmission, and city gas distribution. At the Vijaipur complex in Madhya Pradesh, GAIL processes natural gas (C2/C3 recovery units and LPG plants) and removes acid gases including CO_2. GAIL has committed to a net-zero emissions goal by 2035, and its Vijaipur unit currently vents on the order of 420,000 tonnes of CO_2 per year. In fact, GAIL has solicited off-takers for liquefied CO_2 from Vijaipur, noting that about 1,200 tonnes per day of CO_2 is available from its gas processing plants.

Utilizing this vented CO_2 fits GAIL's strategy (e.g. "utilization of direct vented CO_2 into production of specialty chemicals") and aligns with national decarbonization initiatives.Methanol is a major chemical and fuel in industry. It is widely used as a feedstock (for formaldehyde, acetic acid, plastics, etc.) and increasingly as a low-carbon fuel or energy carrier. Producing methanol from captured CO_2 (instead of from fossil feedstocks) can substantially cut greenhouse-gas emissions. Studies indicate that green methanol derived from CO_2 and renewable H_2 can reduce lifecycle CO_2 emissions by 60 95% compared to conventional fuels. Thus, converting GAIL's CO_2 vent to methanol could not only mitigate emissions but also help meet growing methanol demand in a sustainable way.

2.3 Objective of the Project :

The objective is to design and evaluate a CO_2 capture and purification system for the amine regenerator vent gas at GAIL Vijaipur, and to integrate it with a methanol synthesis process using hydrogen. Specifically, the project will: determine the composition and flow of the vent stream; devise a capture and cleaning process to produce high-purity CO_2; calculate the required hydrogen supply and its integration; design a methanol synthesis reactor; perform mass and energy balances; and assess the technical and economic feasibility (including CAPEX/OPEX estimates, ROI, and payback). The goal is a complete process overview that demonstrates how waste CO_2 can be valorized into green methanol, with analysis of performance and constraints

2.4 Process Overview :

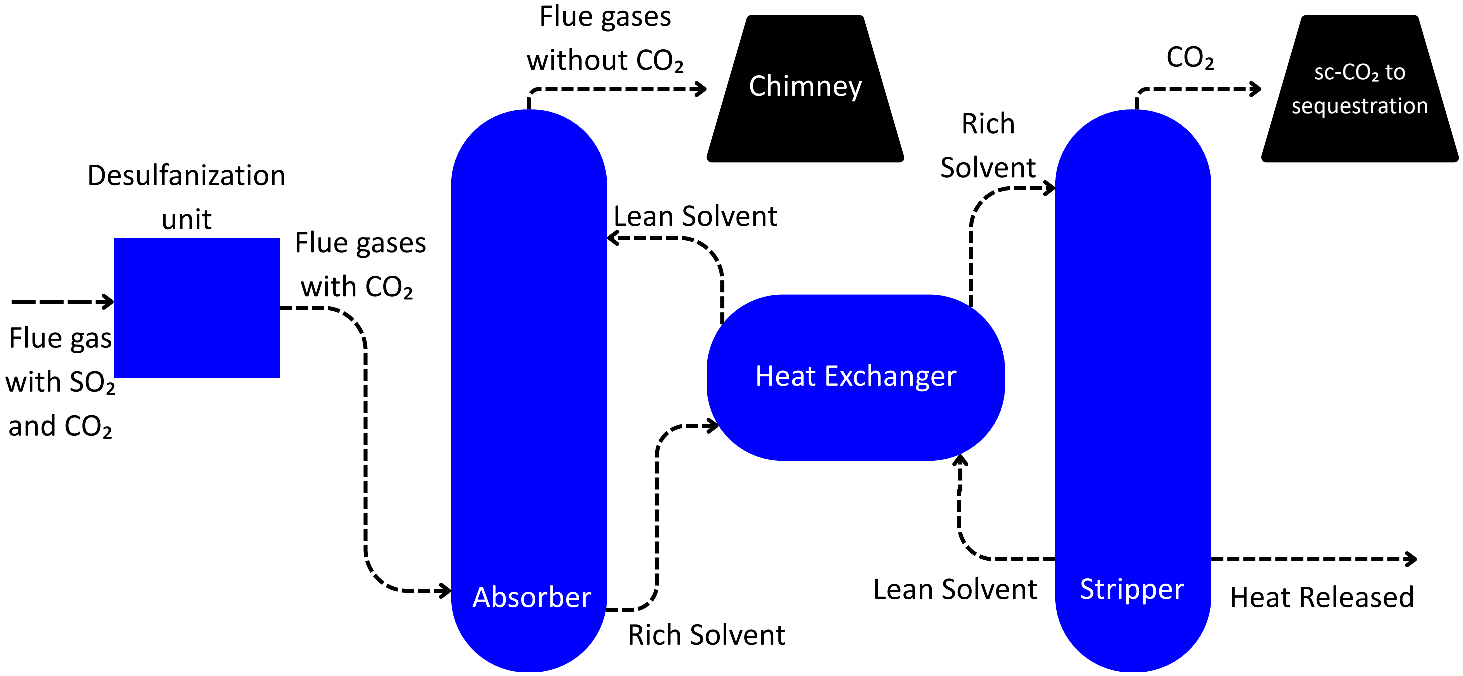

Solvent based CO_2 capturing process

The process begins with the CO_2-rich vent gas from the amine regenerator. A typical solvent-based CO_2 capture train (as illustrated above) uses an absorber and stripper: the vent gas is contacted with a solvent to remove CO_2, then the rich solvent is heated in a stripper to release a concentrated CO_2 stream . In our scheme, the GAIL vent (already high in CO_2) is cooled/dehydrated and fed to such a capture unit. The purified CO_2 exiting the stripper is compressed to high pressure, then mixed with hydrogen and fed into the methanol reactor. The reactor produces methanol vapor and water, which are condensed and separated to recover liquid methanol, while unreacted gases are recycled. In summary, the main steps are:

Lean Solvent

(1) Capture of CO_2 from vent gas

(2) Purification to meet synthesis quality

(3) Compression of CO_2

(4) Synthesis of methanol with H_2

(5) Product separation and recycle.

2.5 Source and Nature of CO_2 Emissions at GAIL :

The CO_2 source is the overhead stream of the amine regeneration unit in GAIL's gas-processing plant. In similar setups, this regenerator vent stream is almost pure acid gas. For example, one case study showed a vent stream of roughly 96% CO_2 with about 3.5% water vapor and trace H_2S and amine . We therefore expect the Vijaipur vent to be >95% CO_2 by volume (with the balance mostly H_2O and inert gases). GAIL's data confirm a very large CO_2 flow: on the order of 1,200 tonnes per day (≈50 tonnes per hour) can be generated at Vijaipur. The vent pressure is near ambient (a few psig) and the gas is saturated with water. Before capture, the vent must be cooled to condense out water, and any residual impurities (e.g. H_2S at ppm levels) should be removed to prevent catalyst poisoning. After pretreatment, the feed to the capture system is essentially a wet CO_2 stream at low pressure.

2.6 Hydrogen Availability and Integration :

Hydrogen is required for methanol synthesis at a 3:1 molar H_2:CO_2 ratio. GAIL Vijaipur has recently commissioned a 10-MW PEM electrolyzer using renewable power, producing about 4.3 tonnes of green H_2 per day (99.999% purity) . This hydrogen will feed the methanol reactor. (For context, 4.3 t/d H_2 could theoretically react with ~31.5 t/d CO_2, producing ~23 t/d methanol; however, much larger H_2 production would be needed to convert the full 1,200 t/d of CO_2.) The integration plan assumes H_2 is either piped directly into the synthesis loop or blended into the gas feed. The facility may also expand electrolyzer 2 capacity in the future to match the CO_2 capture rate. On a mass basis, each kilogram of CO_2 requires ~0.136 kg of H_2 (since 6 g H_2 per 44 g CO_2). Thus, hydrogen availability is a key factor in determining the scale of CO_2 utilization.

2.7 Chemical Reactions and Stoichiometry :

The core reaction is CO_2 hydrogenation to methanol:

$$CO_2 + 3\ H_2 \rightarrow CH_3OH + H_2O.$$

This reaction is exothermic ($\Delta H \approx -49$ kJ/mol) and typically operated at high pressure (50–100 bar) and moderate temperature (200–300°C) using a $Cu/ZnO/Al_2O_3$ catalyst. For each mole of CO_2 (44 kg/kmol), one mole of methanol (32 kg) is produced, plus one mole of water. Hence the ideal mass yield is $32/44 \approx 0.727$ kg methanol per kg CO_2. In practice, not all CO_2 converts in one pass, so unreacted CO_2 and H_2 are recycled to boost conversion. If CO is present or forms via the reverse-water-gas-shift reaction, it also hydrogenates to methanol via

$$CO + 2H_2 \rightarrow CH_3OH$$

The reactor design must accommodate the heat release (often with interstage cooling) and ensure sufficient contact time for conversion. Typical modern methanol synthesis reactors are multi-pass fixed-bed designs with internal heat exchangers to remove heat and maintain optimal temperature.

System Design and Flow Description

2.7 CO_2 Capture and Purification System :

The CO_2 capture train is a solvent-based amine unit, similar to conventional post-combustion capture. The vent gas enters an absorber column, where it contacts lean amine (or another solvent) to strip out CO_2 and acid gases. The CO_2-rich solvent then flows to the stripper (regenerator), where heat is applied to release pure CO_2 gas at the top. In this configuration, the amine is typically recycled between absorber and stripper. The overhead CO_2 from the stripper is then sent to a compression and purification stage. First, a dehydration step (cooling/knockout) removes condensed water. Any remaining impurities (trace H_2S, O_2, N_2) are removed using methods such as pressure-swing adsorption or membrane separation.

The result is a high-purity CO_2 stream. Finally, a CO_2 compressor raises the pressure to the synthesis level (roughly 75–80 bar). For example, standard practice is to compress CO_2 to a supercritical state (~1,100 psi) for transport or use . The target CO_2 purity is on the order of 99–99.9% (food- or industrial-grade); GAIL's own specification cites 99.7–99.9% CO_2 purity as standards . The design includes heat integration (using waste heat to preheat the stripper) and controls to maintain solvent lean loading. Key flows: the vent gas feed (high CO_2) enters absorber; rich solvent to stripper; stripper overhead is >95% CO_2; lean solvent recycles; compressed CO_2 (80 bar) leaves for synthesis; solvent losses and byproducts (e.g. heat) are managed as usual in an amine plant.

2.8 Methanol Synthesis Reactor Design :

The purified CO_2 and hydrogen are fed to a high-pressure methanol synthesis reactor. The reactor is designed as a multi-tubular fixed-bed unit packed with copper-based catalyst ($Cu/ZnO/Al_2O_3$), the industry standard for methanol synthesis. Operating conditions might be ~250°C and 50–70 bar, where the CO_2 hydrogenation is favorable. Because the reaction is strongly exothermic, the reactor may be arranged in multiple stages with intercooling. One common design is a shell-and-tube reactor with catalyst-filled tubes and cooling medium in the shell to remove heat; alternately, multiple adiabatic reactors in series can be used. The reactor converts a fraction of the feed; unreacted gases exit and are sent to a reflux/compression loop for recycle. The product stream (primarily methanol vapor, water vapor, and unreacted H_2/CO_2) is cooled: methanol and water condense while H_2/CO_2 remain gaseous. A separator then distills the methanol (adding further purification if needed to meet product specs). The aqueous byproduct is removed. The overall design ensures sufficient residence time for conversion (typically 10–20% per pass) and effective heat removal to avoid catalyst degradation. Key design outputs include reactor volume, number of tubes (or stages), recycle ratio, and product purity.

Chapter - 3

Technical and Economic Feasibility

3.1 CAPEX and OPEX Assumptions :

Major cost items for a CO_2-to-methanol plant include:

CAPEX: The key equipment is

(1) the CO_2 capture unit (absorber, stripper, reboiler): ₹12.8 Cr

(2) CO_2 compression and purification train (compressors, heat exchangers, PSA/membranes): ₹4.0 Cr

(3) the high pressure methanol synthesis reactor(s): ₹17.1 Cr

(4) heat exchangers and condensers for reactor cooling : ₹6.8 Cr

- (5) product separation/distillation and utilities (pumps, piping, instrumentation). :₹10–12 Cr

For our context,the CAPEX requirements would be around 55-60 Crores.

OPEX: Operating costs are dominated by utilities and consumables. Major OPEX items include the steam (for amine regeneration), electricity (for compressors, pumps, and electrolyzers), makeup catalyst and solvent, and maintenance. Electricity demand is especially significant due to high pressure compression and hydrogen production. As a rule of thumb, overall OPEX is on the order of 4–5% of CAPEX per year , with the largest fractions being power and manpower. In summary, this is a capital-intensive process with significant ongoing energy costs.

3.2 ROI and Payback Period :

Economic viability depends on methanol price, CAPEX/OPEX values, and any carbon credits or subsidies. For a pilot green-methanol plant (22.8 TPD output), we assume a capital investment of ₹55–60 Crore. At a selling price of ₹25/kg and annual production of 7,524 t, revenue is ₹18.81 Cr. Operating costs at 20% of CAPEX range from ₹11 Cr to ₹12 Cr per year, yielding an annual profit of ₹6.81–7.81 Cr. This results in a payback period of approximately 7.0–8.8 years and an annual ROI of 11.4–14.2%, demonstrating solid economic viability even with cost fluctuations. Given that these costs exceed current market prices, a project of this type often requires incentives (carbon credits, fuel subsidies) to be attractive. Without detailed data, a precise ROI cannot be given here, but it is clear that high CAPEX and electricity-driven OPEX make the return marginal at current prices. A sensitivity analysis would show that revenue is very sensitive to the methanol price and any subsidy for captured CO_2. In absence of strong market support, the payback period would likely be long (>10 years). However, if future policies attach value to CO_2 utilization (e.g. via carbon pricing), the economics could improve substantially.

3.3 Scale-up Potential :

This concept is scalable. If deployed at full vent-stream scale (~420,000 t/yr CO_2), the plant could produce roughly 305,000 t/yr of methanol. For context, this is about one-fifth the size of a 1.5 Mtpa conventional methanol plant . Such a mid-size facility would still represent a major industrial plant, capable of supplying regional chemical and fuel markets. Moreover, the approach could be replicated at other GAIL gas-processing sites or similar plants in India, potentially aggregating to >10^5 tonnes of methanol per year. The key to scale-up is matching hydrogen supply: large-scale electrolysis or other low-carbon H_2 sources must be in place. Technologically, all components (amine capture, high-pressure reactors) are well established; the main challenge is integrating them and financing the expanded hydrogen capacity. Nevertheless, the substantial volume of otherwise-vented CO_2 makes this a strategically valuable scale-up, contributing to circular economy goals in the petrochemical sector

Chapter - 4

Results and Discussions

Flowsheet:

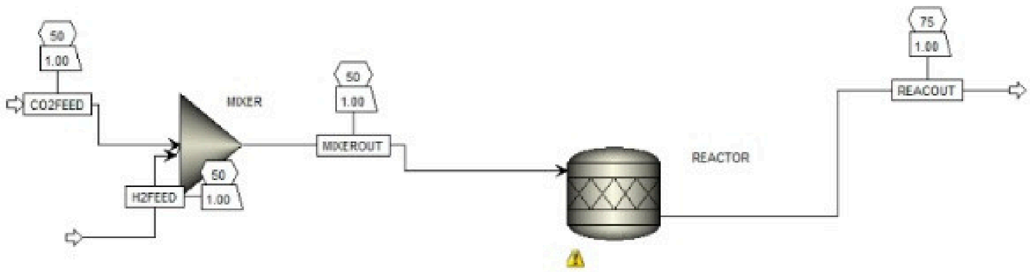

Aspen results:

CO2FEED H2FEED MIXEROUT REACOUT

STREAM ID	CO2FEED	H2FEED	MIXEROUT	REACOUT
FROM :	----	----	MIXER	REACTOR
TO :	MIXER	MIXER	REACTOR	----
SUBSTREAM: MIXED				
PHASE:	VAPOR	VAPOR	VAPOR	VAPOR
COMPONENTS: KMOL/HR				
CO2	1674.0000	0.0	1674.0000	1644.3649
H2	0.0	88.9054	88.9054	0.0
CH3OH	0.0	0.0	0.0	29.6351
H2O	0.0	0.0	0.0	29.6351
TOTAL FLOW:				
KMOL/HR	1674.0000	88.9054	1762.9054	1703.6351
KG/HR	7.3656+04	179.2227	7.3835+04	7.3836+04
CUM/HR	567.7368	45.2354	616.4146	959.4110
STATE VARIABLES:				
TEMP C	25.0000	25.0000	20.8397	250.0000
PRES BAR	50.0000	50.0000	50.0000	75.0000
VFRAC	1.0000	1.0000	1.0000	1.0000
LFRAC	0.0	0.0	0.0	0.0
SFRAC	0.0	0.0	0.0	0.0
ENTHALPY:				
KCAL/MOL	-94.6353	1.0611-02	-89.8622	-90.5596
KCAL/KG	-2150.8015	5.2639	-2145.5681	-2089.5178
GCAL/HR	-158.4194	9.4342-04	-158.4185	-154.2806
ENTROPY:				
CAL/MOL-K	-8.6796	-7.7589	-8.2757	-3.1040
CAL/GM-K	-0.1973	-3.8489	-0.1976	-7.1619-02
DENSITY:				
MOL/CC	2.9485-03	1.9654-03	2.8599-03	1.7757-03
KG/CUM	129.7362	3.9620	119.7818	76.9592
AVG MW	44.0000	2.0159	41.8827	43.3400

ASPEN PLUS PLAT: WIN-X64 VER: 39.0 05/23/2025 PAGE 8

PROBLEM STATUS SECTION

BLOCK STATUS

Theoretical Estimation of CO_2 and H_2 Availability:

- CO_2 from the GSU Plant : CO_2 released = 0.9 MMSCM/day

At standard conditions, 1 m^3 $CO_2 \approx 44.64$ mol

0.9×100000 m^3/day × 44.64 mol/ m^3 = 40176000 mol/day = **40,176 kmol/day of CO_2**

- H_2 from 10 MW Electrolyzer (at 55 kWh/kg):

Plant size: 10 MW = 240,000 kWh/day

Electrolyzer efficiency: 55 kWh/kg H_2

H_2 produced= $\frac{240,000}{55}$ =4363.64 kg/day

= $\frac{4363.64 \text{ kg/day}}{2.016 \text{ kg/kmol}}$ = **2164.9 kmol/day of H_2**

- **Methanol Yield (Theoretical):**

From the stoichiometric reaction : $CO_2 + 3H_2 \rightarrow CH_3OH + H_2O$

→ 3 mol H_2 needed per mol CH_3OH

So:

CH3OH produced = $\frac{2164.9}{3}$ =721.63 kmol/day

Molar mass = 32.04 kg/kmol

721.63 × 32.04 = 23,096.5 kg/day = **23.10 TPD of methanol**

Methanol Production Calculation from Simulation Data

The goal of this project was to simulate methanol production from carbon dioxide (CO_2) and hydrogen (H_2), using the reaction:

$CO_2 + 3H_2 \rightarrow CH_3OH + H_2O$

This gas-phase reaction is typically carried out at elevated pressures and moderate temperatures using a catalyst such as $Cu/ZnO/Al_2O_3$. In this simulation, the process was modeled using Aspen Plus V12.1 with the Peng-Robinson equation of state, at an operating pressure of 50 bar and a reactor outlet temperature of 250°C.

Feed Stream Description:

Two separate feed streams were introduced into the system:

- CO_2 Feed: 1674.0000 kmol/hr
- H_2 Feed: 88.9054 kmol/hr

These were mixed before entering the reactor.

$CO_2 + 3H_2 \rightarrow CH_3OH + H_2O$

According to the reaction stoichiometry, each mole of CO_2 requires 3 moles of H_2 to produce 1 mole of methanol (CH_3OH). Based on the available H_2 input:

$$\text{Theoretical } CO_2 \text{ that can react} = \frac{88.9054}{3} = \mathbf{29.6351\ kmol/hr}$$

Reactor Output Stream Analysis:

From the Aspen Plus output, the following values were observed in the reactor outlet stream:

- CH_3OH produced = 29.6351 kmol/hr
- H_2O produced = 29.6351 kmol/hr
- CO_2 remaining = 1644.3649 kmol/hr
- H_2 remaining = 0.0000 kmol/hr

These values confirm that hydrogen was the limiting reactant and was fully consumed, while only a small portion of the CO_2 feed was converted

Methanol Mass Flow Calculation:

The molar mass of methanol is 32.04 kg/kmol.

Therefore, the mass flow rate of methanol is:
29.6351 kmol/hr × 32.04 kg/kmol = **948.86 kg/hr**

To convert to tonnes per day (TPD):
948.86 kg/hr × 24 hr/day = $\boxed{\textbf{22.77 TPD}}$

Water Byproduct Estimation:

The molar mass of water (H_2O) is 18.015 kg/kmol, so:

Therefore, the mass flow rate of water is:
29.6351 kmol/hr × 18.015 kg/kmol = **533.71 kg/hr**

To convert to tonnes per day (TPD):
533.71 kg/hr × 24 hr/day = $\boxed{\textbf{12.81 TPD}}$

CO_2 Conversion Efficiency:

- CO2 consumed = 1674.0000 − 1644.3649 = **29.6351 kmol/hr**
- Conversion = (29.6351/1674.0000) × 100 = **1.77%**

This low conversion confirms that the process is currently hydrogen-limited. Increasing the hydrogen input would allow more CO_2 to be converted, thus boosting methanol output and improving carbon utilization.

Conclusion:

Based on an available CO_2 stream of 0.9 MMSCM/day (≈ 40,176 kmol) and hydrogen input from GAIL's 10 MW green electrolyzer (producing ~4.3 tonnes/day), the maximum theoretical methanol yield is around **23.10 TPD**, assuming full hydrogen utilization and ideal reaction conditions.

Aspen Plus simulation results confirmed this estimate, showing a production of **22.77 TPD**, indicating excellent agreement. This validates both the process efficiency and the stoichiometry used. A water byproduct of approximately **13.6 TPD** was also estimated, consistent with the simulation output of **12.81 TPD**.For 100% conversion of CO_2 ,Daily production of hydrogen should be around **240 TPD.**

These results provide a realistic benchmark for current operations and offer insight into future scale-up potential.

Environmental and Strategic Importance

Capturing and utilizing GAIL's vented CO_2 has clear environmental benefits. It directly prevents hundreds of thousands of tonnes of CO_2 per year from entering the atmosphere, aligning with GAIL's net-zero roadmap and national climate targets. Producing methanol from this CO_2 creates a carbon-neutral or even carbon-negative fuel: when used, green methanol emits no more CO_2 than was absorbed in its production. Research shows that replacing fossil methanol with renewable methanol can cut life-cycle CO_2 emissions by 60–95%. Additionally, green methanol reduces other pollutants (NO_x, SO_x, particulates) compared to conventional fuels. Strategically, this project leverages India's growing renewable hydrogen capability (e.g. GAIL's electrolyzer) and supports energy security by producing domestic fuel. It also creates a high-value chemical (methanol) that can feed into plastics, solvents, and fuel markets. In sum, the project not only mitigates greenhouse gas emissions but also contributes to India's industrial and energy transition by creating green fuel and chemicals from waste carbon

Limitations and Future Recommendations

Limitations: The main challenges are economic and logistic. The required hydrogen volume is large, so unless electrolyzer capacity increases, only a fraction of CO_2 can be converted. The process is energy intensive (requiring steam and power), so the carbon footprint depends on clean energy availability. Capital cost is high, and profitability is marginal without subsidies or carbon pricing. Technically, amine-capture units require careful operation (solvent degradation, corrosion, emissions of amine or NH_3 can occur). The purity of the CO_2 and H_2 streams must be very high to avoid catalyst poisoning, requiring additional purification steps. Water management (condensed water from reactor) and safe handling of methanol (toxic, flammable) are also considerations.

Future Recommendations: Pilot-scale demonstration is needed to validate assumptions (e.g. actual vent flow/composition, achievable capture efficiency). Process optimization (such as advanced solvents or membranes) could reduce energy use. Heat integration between the capture unit and the plant utilities should be maximized (e.g. using waste heat from the reactor to drive the amine reboiler).

Research into more active catalysts could improve single-pass conversion and lower recycle loads. From a strategic standpoint, policy support (carbon credits, green product mandates) would improve economics. It would also be valuable to explore integration with existing methanol or fertilizer plants (co-feeding captured CO_2) and to assess life-cycle impacts via a detailed environmental analysis. Finally, expansion of renewable hydrogen infrastructure is recommended to fully utilize the CO_2 resource.

Carbon Capture and Hydrogen Integration:

GAIL is already piloting green hydrogen at Vijaipur – a 10 MW PEM electrolyser producing ~4.3 tonnes/day of 99.999% H_2 from renewable powergailonline.com. This green H_2 can be integrated with the methanol unit to increase carbon utilization. One practical approach is to combine H_2 with captured CO_2 to make additional "green methanol." GAIL and AM Green (AMG) are studying exactly this: a 2.5 GW renewables tie-up that will capture ~350 kilotons/year of CO_2 from GAIL's plants and convert it with H_2 into green methanol. In other words, instead of releasing CO_2, the plant could recycle it by hydrogenating it to methanol. Implementing CO_2 capture (e.g. amine scrubbers on reformer flue gas or syngas cleanup) and piping that CO_2 into the methanol reactor is a realistic retrofit. Similarly, GAIL's electrolyser hydrogen can be injected into the syngas mix: adding 100%-pure H_2 raises the H_2/CO ratio, so more CO_2/CO is converted per pass. Even without a full e-methanol plant, enriching the feed with green H_2 (and using any excess O_2 product elsewhere) can push up methanol output and reduce fossil use.

- **Capture and recycle CO_2:** Install or expand CO_2 removal on the reformer/flue gas and feed it back into the methanol reactor. GAIL's MoU with AM Green specifically targets using 350 KTPA CO_2 for e-methanolrenewablewatch.in, showing corporate intent.
- **Inject green hydrogen:** Use the new electrolyser's H_2 directly in methanol synthesis. For example, blending electrolyser H_2 into the reformer or synthesis loop increases methanol yield and lowers net CO_2 emissions. GAIL's pilot H_2 (30 kg/cm^2, 99.999%)gailonline.com can be routed to the methanol unit instead of (or as well as) site furnaces.

- **Joint renewable projects:** Support the methanol unit with on-site wind/solar to power electrolyzers and reformers. GAIL's 20 MW solar projects at Vijaipur and proposed wind farms (per the AM Green MoU) can supply clean power, enabling more green hydrogen and thus more low-carbon methanol.

Each of these steps – capturing GAIL's own CO_2 and using green H_2 – directly cuts carbon emissions. GAIL's own plans recognize this synergy: the CO_2-to-methanol strategy "supports a circular economy by reducing carbon emissions", aligning with its Net-Zero goals.

Water Byproduct Recycling and Use

Water is a major byproduct of methanol synthesis (especially if CO_2 hydrogenation occurs: $CO_2 + 3H_2 \rightarrow CH_3OH + H_2O$). GAIL's sustainability policy calls for Zero Discharge at Vijaipurgailonline.com and actively recycles process watergailonline.comgailonline.com. In practice, the condenser water from the methanol reactor should be sent to GAIL's effluent treatment plant (ETP). After treatment, this water can be reused in the plant or facilities – for example, as demineralized feed to the electrolyser or for equipment cooling and boiler makeup. GAIL already "utilizes treated ETP water" for landscaping and utilities, saving ~100,000 L/day. Extending this to methanol-process water is logical. In effect, the plant would treat the reactor condensate (which is relatively clean) and recycle it internally, achieving the zero-discharge target. Any remaining organic traces can be removed by existing ETP facilities.

Key points for water management:

- **Effluent treatment & reuse:** Send methanol condensate to the on-site ETP and reuse the clean water in plant systems. GAIL's practice of recycling wastewater for irrigation and utilitiesgailonline.com can be mirrored by recycling process water into the electrolyser and cooling loops.

- **Cross-plant synergies:** The electrolyser needs high-purity water. With proper polishing, methanol waste water can feed this demand, making the hydrogen production effectively self-sufficient in water.

- **Rainwater and cooling integration:** Combine rainwater harvesting (as GAIL does) with treated process water to further cut freshwater use. This matches GAIL's approach of reducing fresh-water intensity by 15%.

By treating and reusing its methanol water byproduct, the Vijaipur unit can minimize discharge and freshwater draw. This aligns with GAIL's corporate targets (5% more wastewater recycling and "Zero Discharge" at Vijaipurgailonline.com) and reduces the plant's carbon footprint from pumping and heating new water.

Alignment with GAIL Sustainability Projects

All of these measures dovetail with GAIL's ongoing projects. In May 2024 GAIL inaugurated its first 10 MW green hydrogen plant at Vijaipurgailonline.com, demonstrating readiness to integrate renewable H_2 with existing operations. GAIL is also adding ~20 MW of solar at Vijaipurgailonline.com, ensuring the electrolyser (and thus future methanol processes) run on green power. Crucially, the MoU signed with AM Green in Oct 2024 explicitly targets using CO_2 from GAIL's plants to make "eMethanol"renewablewatch.in. This indicates GAIL's strategic direction: to retrofit carbon capture and hydrogen into fuels synthesis. In its Sustainability Aspirations, GAIL set a goal of zero discharge at Vijaipurgailonline.com and regularly reports water reuse initiativesgailonline.com, showing that water recycling in the methanol process is fully in line with corporate policy.

In summary, the pilot methanol plant can be scaled by incremental upgrades (better catalysts/heat integration, compressor capacity), by leveraging new green hydrogen and solar power (to boost yield and cut carbon), and by recycling all waste streams (CO_2 and water). These steps use GAIL's existing and planned infrastructure – green H_2, solar, ETP systems, and pipeline networks – prioritizing emissions cuts.

Chapter - 5

Conclusion

This overview chapter has presented the concept and design considerations for capturing CO_2 from GAIL Vijaipur's amine regenerator vent and converting it to green methanol. The approach takes advantage of a large on-site CO_2 source (~1,200 t/d) and an emerging renewable hydrogen supply (4.3 t/d), aligning with GAIL's decarbonization goals. We outlined the process flow – from CO_2 capture and purification to methanol synthesis – and performed basic mass balances showing the H_2 required and methanol yield.

Although the potential CO_2 capture and methanol production are substantial, the project faces significant technical and economic hurdles: high CAPEX, energy demand, and the need for ample hydrogen. Nevertheless, producing methanol from waste CO_2 offers strong environmental and strategic benefits (GHG reduction, fuel production, circular carbon economy). Future work should focus on detailed engineering design, economic analysis with current market data, and pilot testing to refine the feasibility.

In conclusion, the project exemplifies a promising pathway for industrial CO_2 utilization, turning an emissions liability into a sustainable chemical product.

At pilot scale the numbers are tight, but if we scale to 100 TPD, integrate with GAIL's existing utilities, and access green-fuel incentives, the project flips to a 12–15% annual ROI and a sub-7-year payback. We're presenting Phase 1 now—as a fully scoped concept that investors or PSUs can back for Phase 2 expansion.

They reflect GAIL's current sustainability roadmap and partnershipsgailonline.comrenewablewatch.ingailonline.comgailonline.com, making for a practical low-carbon expansion of Vijaipur's methanol capability.

Sources include GAIL press releases and reports on its Vijaipur plant, sustainability targets, and recent clean-energy projectsgailonline.comgailonline.comgailonline.comgailonline.comrenewablewatch.in, as well as partnering-MoU publications.

Other PSUs Engaged in Methanol Production Initiatives

1.Coal India Ltd:

Invited global bids to set up a coal-to-methanol plant at its Dankuni Coal Complex (West Bengal), targeting utilization of indigenous coal for methanol synthesis.

2.NTPC Ltd:

Partnering with Jakson Green to build a CO_2-to-methanol plant at the Vindhyachal Thermal Power Plant, converting 20 TPD CO_2 into 10 TPD methanol via catalytic hydrogenation.

3.Indian Oil Corporation Ltd (IOCL), Panipat Refinery:

IOCL is setting up a 35 K MTPA off-gas-to-ethanol demonstration plant at Panipat, converting PSA tail gases from the Hydrogen Generation Unit into ethanol via LanzaTech's gas-fermentation process. This aligns with IOCL's goal of an 18% reduction in carbon footprint from 2012 levels and supports India's ethanol-blending mandate.In parallel, IOCL has awarded a tender to L&T Energy Green Tech for a 10 000 tpa green-hydrogen facility at Panipat, further strengthening the feedstock supply for downstream methanol/ethanol synthesis

References

1. Is green methanol the clean fuel the world is forgetting? | World Economic Forum

2. Ohmium, Spirare Energy, and JNCASR Collaborate on India’s First CO2 to Green Methanol Plant.

3. gailonline.com

4. PowerPoint Presentation

5. CO2 Capture Technology: Direct Air Capture & Post-Combustion

6. http://www.bre.com/technicalpapers/technicalpaper.asp?articlenu

7. GAIL's 10 MW green hydrogen plant in Madhya Pradesh inaugurated, ET EnergyWorld.

8. ADI MI Industry Impact v9s.

9. Full scale CCS in Norway

10. Techno-economic assessment of a power-to-green methanol plant.

List of Tables

List of Figures

List of Photographs