Module 3: Labs: Thermal simulation of semiconductor packages with Ansys

L10: Introduction and getting started with Ansys Electronics Desktop

Ansys electronic desktop is used for designing and analyzing high speed electronic circuits and systems. It is very useful as it combines electromagnetic, signal integrity, thermal and electromechanical simulation tools into a single integrated platform.

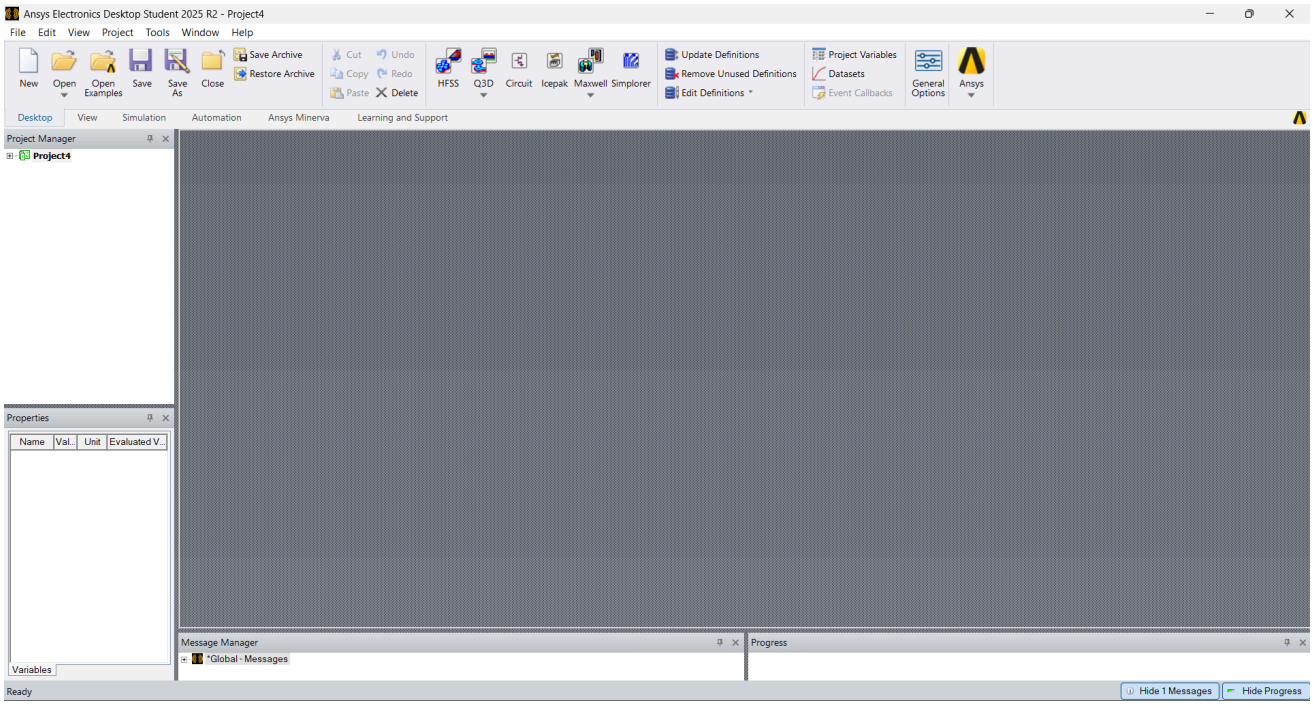

The above image represents the AEDT landing page upon opening the tool.

L11: Setting Up a Flip-chip BGA package

An existing FC-BGA package is used within the **Icepak toolkit** for this exercise.

A flipchip BGA package is selected by using **Icepak → Toolkit → Geometry →Packages → Flipchip_ BGA.**

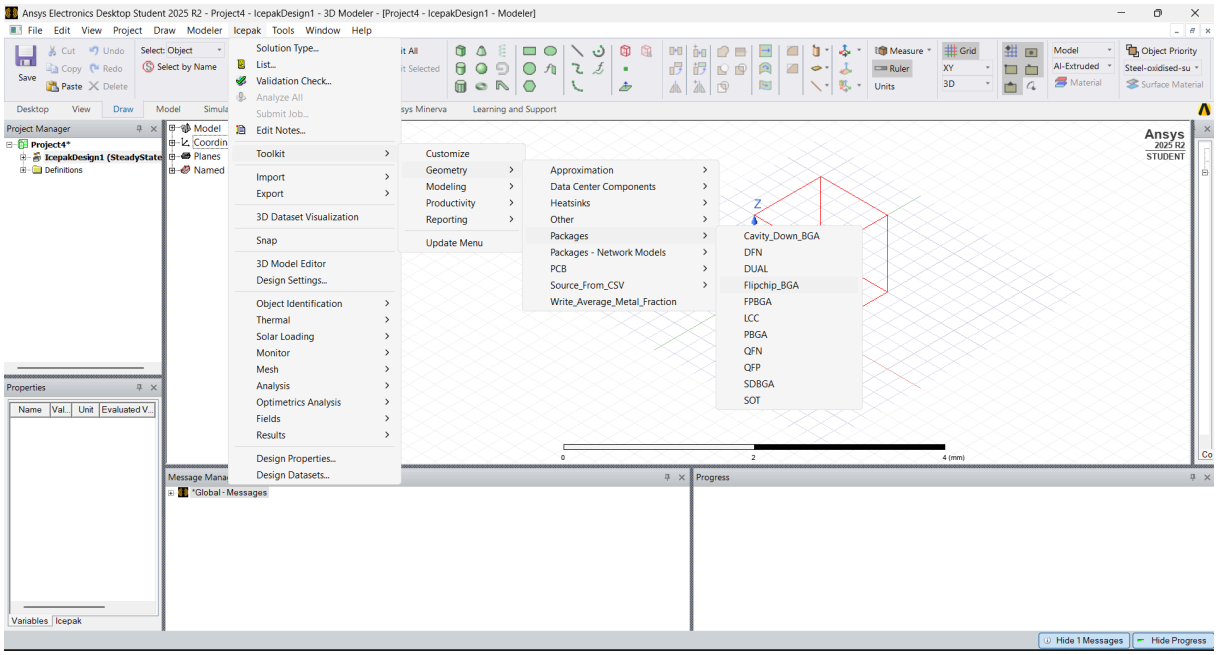

A package configuration window opens up where all the package aspects can be configured. Once configured click OK to generate the model.

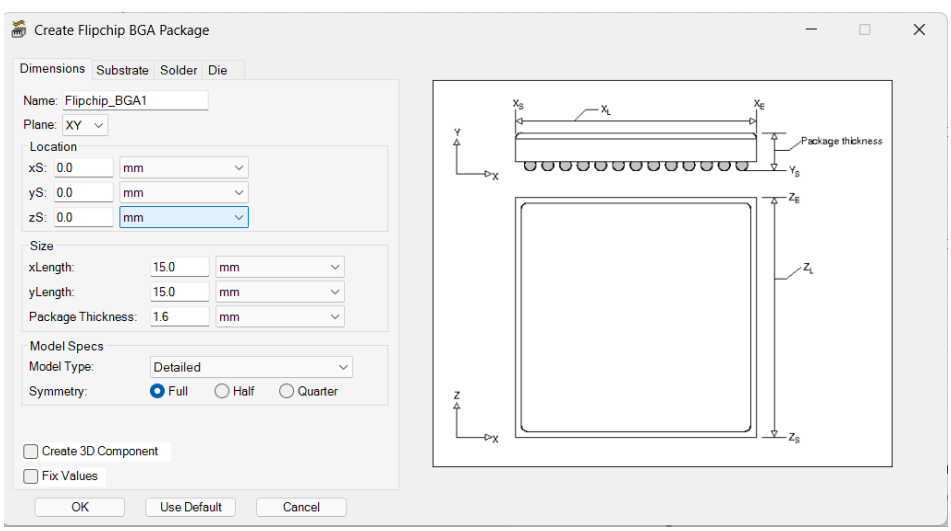

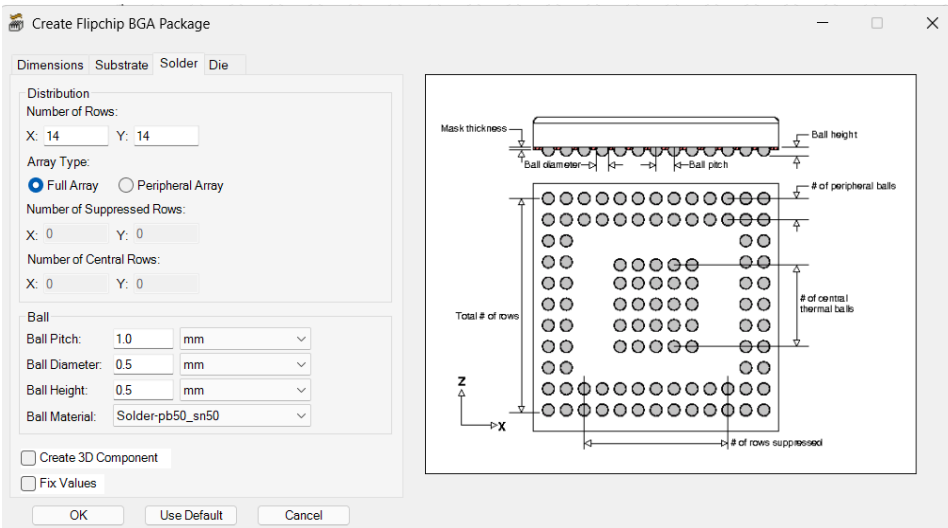
Create Flipchip BGA Package
Dimensions
Substrate
Solder
Die
Distribution
Number of Rows:
X: 14
Y: 14
Array Type:
Full Array
Peripheral Array
Number of Suppressed Rows:
X: 0
Y: 0
Number of Central Rows:
X: 0
Y: 0
Ball
Ball Pitch: 1.0 mm
Ball Diameter: 0.5 mm
Ball Height: 0.5 mm
Ball Material: Solder-pb50_sn50
Create 3D Component
Fix Values
OK
Use Default
Cancel
Mask thickness
Ball height
Ball diameter
Ball pitch
# of peripheral balls
Total # of rows
# of central thermal balls
Z
X
# of rows suppressed

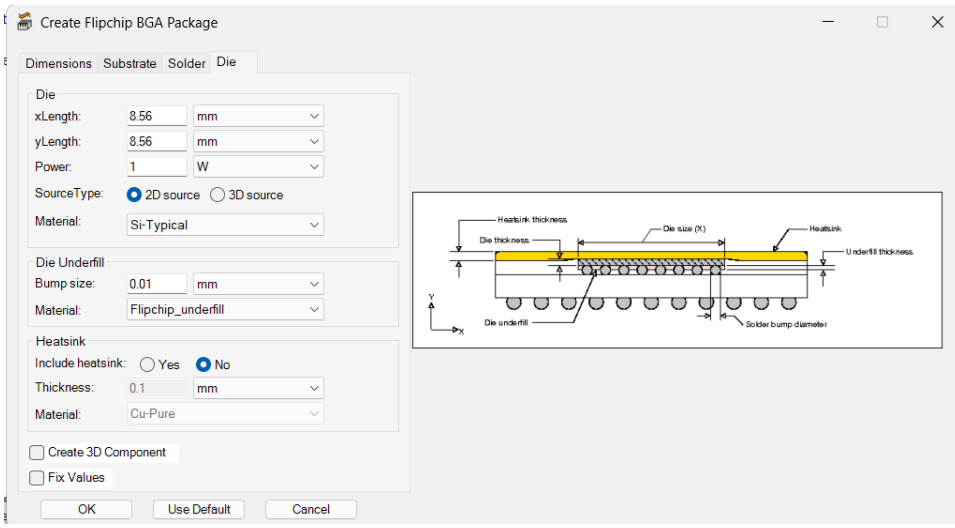
Create Flipchip BGA Package
Dimensions
Substrate
Solder
Die
Die
xLength: 8.56 mm
yLength: 8.56 mm
Power: 1 W
SourceType: 2D source 3D source
Material: Si-Typical
Die Underfill
Bump size: 0.01 mm
Material: Flipchip_underfill
Heatsink
Include heatsink: Yes No
Thickness: 0.1 mm
Material: Cu-Pure
Create 3D Component
Fix Values
OK
Use Default
Cancel
Heatsink thickness
Die thickness
Die size (X)
Heatsink
Underfill thickness
Die underfill
Solder bump diameter
Y
X

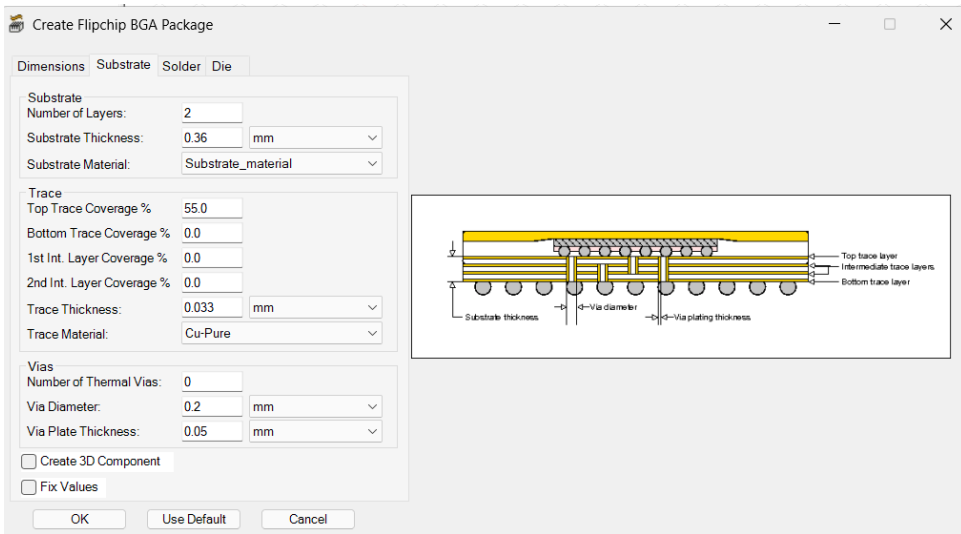
Create Flipchip BGA Package
Dimensions
Substrate
Solder
Die
Substrate
Number of Layers: 2
Substrate Thickness: 0.36 mm
Substrate Material: Substrate_material
Trace
Top Trace Coverage % 55.0
Bottom Trace Coverage % 0.0
1st Int. Layer Coverage % 0.0
2nd Int. Layer Coverage % 0.0
Trace Thickness: 0.033 mm
Trace Material: Cu-Pure
Vias
Number of Thermal Vias: 0
Via Diameter: 0.2 mm
Via Plate Thickness: 0.05 mm
Create 3D Component
Fix Values
OK
Use Default
Cancel
Top trace layer
Intermediate trace layers
Bottom trace layer
Substrate thickness
Via diameter
Via plating thickness

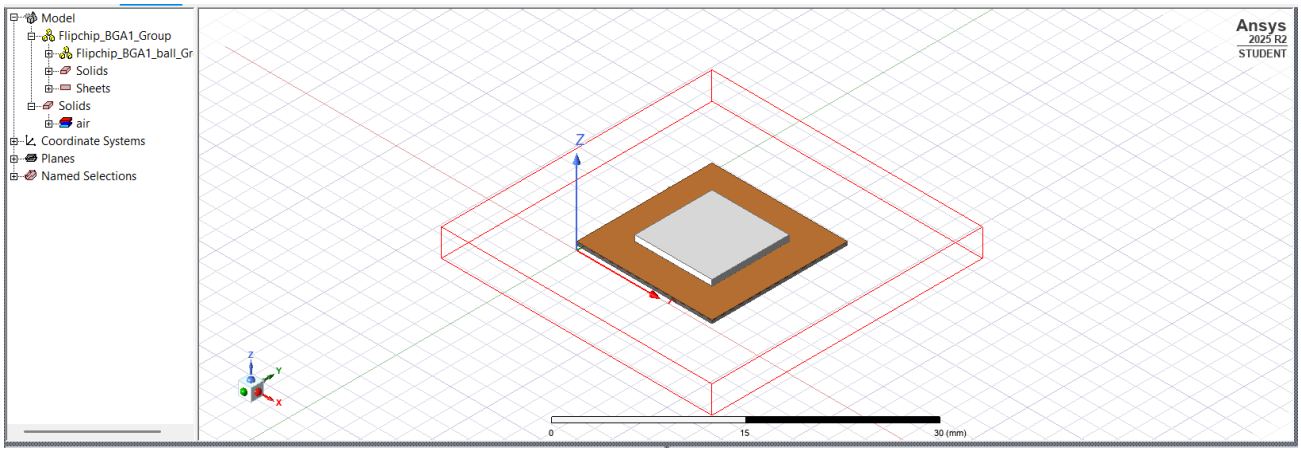

Generated model after setting configurations.

L12: Material definitions and thermal power sources

The material types and the definition for different components of the model is reviewed

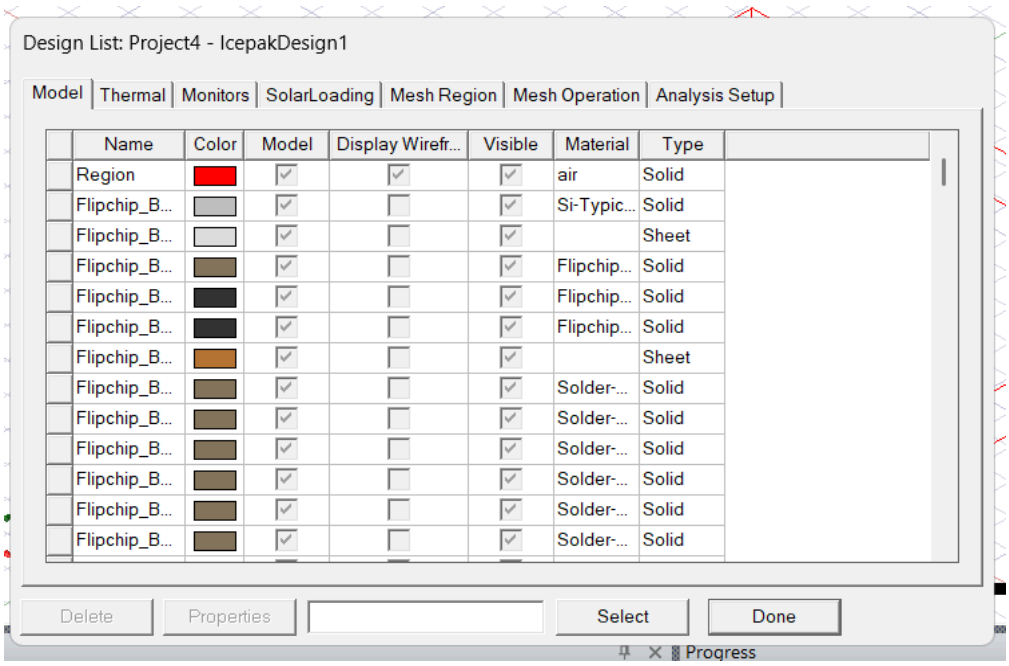

The “Thermal” section is expanded, BGA1_die_source is opened and thermal condition is set.

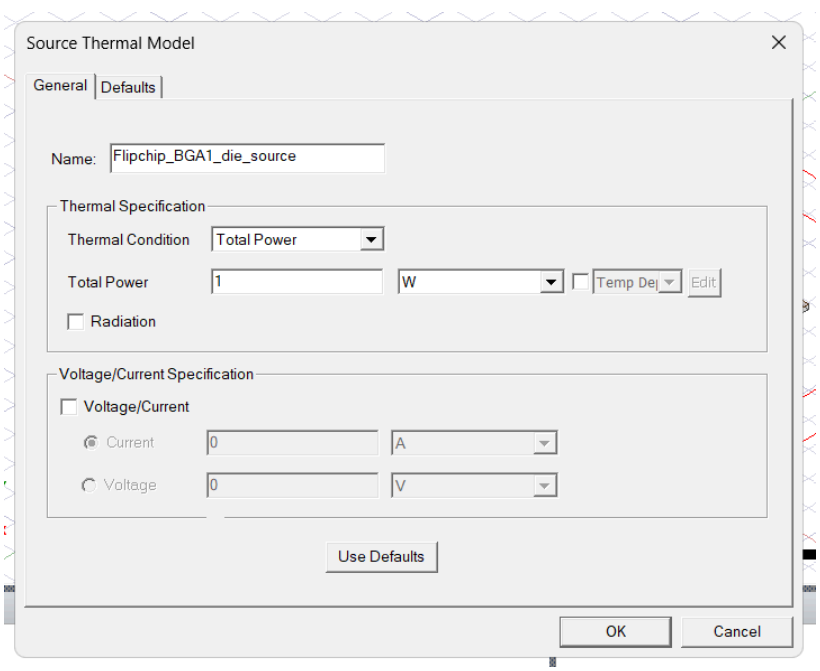

A source thermal model is assigned for the substrate by right selecting **Models→Flipchip_BGA1_Group→Solids** and assigning a thermal source.

The thermal temperature is set to fixed and temperature as ambient.

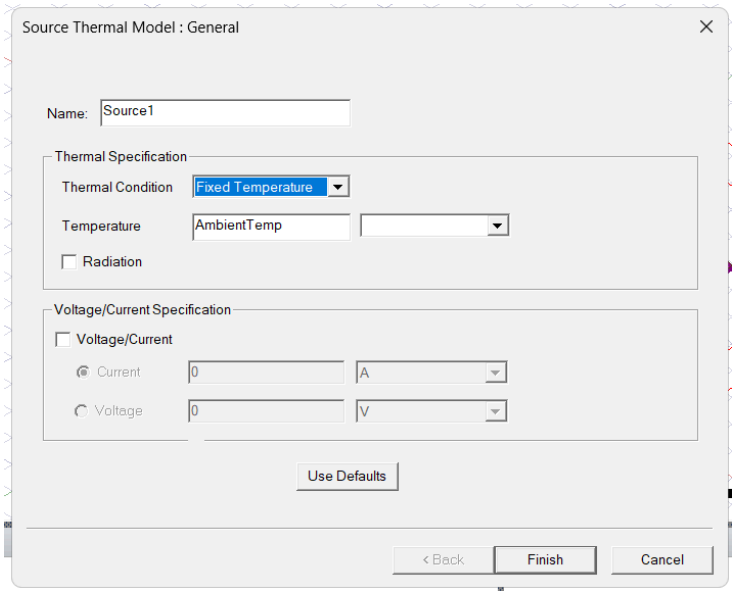

Thermal monitors are setup for substrate by choosing **Models→Flipchip_BGA1_Group→Solids** and selecting **Assign monitor→point.** In the sub window, select temperature. The steps are repeated again to add thermal monitors for die and die underfill.

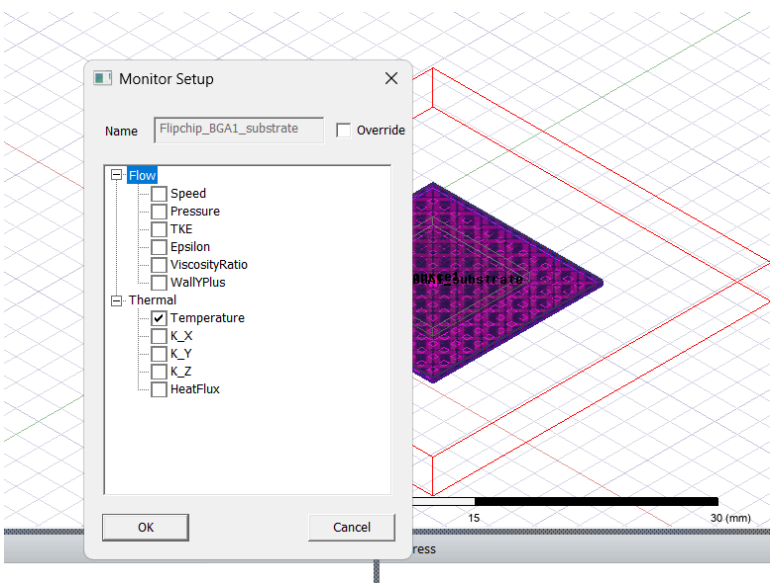

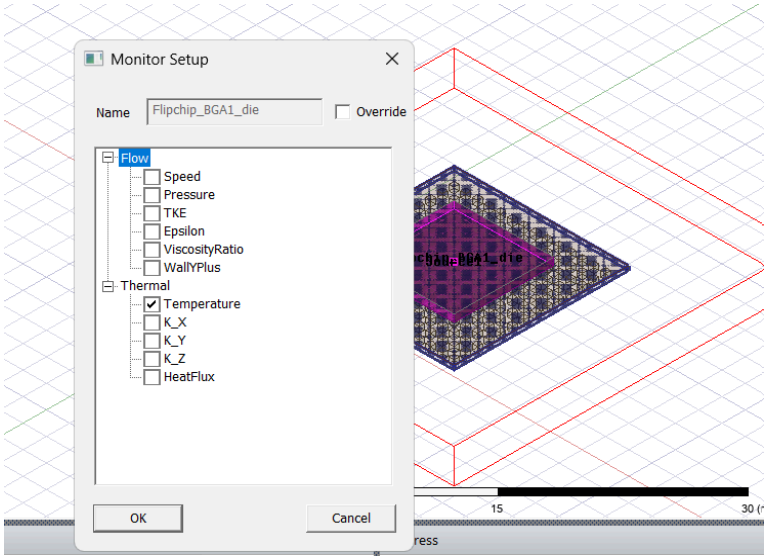
Monitor Setup
Name
Flipchip_BGA1_die
Override
Flow
Speed
Pressure
TKE
Epsilon
ViscosityRatio
WallYPlus
Thermal
Temperature
K_X
K_Y
K_Z
HeatFlux
OK
Cancel
15

L13: Meshing and running thermal analysis

Mesh is generated by going to the Simulation tab and selecting Generate Mesh.

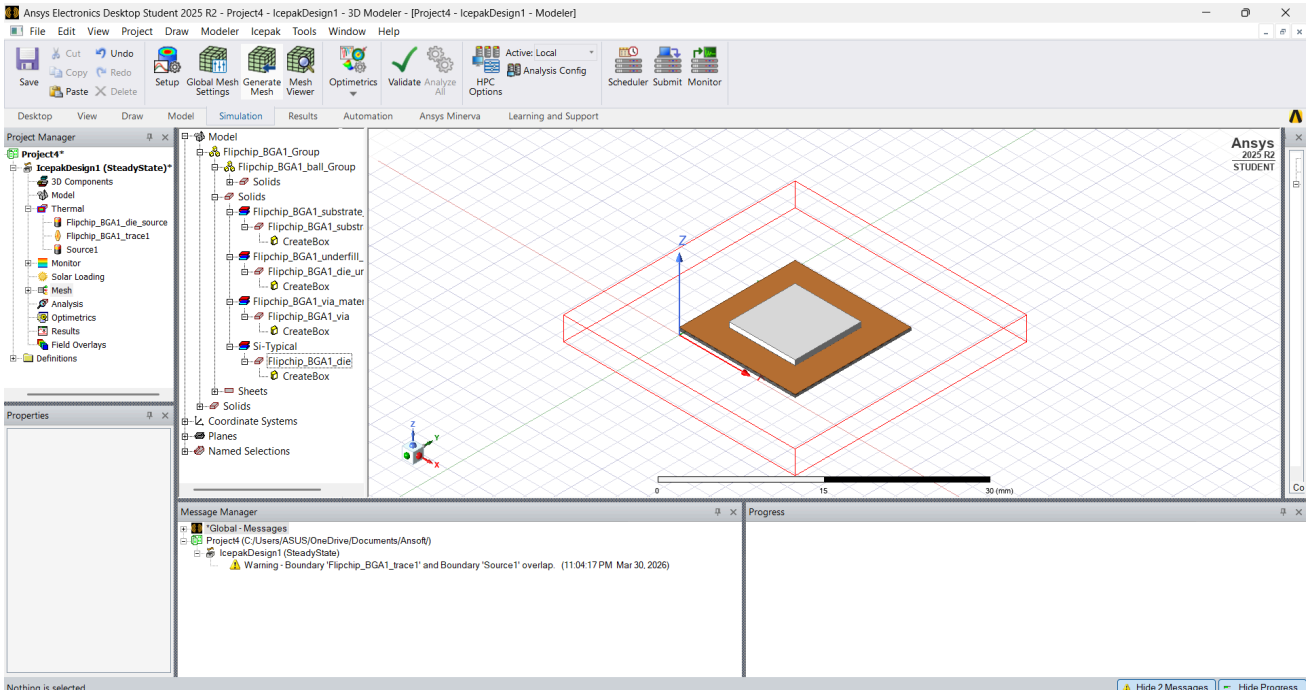

Once the mesh is generated we can review the quality metrics of mesh such as face alignment, skewness and volume.

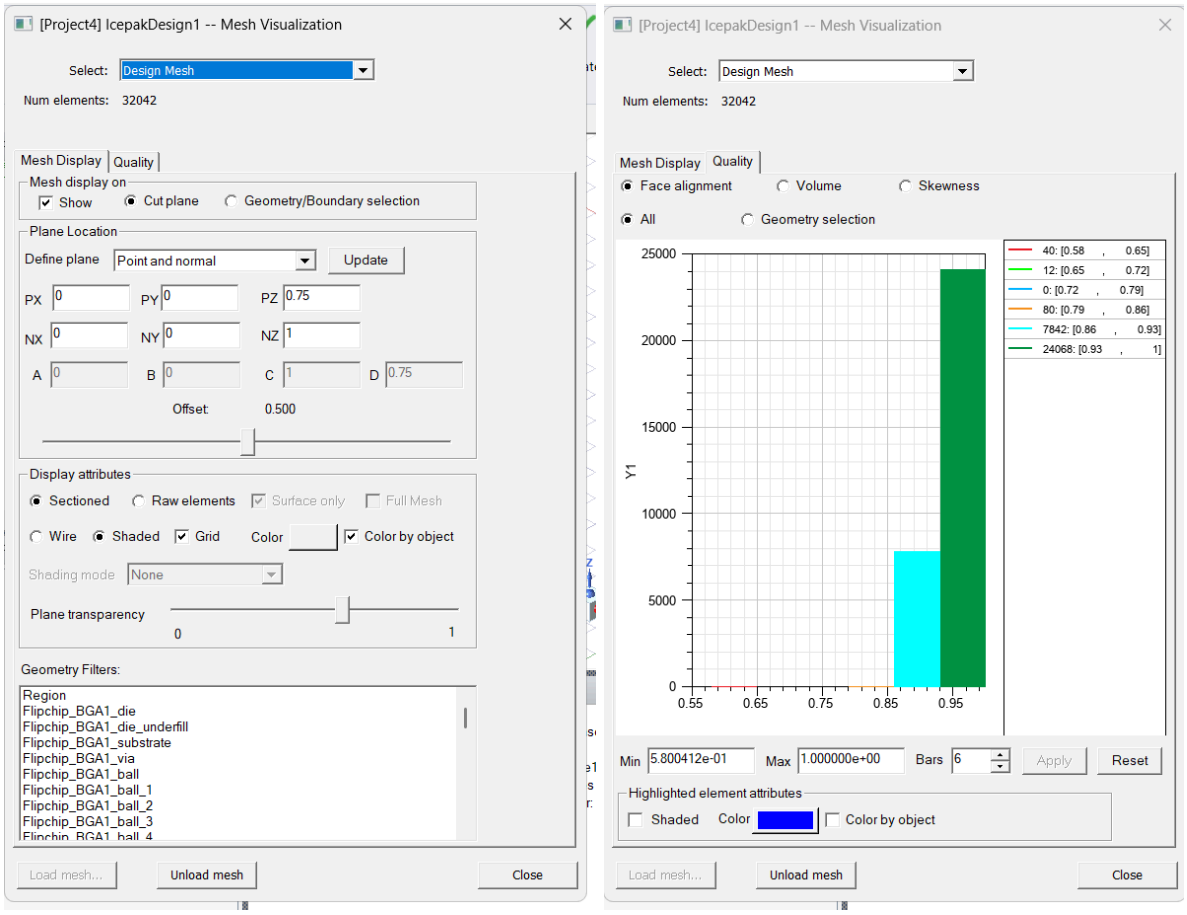

Mesh Display and face alignment Quality after mesh generation is completed are displayed here.

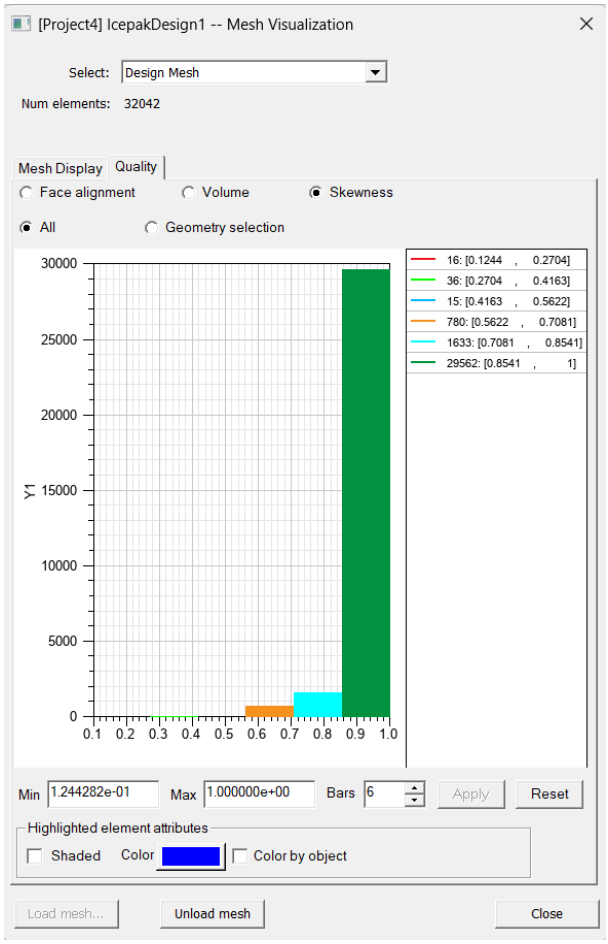

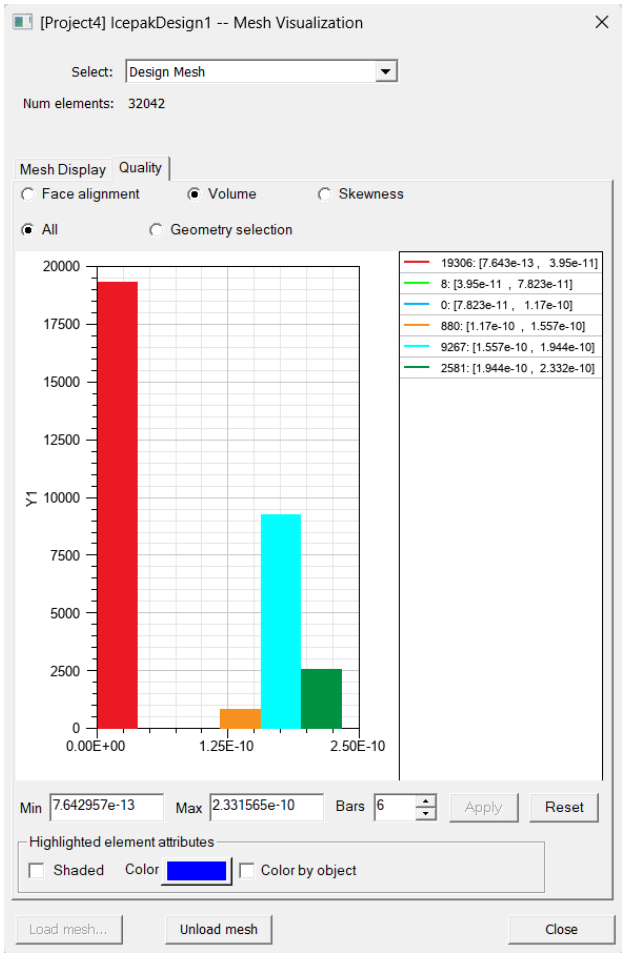

The skewness and volume in the quality tab is also displayed here

Thermal analysis is added to this setup by choosing the Analysis option under Project manager and selecting Add analysis setup and configuring as required. Only the default settings are chosen for this project, so no changes are made.

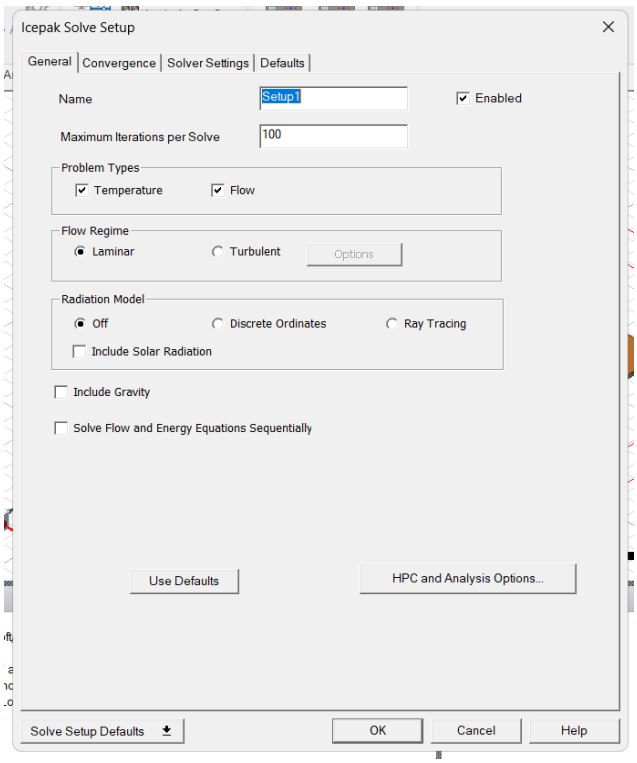

Click on validate button to ensure all checks are validated successfully

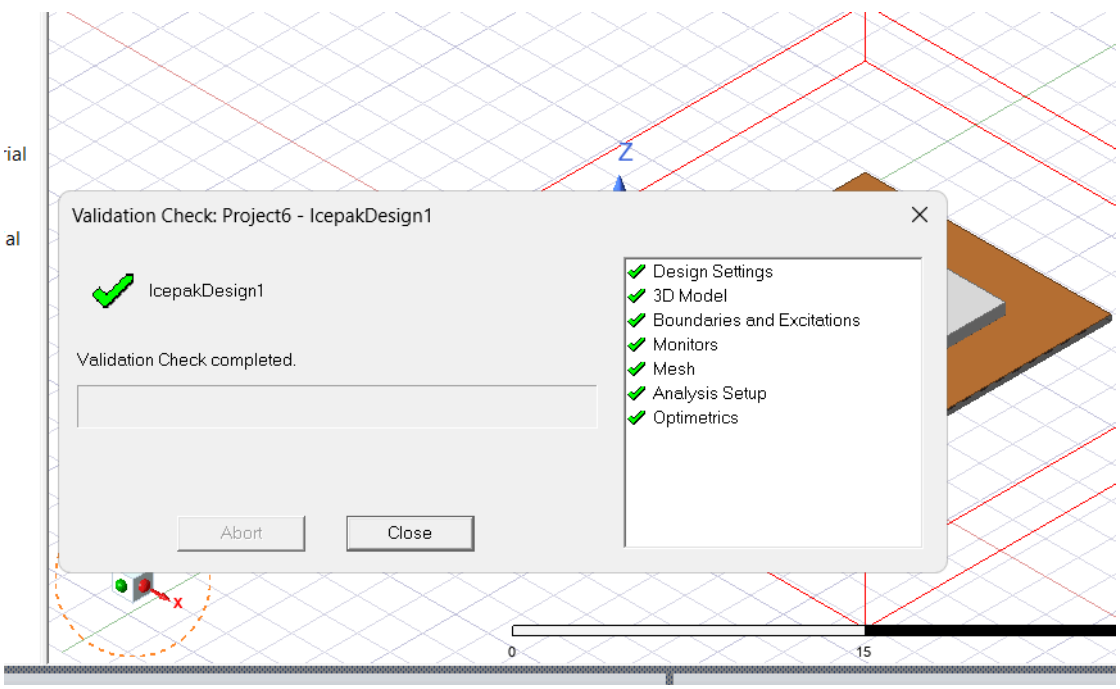

L14: Viewing results and exploring other package types

- Click on analyze all button in the top, wait for simulation to complete.
- Select the FC-BGA package in 3D view
- Right click on it, select **Plot fields→Temperature→Temperature**
- Configure the options by specifying name, folder, plot on surface only and enabling Surface smoothing

Fieldplot-Top view

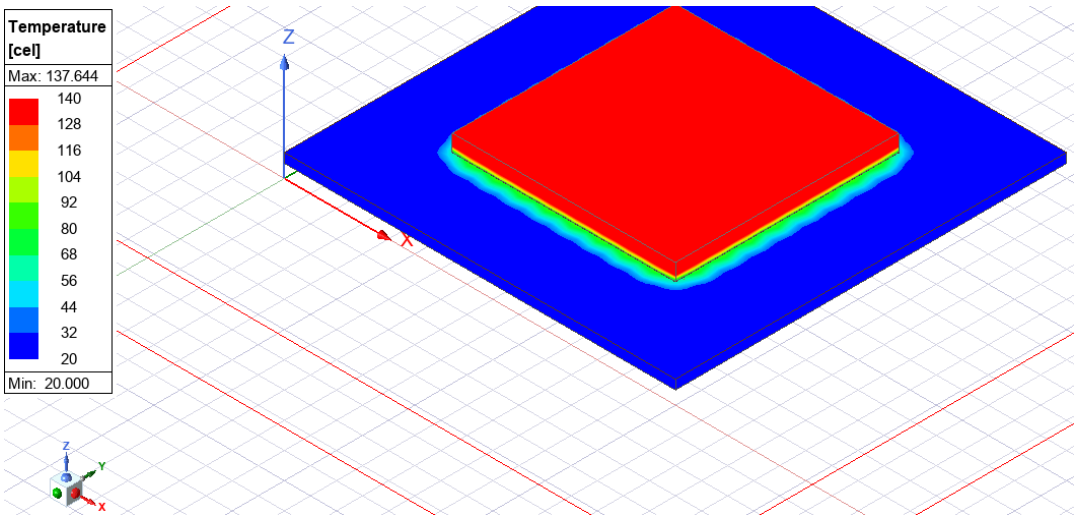

Ambient temperature on substrate, high temperature on die

Field plot-bottom view

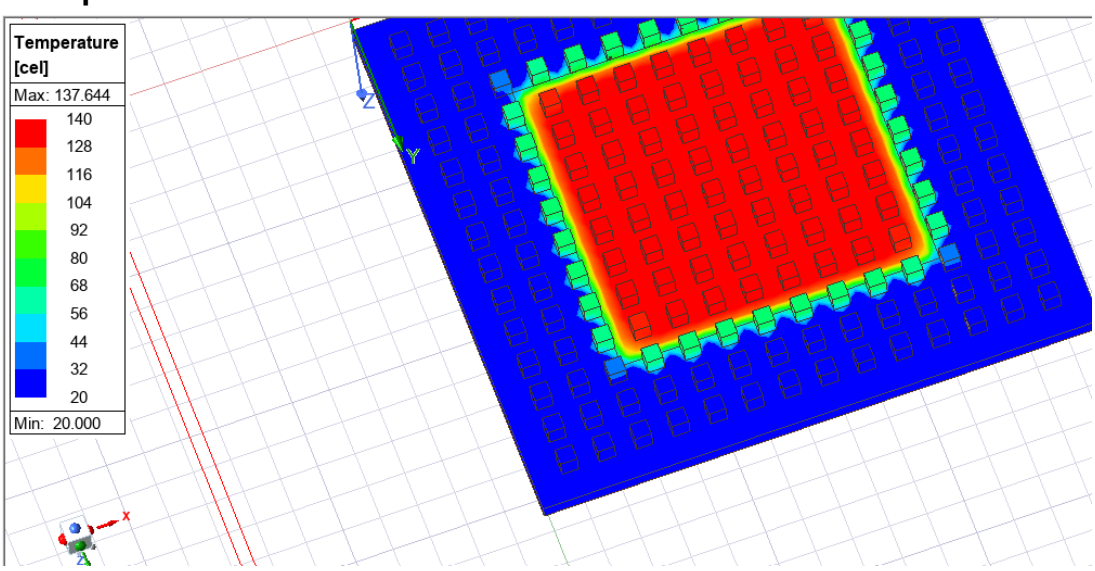

Higher temperature is seen wherever die is, it is very susceptible to thermal stress. If it builds up over time it can lead to problems.