Module 5: Package Design and Modelling: Building a Semiconductor Package from Scratch

L17: Introduction to Package Cross Section Modelling in Ansys Electronic Desktop

In this lecture, we are guided on how to design a semiconductor package from scratch using Ansys Electronic Desktop (AEDT).

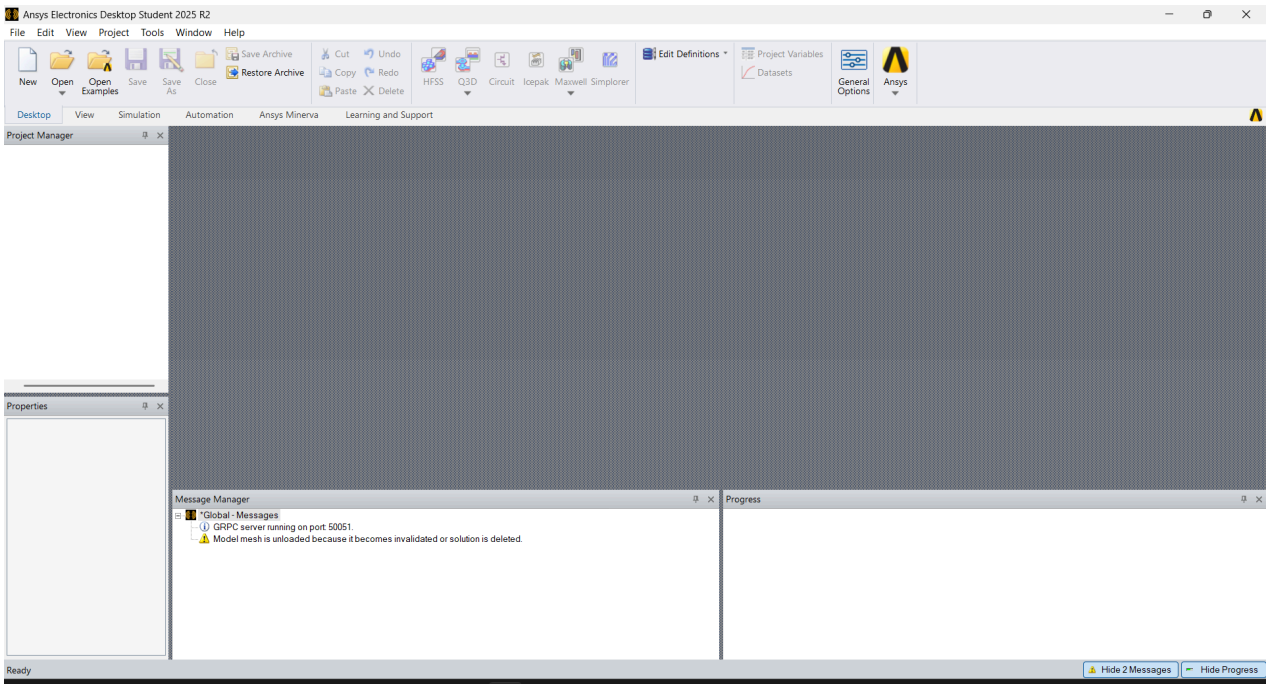

After launching Ansys Electronic desktop, select Q3D.

L18: Creating the Die & Substrate in AEDT

We create a die by selecting the rectangle tool and making a rectangle. We can now select the rectangle properties and resize as per our requirements which are 3mmx3mm and position of (0,0,0).

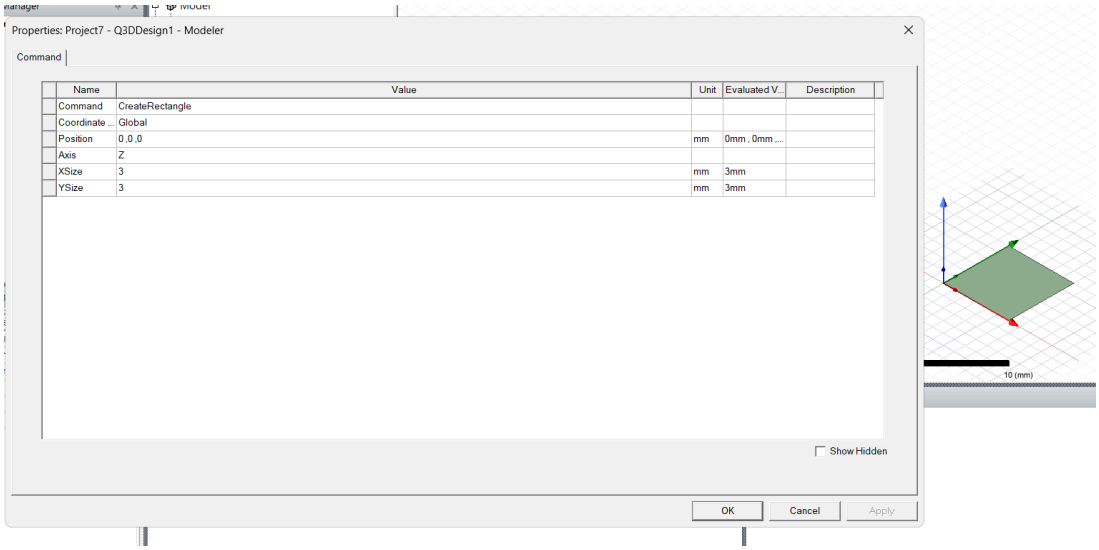

Next, select the rectangle, and choose the thicken sheet option from **Modeler→Surface→Thicken Sheet**. This creates a die of the specified thickness.

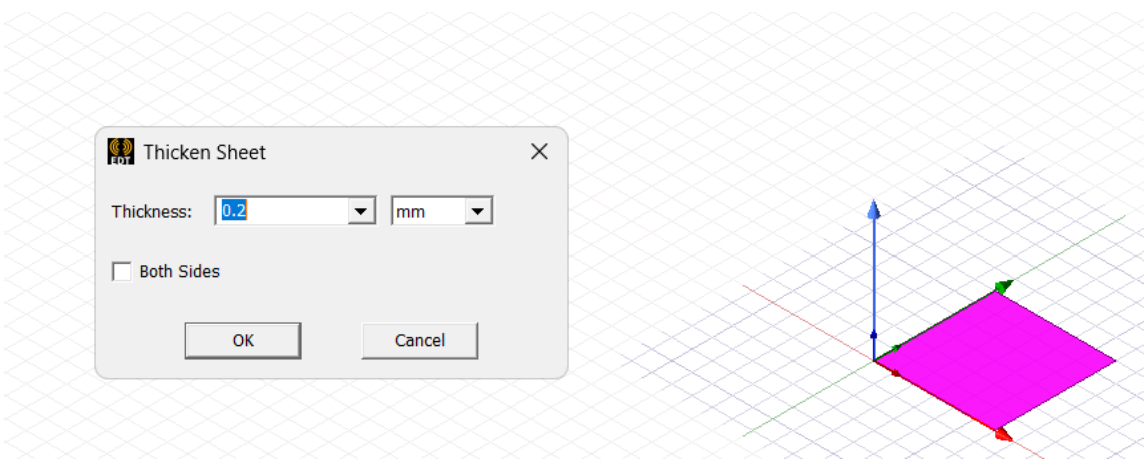

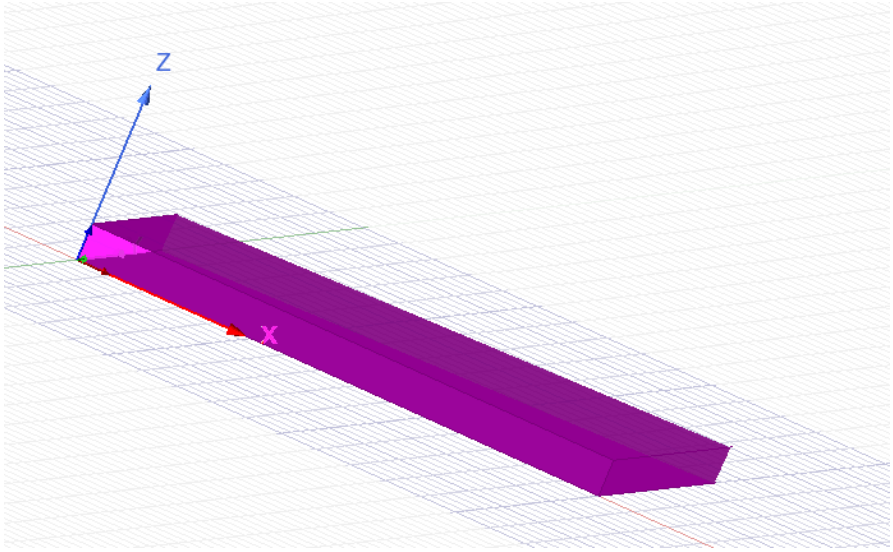

The material of the die is changed to silicon from its properties tab.

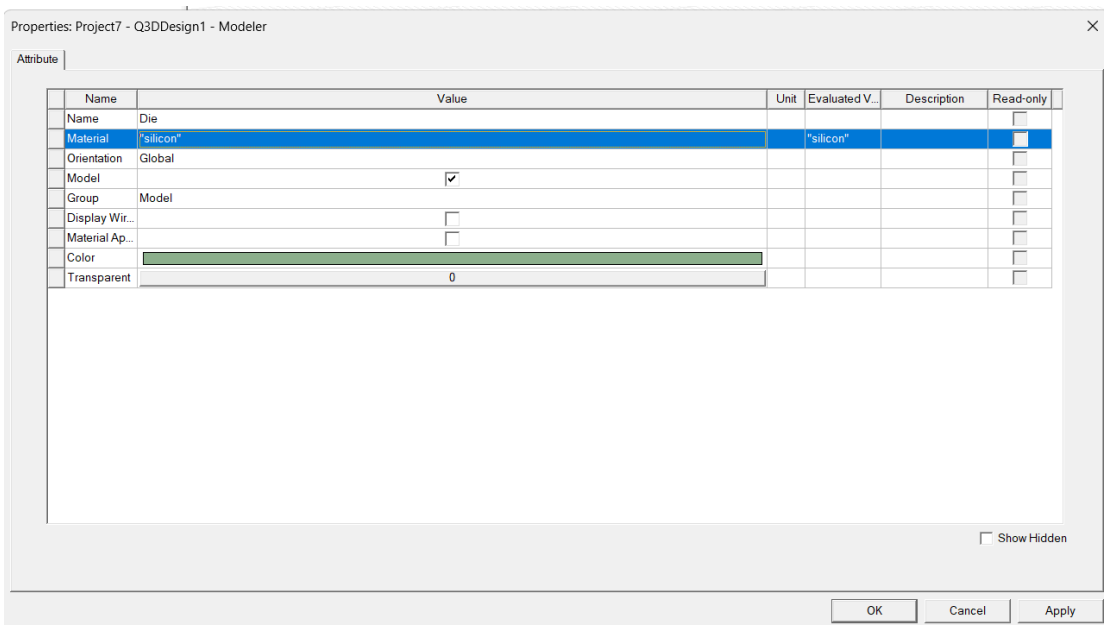

Similarly, the substrate geometry is also created.
A rectangle is drawn with dimensions of 5mmx5mm and positions of (-1,-1,0).

Properties: Project7 - Q3DDesign1 - Modeler

Command

Name	Value	Unit	Evaluated V...	Description
Command	CreateRectangle			
Coordinate ...	Global			
Position	-1 ,-1 ,0	mm	-1mm , -1mm...	
Axis	Z			
XSize	5	mm	5mm	
YSize	5	mm	5mm	

Show Hidden

OK Cancel Apply

Its thickness is set to -0.5mm

Properties: Project7 - Q3DDesign1 - Modeler

Command

Name	Value	Unit	Evaluated V...	Description
Command	ThickenSheet			
Thickness	-0.5	mm	-0.5mm	
Both Sides	☐			
Suppress C...	☐			

Show Hidden

OK Cancel Apply

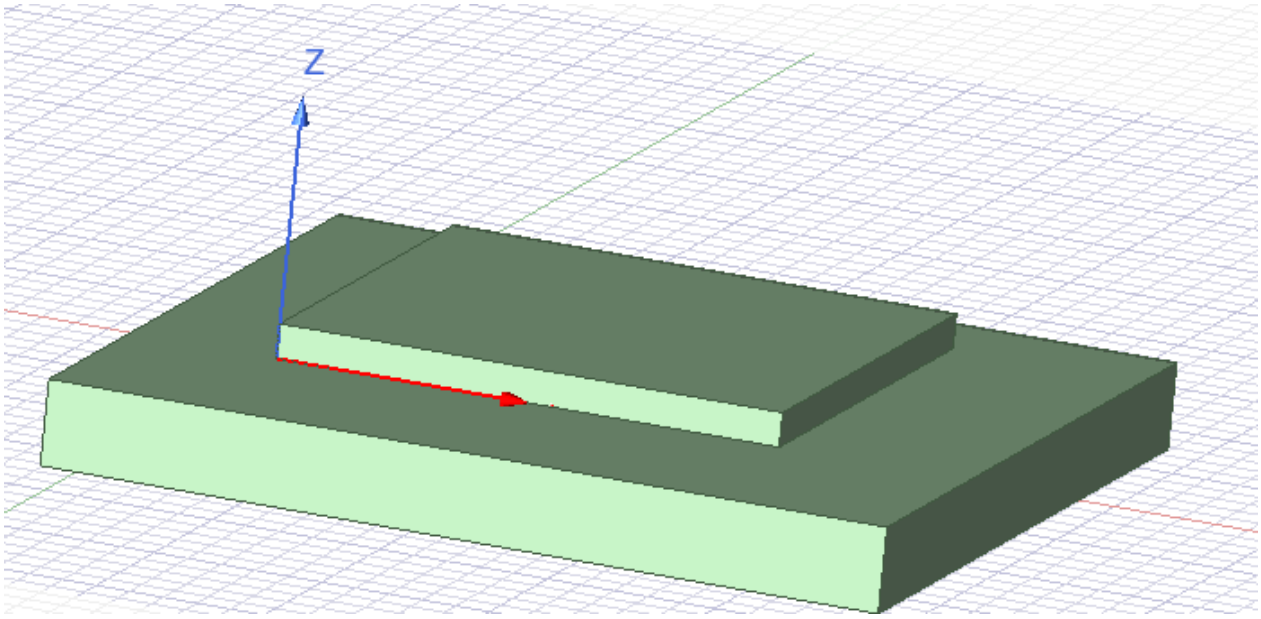

Its positions is now adjusted to (-1,-1,-0.1) to account for die attach thickness.

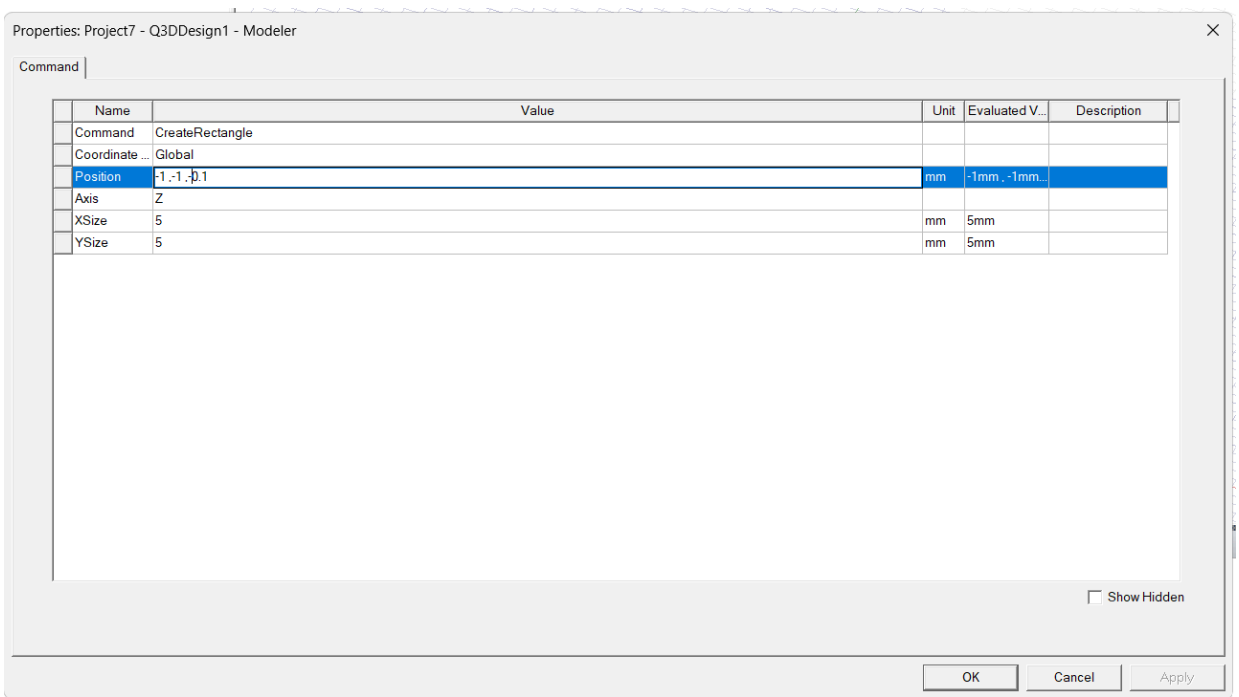

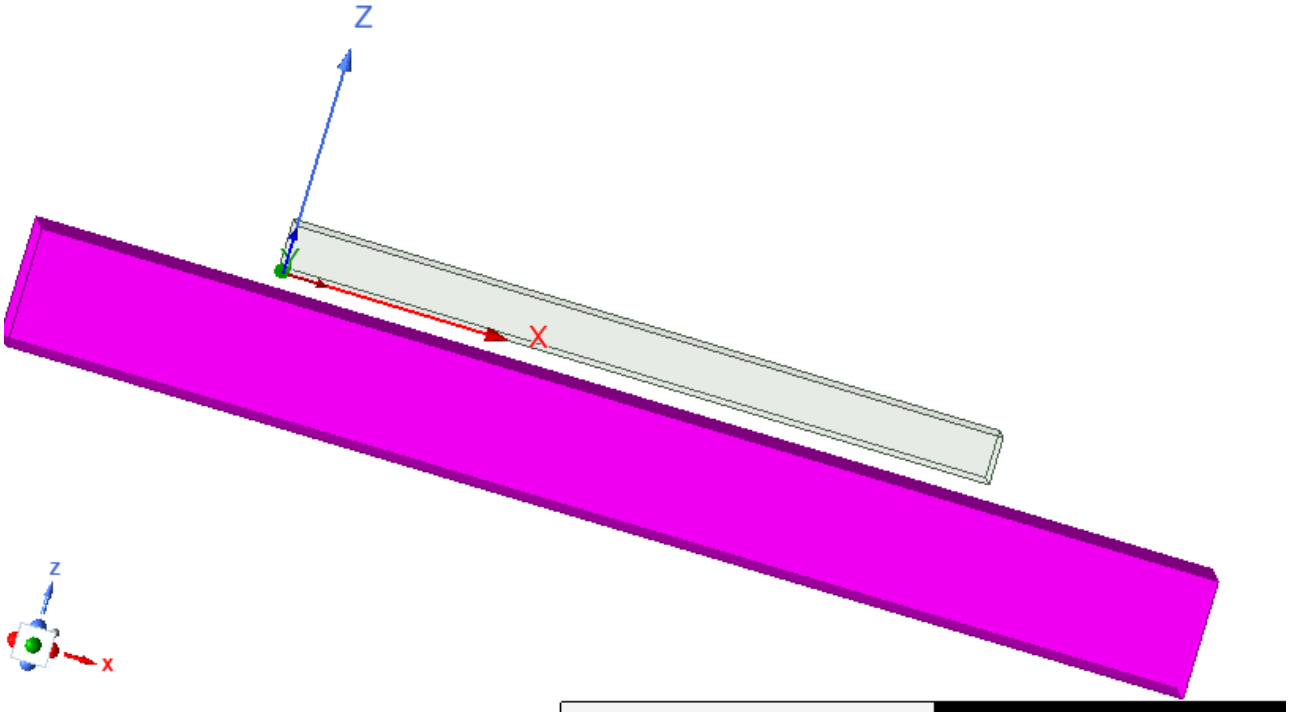

Space between die and substrate for bondpad.

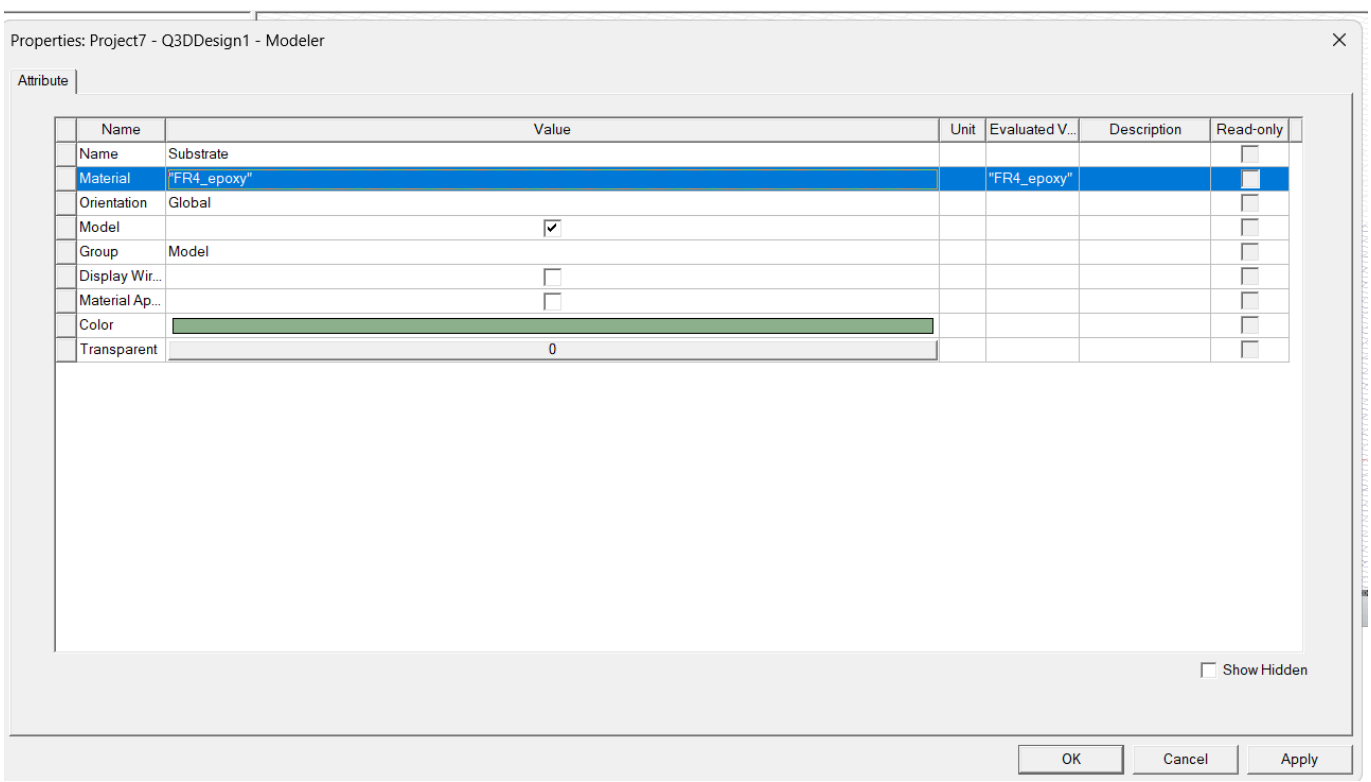

L19: Adding die attach material and bond pads

We draw another rectangle with same size as die, 3mmx3mm at same coordinates(0,0,0)
Thickness is set to -0.1mm as die attach material is between die and substrate. Its material is set to modified epoxy

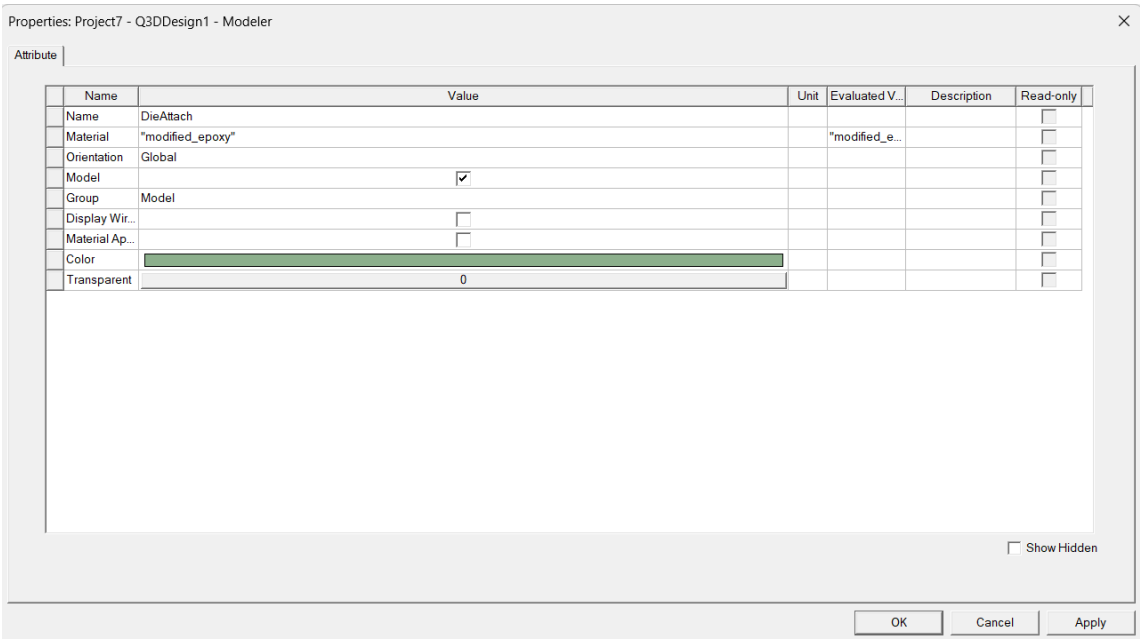

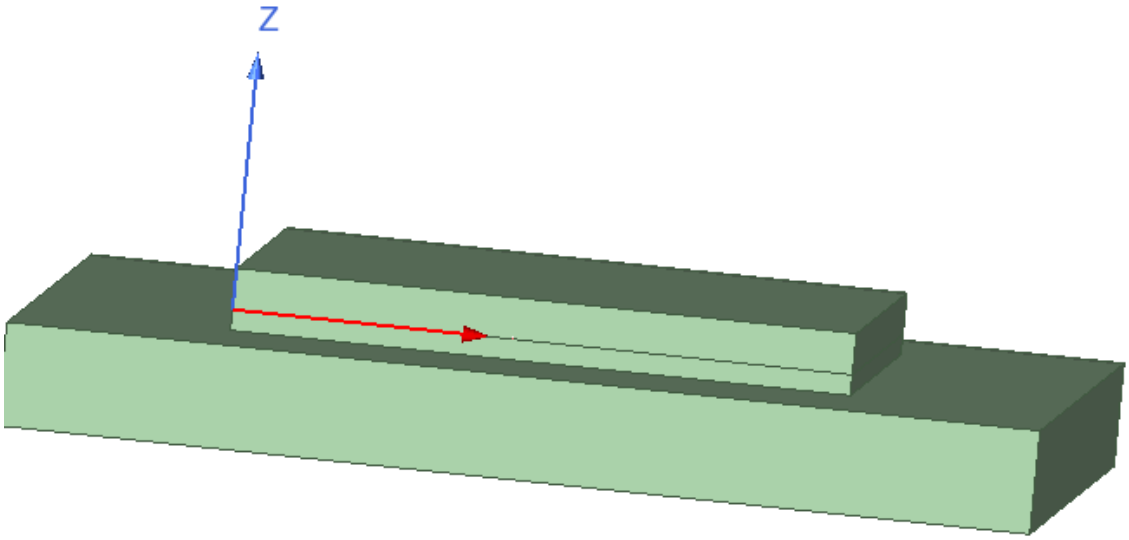

Bond pad creation on die substrate

A rectangle is drawn with dimensions of (0.2mmx0.2mm). This is the die bond pad and it is set to position (0.2,0.2,0.2) so that it sits at top of the die and at one of the edges. Its thickness is set to 0.005mm.

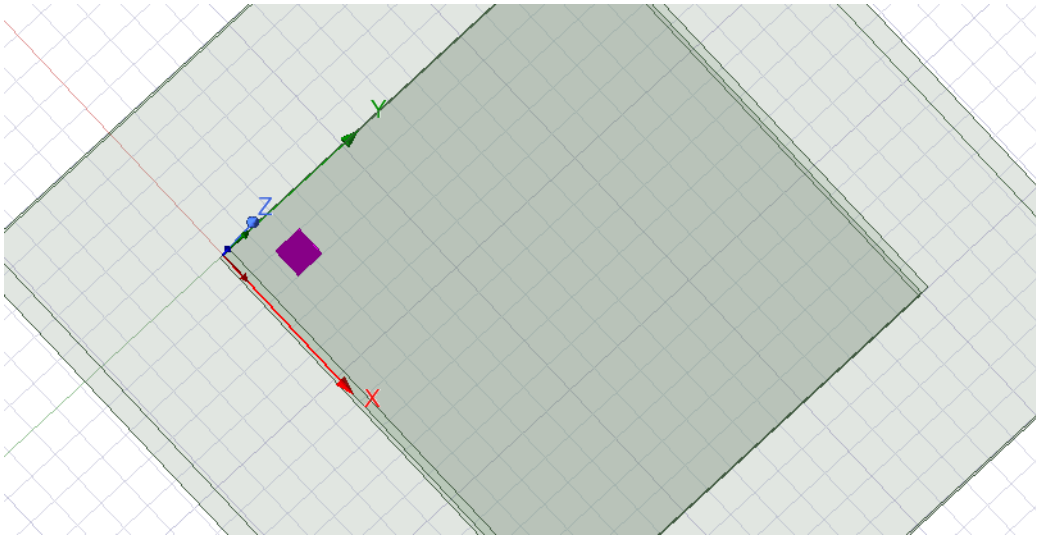

Similarly a substrate bond pad is created with dimensions (0.2mmx0.2mm). Its co-ordinates are set to (0.2,-0.8,-0.1) to align it with die bond pad.

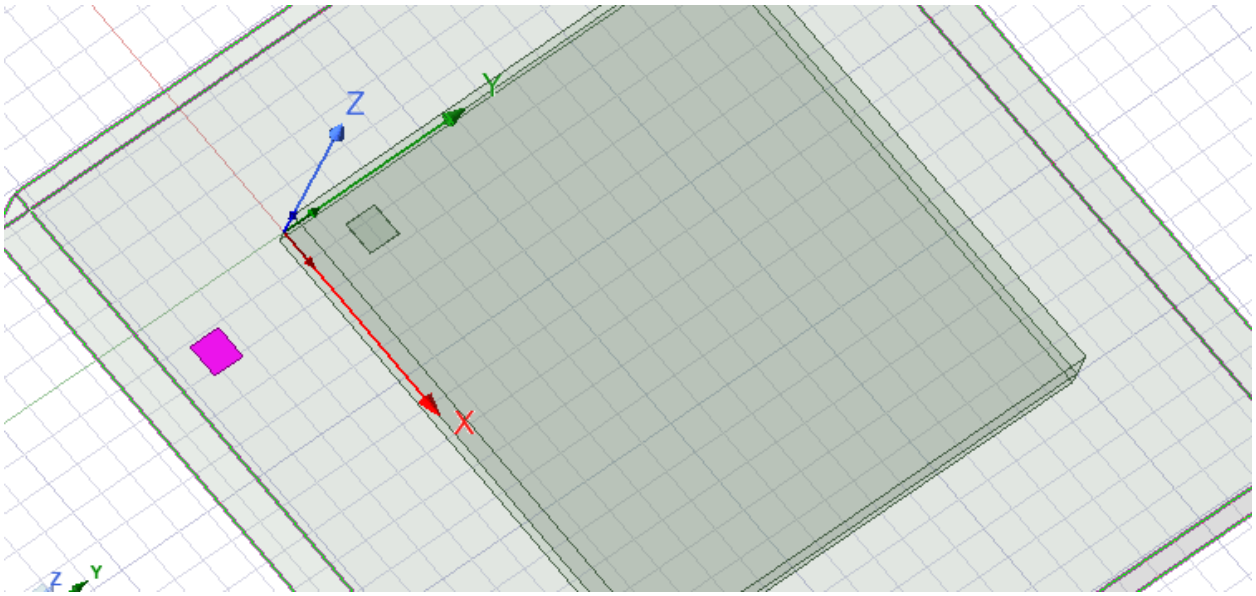

L20: Wire bond creation and material assignment

A bondwire is used to connect both bondpads.

- Select **Draw→Bondwire**.
- We connect the diebond and surfacebond pads centers.
- The bondwire type is set to JEDEC 4-point.
- Material is set as gold.

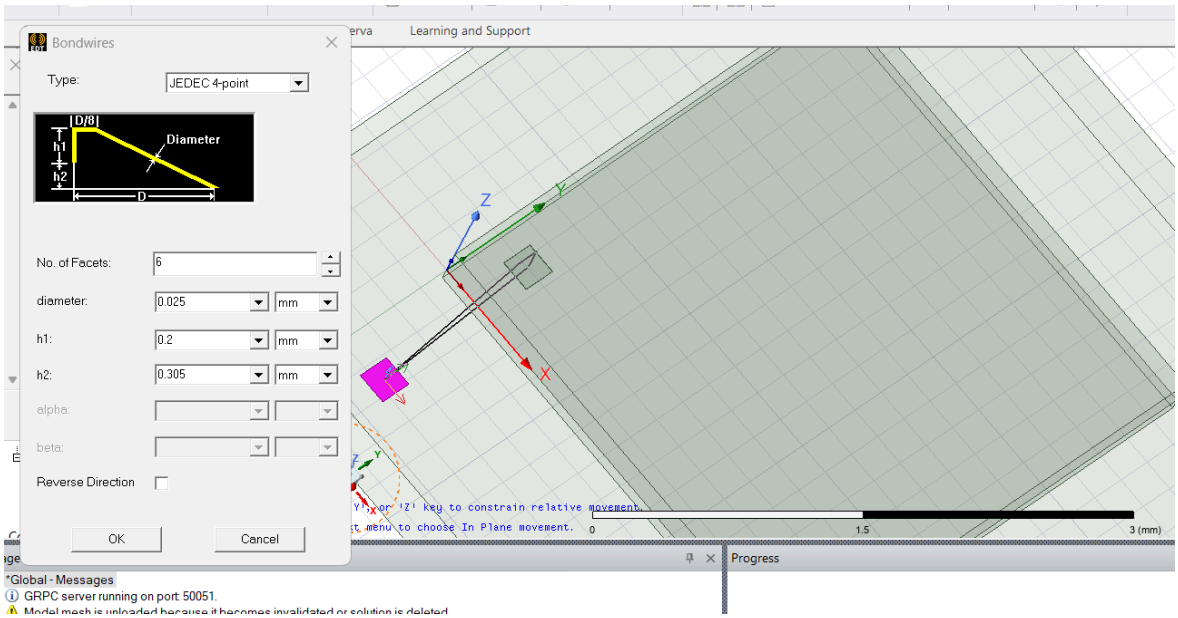

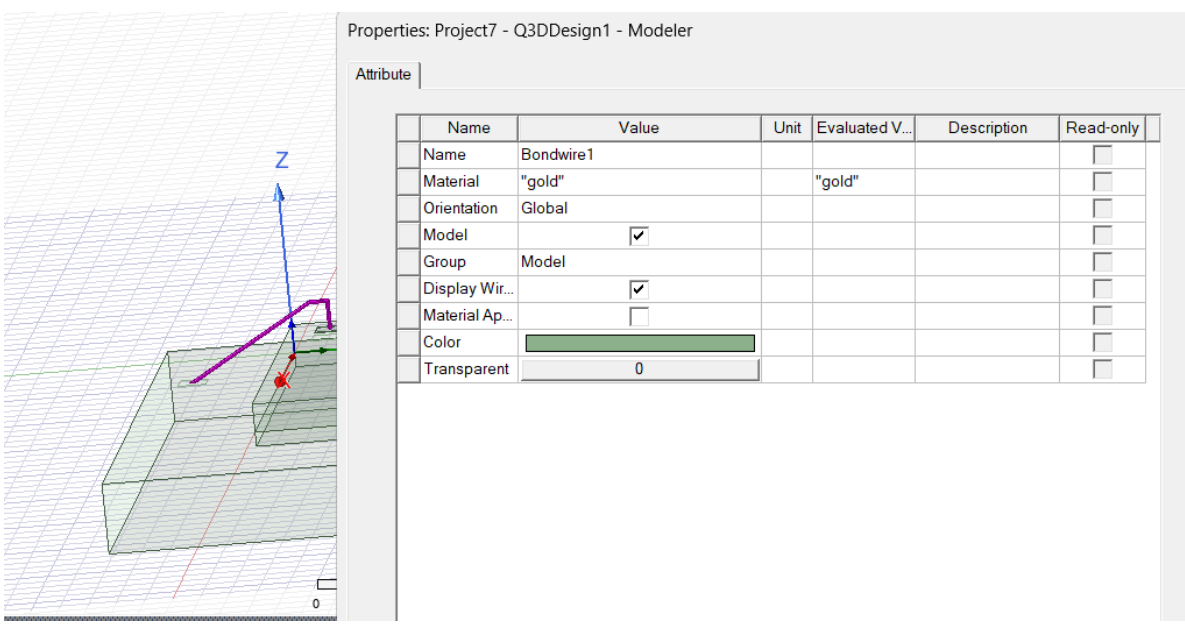

These steps are repeated to create more die bondpads and substrate bondpads and connect them with bondwires.

L21: Applying mold compound and finalizing the package model
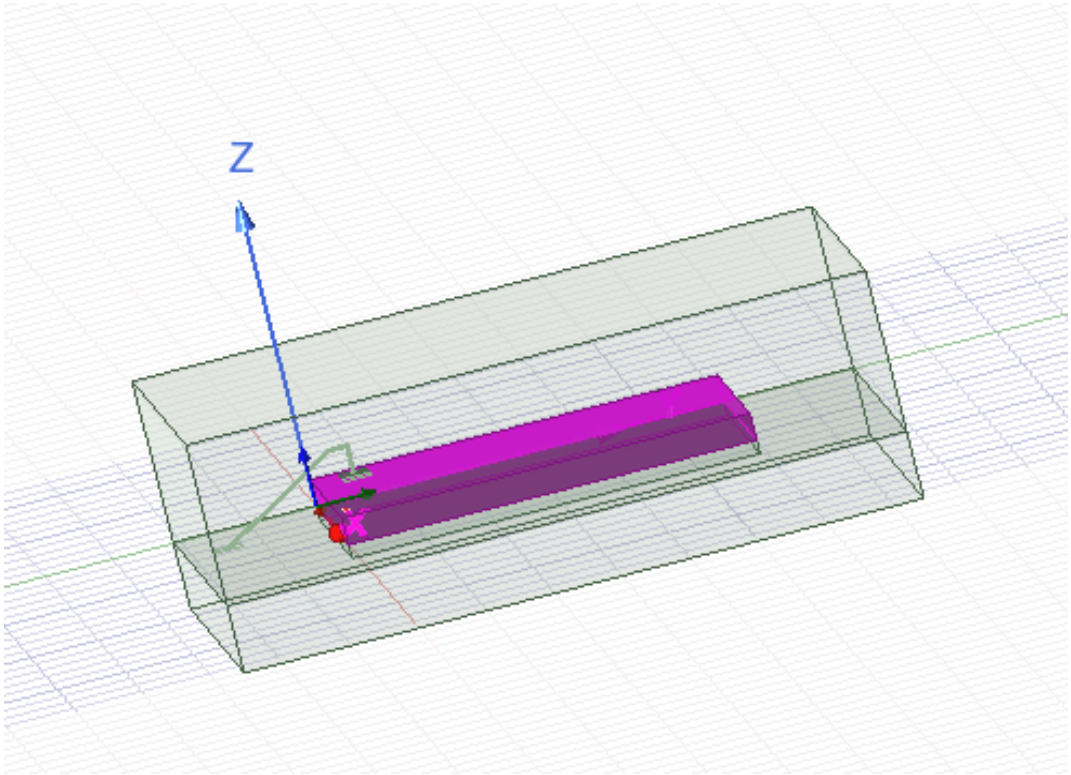
A rectangular enclosure is built around the die with dimensions of (5mmx5mm) with 1.2mm thickness. Its material is set to epoxy_kevlar.
It is positioned at (-1,-1,-0.1) so that it can cover the top side of the substrate.