AC CIRCUITS

INTRODUCTION

- A DC quantity is one which has a constant magnitude irrespective of time, but an alternating quantity is one which has a varying magnitude and angle with respect to time.
- Since AC quantity is time varying in nature, at any time it can be represented in three ways

1)By its effective value

2) By its average value and

3) By its peak value.

Sinusoidal voltage

- Commercial alternators produce sinusoidal Voltage (ie) Alternating voltage is a sinewave. Sinusoidal voltage can be produced by rotating coil in a uniform magnetic field.
-
- The sinusoidal voltage can be expressed by the equation.
- $v=V_m \sin\omega t$ (or) $v=V_m \sin\boldsymbol{\theta}$ **($\omega t=\boldsymbol{\theta}$)**

where,

- v=Instantaneous values of alternating voltage
- V_m=Maximum Value of alternating voltage
- ω=Angular velocity of the coil
- Sinusoidal voltage always produces sinusoidal currents.

Sinusoidal current

- The sinusoidal current can be expressed by the equation.
- $i=I_m \sin\omega t$ (or) $i=I_m \sin\boldsymbol{\theta}$ **($\omega t=\boldsymbol{\theta}$)**

Where,

- i=Instantaneous values of alternating current
- I_m=Maximum Value of alternating current
- ω=Angular velocity of the coil

Some important terms

1. Wave form

- A wave form is the graph in which the instantaneous value of any quantity is plotted against time.

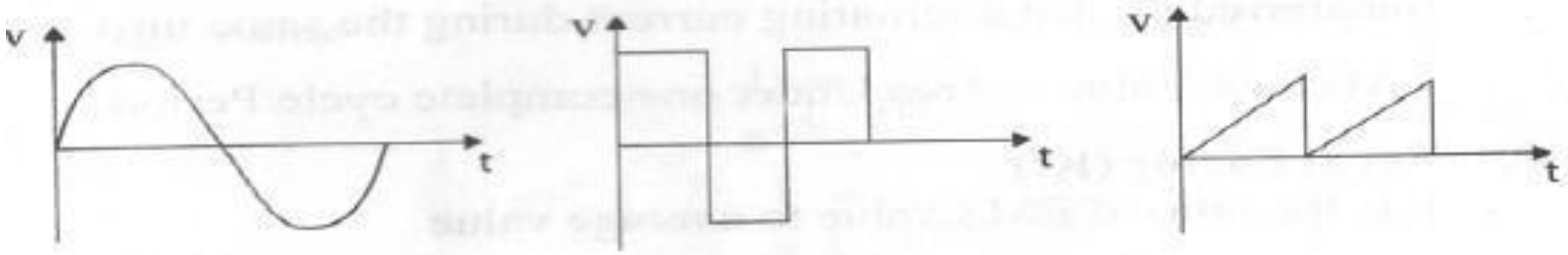

In Figure (a) Sinusoidal waveform (b) Rectangular waveform (c) saw tooth waveform

2. Alternating Waveform

- This is wave which reverses its direction at regularly recurring interval.

Some important terms

3. Cycle

It is a set of positive and negative portion of waveforms.

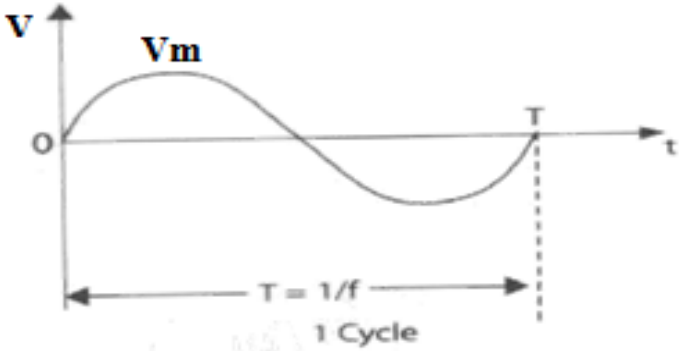

4. Time Period

The time required for an alternating quantity to complete one cycle is called the time period and it denoted by T.

5. Frequency

The number of cycles per second is called frequency and is denoted by f.It is measured in cycles/second (cps) (or) Hertz

$$F = 1/T$$

Some important terms

6. **Amplitude**

The maximum value of an alternating quantity in a cycle is called amplitude. It is also known as peak value.

7. **R.M.S value [Root Mean Square]**

The steady current when flowing through a given resistor for a given time produces the same amount of heat as produced by an alternating current when flowing through the same resistor for the same time is called R.M.S value of the alternating current.

$$RMS = \sqrt{\frac{\text{Area under squared curve}}{base}}$$

Some important terms

8. Average Value

The average value of an alternating current is defined as the DC current which transfers across any circuit the same change as is transferred by that alternating current during the same time.

Average Value = Area Under one complete cycle/Period.

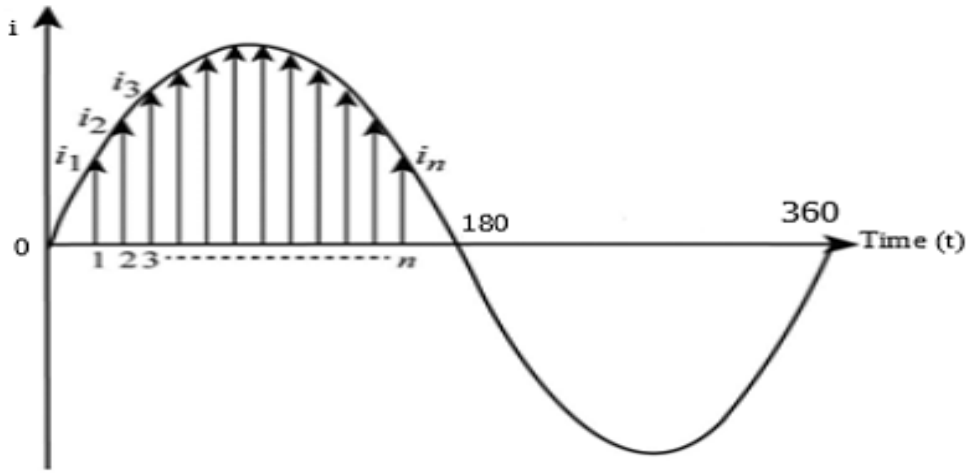

Some important terms

9. Form Factor

The ratio of RMS value to the Average value of alternating Quantity is called Form factor

Form Factor = RMS value/Average Value

10. Peak Factor (Crest Factor)

It is the ratio of Peak (or) maximum value to RMS value.

Peak Factor = Peak Value/RMS value

NETWORK THEOREMS

- Electric circuit theorems are always beneficial to help find voltage and currents in multi-loop circuits. These theorems use fundamental rules or formulas and basic equations of mathematics to analyse basic components of electrical or electronics parameters such as voltages, currents, resistance, and so on.

These fundamental theorems are

- Thevenin’s theorem
- Norton’s theorem
- Maximum power transfer theorem
- Superposition theorem.

Thevenin’s Theorem

Statement: A linear network consisting of a number of voltage sources and resistances can be replaced by an equivalent network having a single voltage source called Thevenin’s voltage (V_{th}) and a single resistance (R_{th}).

Thevenin's equivalent circuit

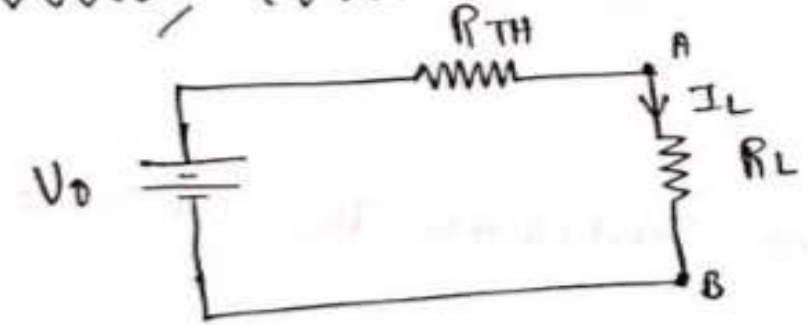

Where

V_0 – Open circuit voltage at terminals A B

R_{TH} – Thevenin's looking back resistances between terminals A and B

I_L – Load current through resistor R_L

$$I_L = \frac{V_0}{R_{TH} + R_L}$$

Step by step Procedure for Thevenin's equivalent circuit.

① Remove the load resistor whose current is required.

② Find the open circuit Voltage V_o, which across the two terminals where the load is removed.

③ All the Voltage sources are replaced by their internal resistances.

④ Calculate the Thevenin's looking back resistance R_{TH} from the two terminals.

⑤ Replace the entire network by the open circuit Voltage V_o in series with the equivalent Resistance R_{TH}.

(6) Connect the load resistance R_L where it was already remove.

(7) Then find the current flowing through R_L

$$\boxed{I_L = \frac{V_0}{R_{TH} + R_L}}$$

Problem

Find the current through the 0.1 Ω resistor in the fig using Thevenin's method.

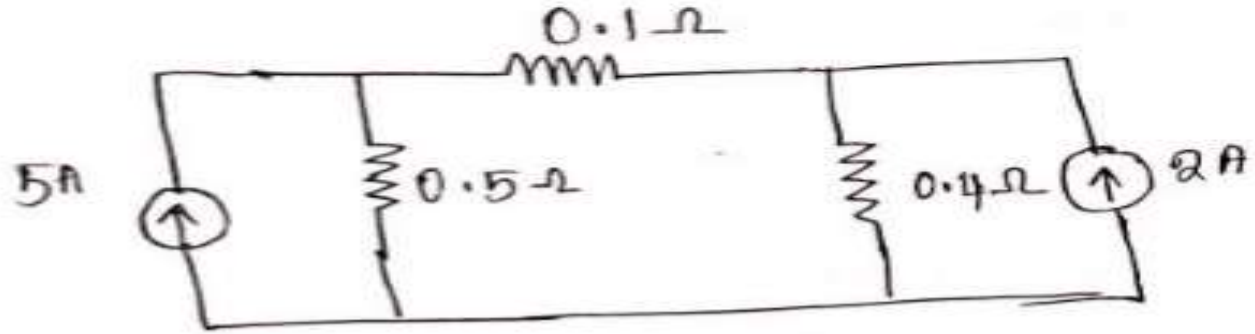

Solution

Step 1 : To find V_0 = ?

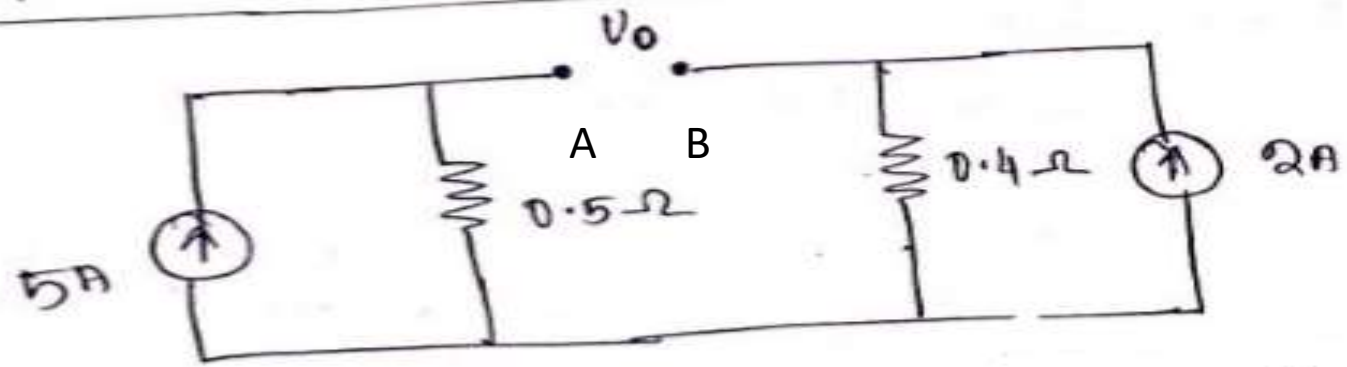

$V_1 = 5 \times 0.5 = 2.5V$

$V_2 = 2 \times 0.4 = 0.8V$

[This circuit is reduced by using Source Transformation].

[If we need we Transformation Voltage Source to current Source (or) current Source to Voltage Source)

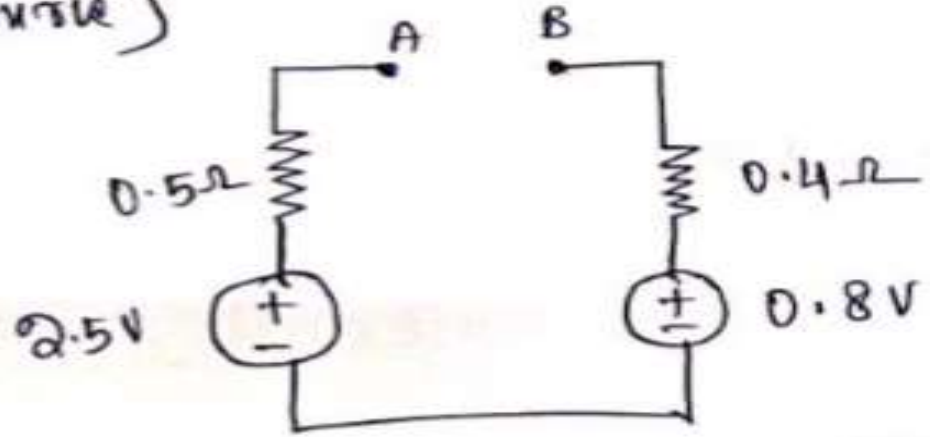

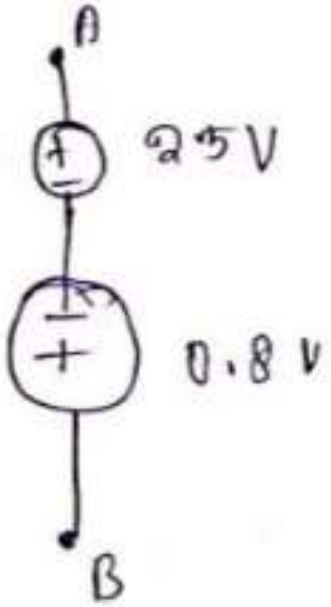

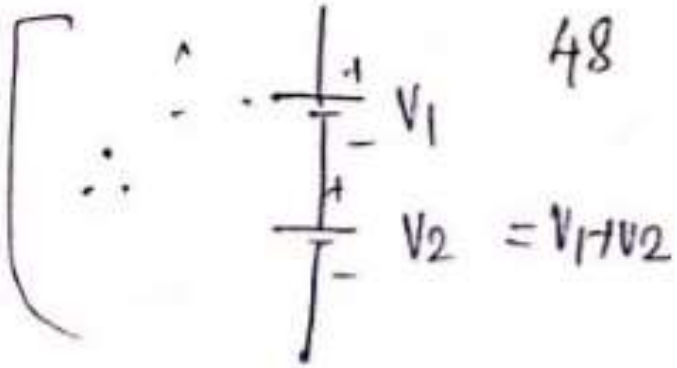

$$V_0 = 2.5V - 0.8V$$

$$\boxed{V_0 = 1.7V}$$

Step 2 : To Find $R_{TH} = ?$

Consider only Resistance Values.

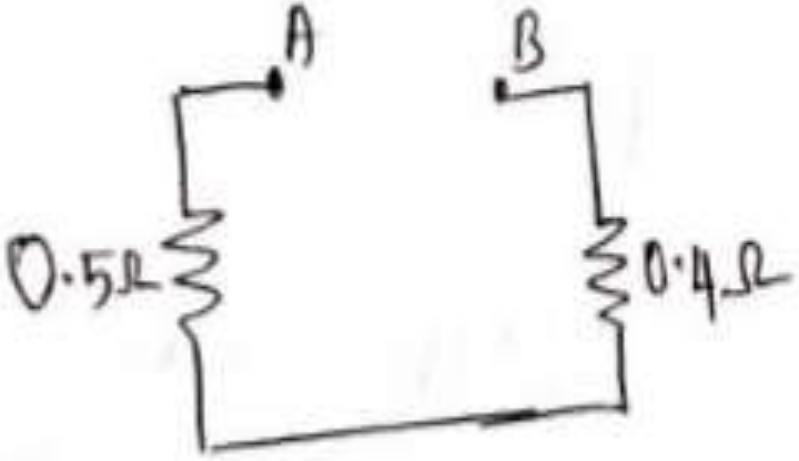

$\Rightarrow$

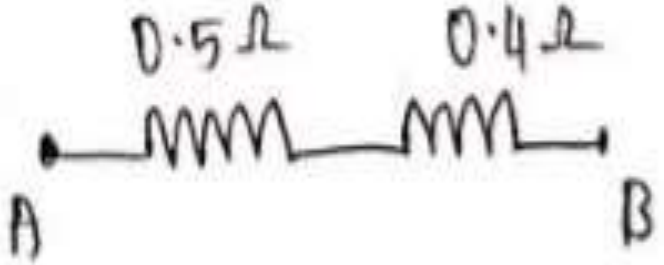

$$\boxed{R_{TH} = 0.9\,\Omega}$$

Step 3 : To find $I_L = ?$

Thevenin's equivalent circuit -

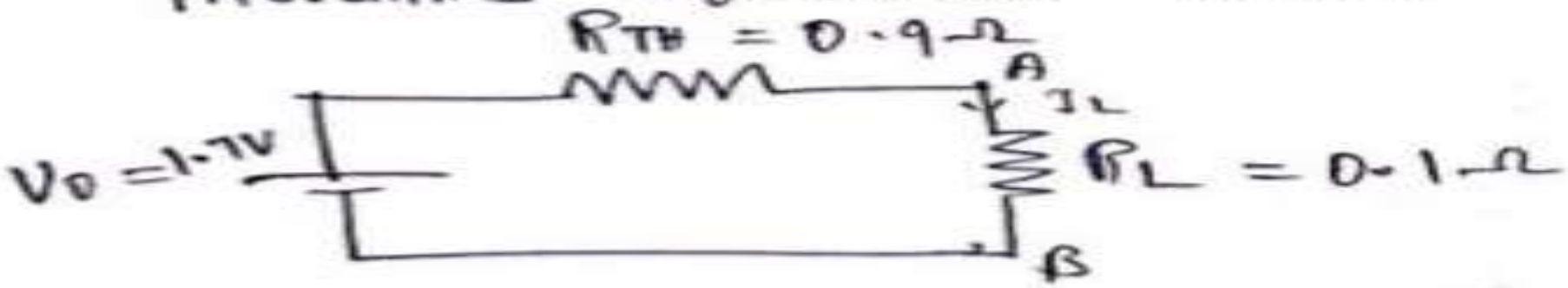

$$I_L = \frac{V_0}{R_{TH} + R_L}$$

$$I_L = \frac{1.7}{0.9 + 0.1}$$

$$\boxed{I_L = 1.7 \text{ Amps}}$$

Norton's Theorem.

Statement :- Any two terminals network can be reduced to a current source in parallel with a resistor -

Equivalent circuit

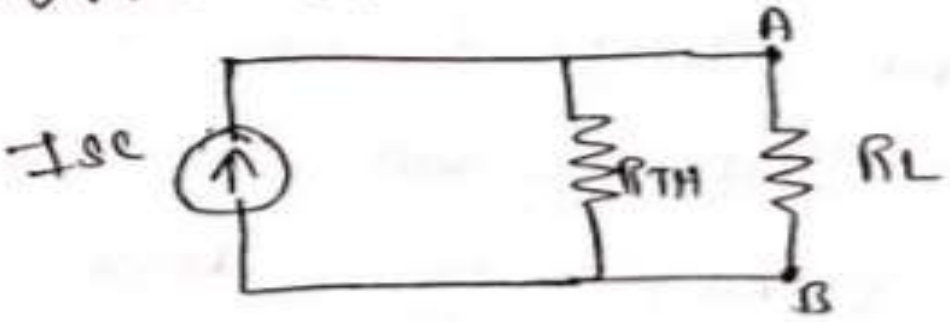

$$I_L = I_{sc} \times \frac{R_{TH}}{R_{TH} + R_L}$$

Where I_{sc} = Short circuit current at AB

R_{TH} = Thevenin's looking back resistance.

Steps to Solve Norton's Theorem :-

Norton's theorem can be solved in the same way as Thevenin's theorem. After obtaining equivalent circuit V_0 & R_{TH}. the Norton's equivalent circuit can be obtained by simple source transformation

$$I_L = I_{sc} \times \frac{R_{TH}}{R_{TH} + R_L}$$

Problems:

① In the circuit shown in fig. determine the power delivered to 15Ω resistance using Norton's theorem.

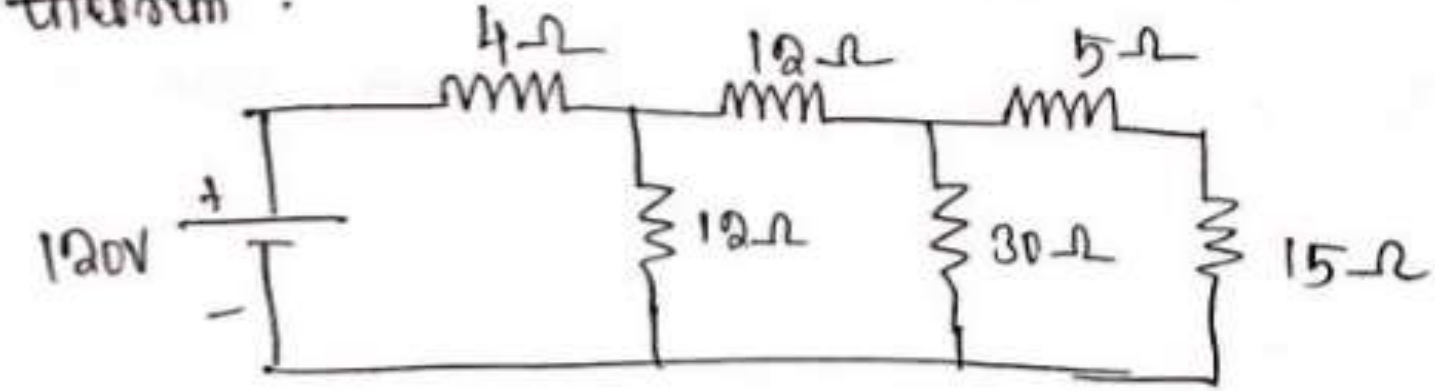

Solution: The power delivered to 15Ω resistance is to be determined, open circuit the particular branch. Reduce the circuit by source transformation and resistance reduction.

$$I = \frac{V}{R} = \frac{120}{4} = 30\ A$$

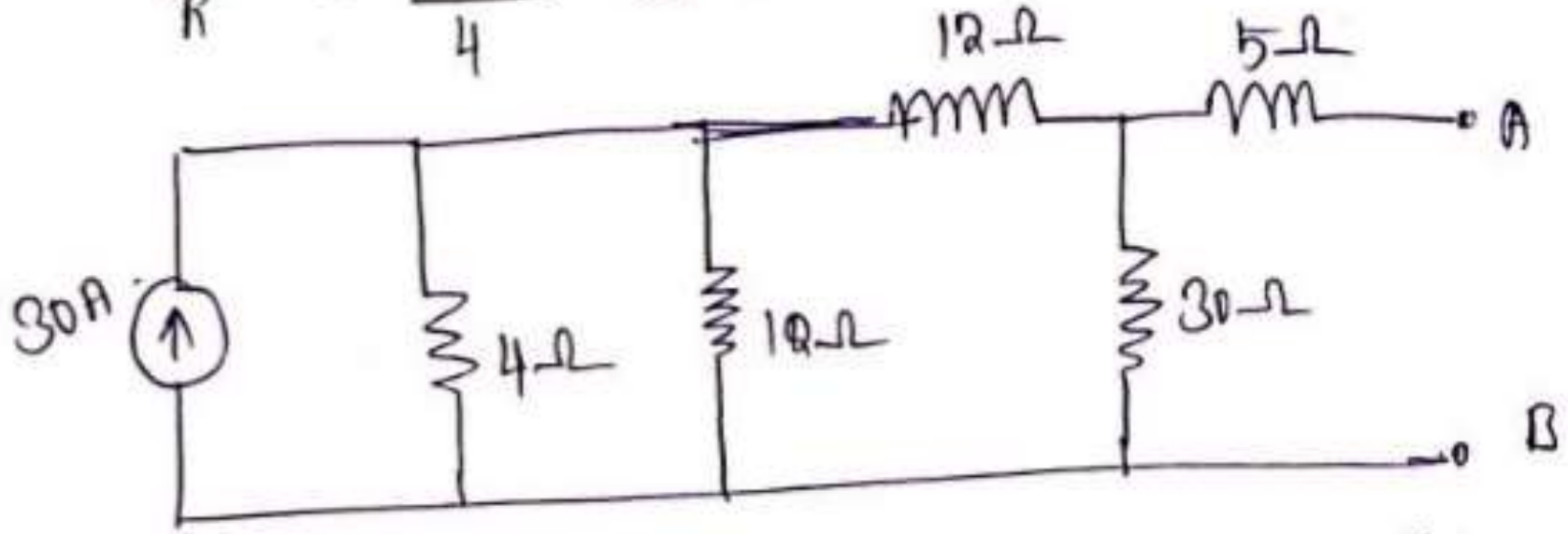

The resistors 4Ω & 12Ω are in Parallel

$$R = \frac{4 \times 12}{4+12} = 3\Omega$$

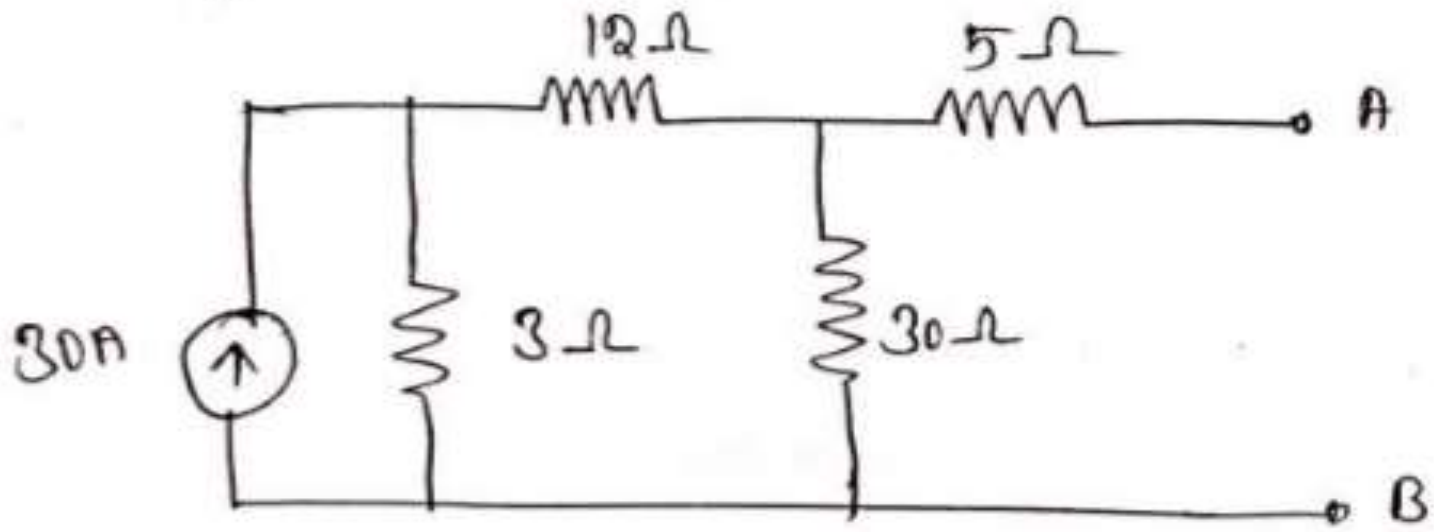

$V = IR = 30 \times 3 = 90V$

$\Downarrow$

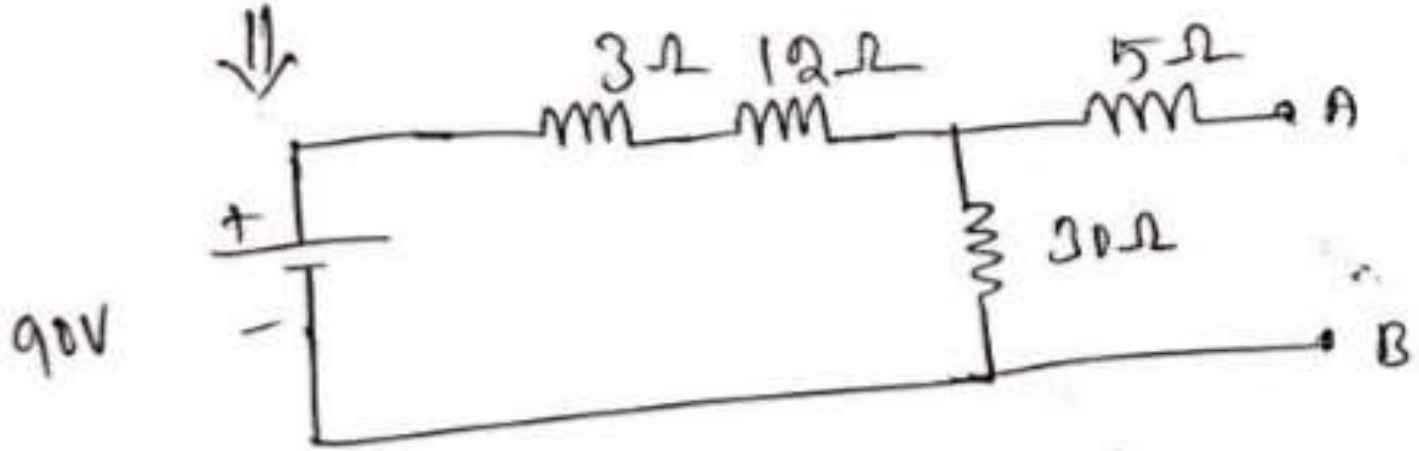

3Ω & 12Ω are in series.

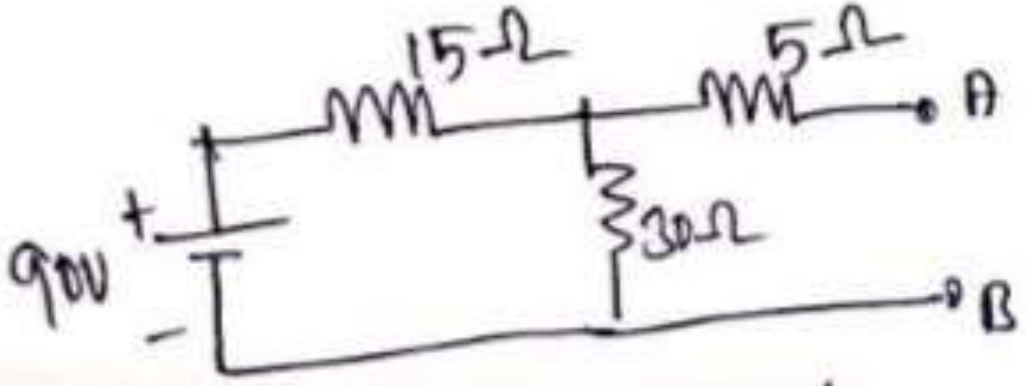

$I = 90/15 = 6A$

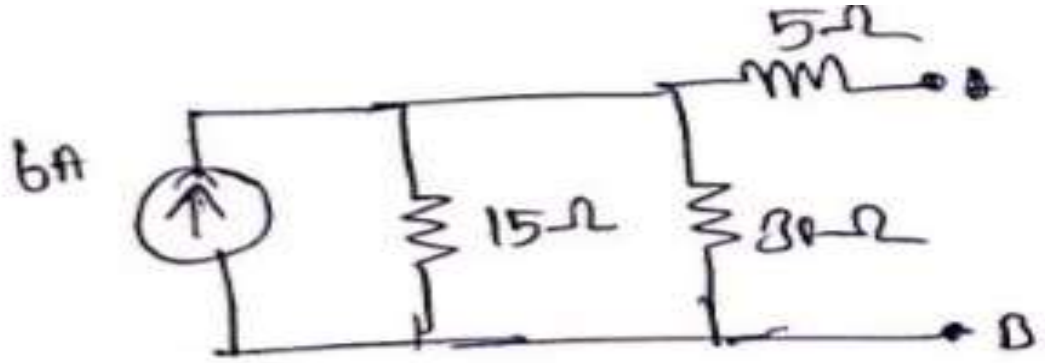

15Ω and 30Ω are in Parallel.

$$= \frac{15 \times 30}{15+30} = \frac{450}{45} = 10\,\Omega$$

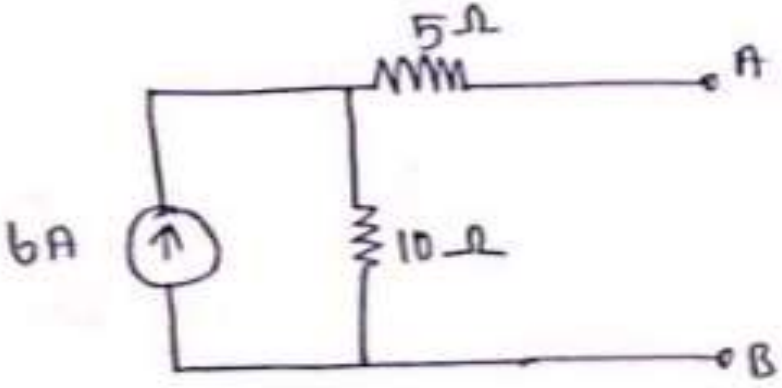

V = 6 * 10 = 60 V

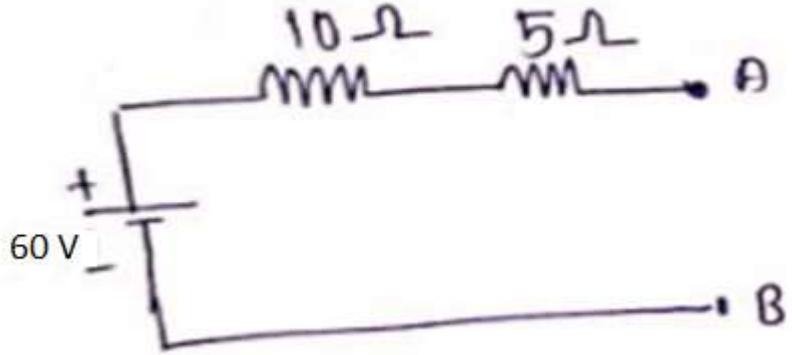

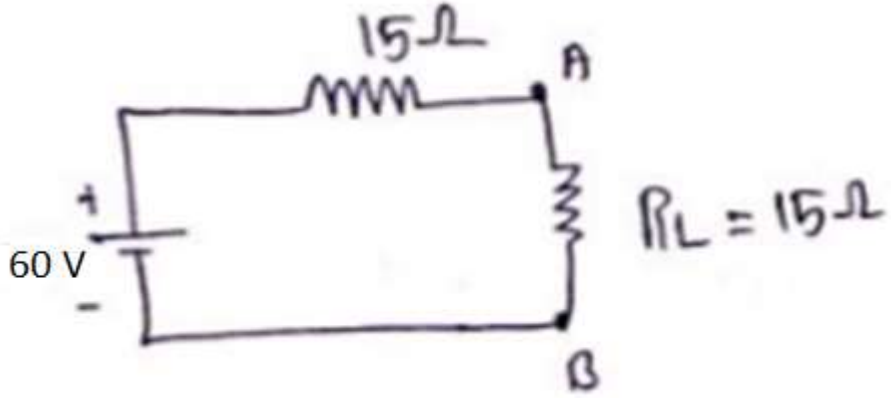

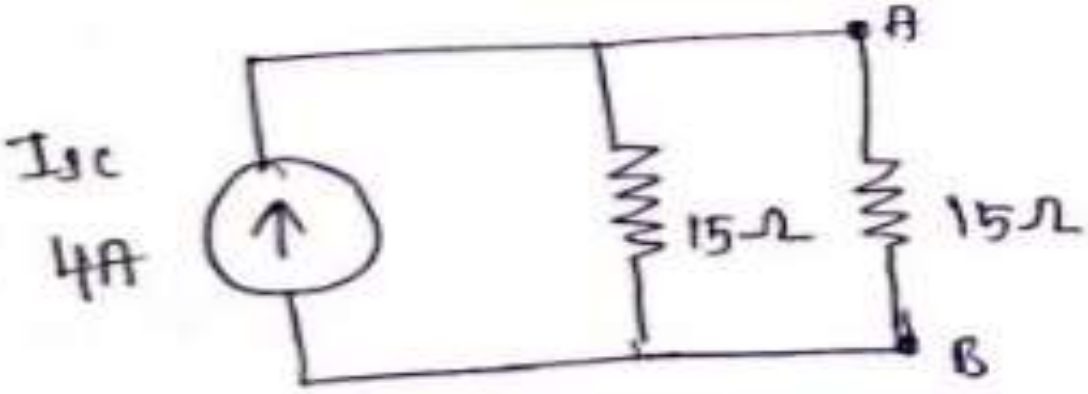

$$I_L = I_{sc} \times \frac{R_{TH}}{R_{TH}+R_L}$$

$$= 4 \times \frac{15}{15+15}$$

$$\boxed{I_L = 2 \text{ Amps}}$$

Power delivered by load $= I_L^2 R_L$

$= (2)^2 \times 15$

$= 60$ watts.

STEPS FOR THEOEMS IN SHORT

- Source Transformation and Series parallel reduction of circuits should be repeated again and again in sequence to attain an equivalent voltage or current source from source transformation and also equivalent resistance from series and parallel reduction.
- These steps are common for both Thevenin’s and Norton’s theorem to attain their respective equivalent circuits

Maximum Power Transfer Theorem

In dc circuit maximum power is transferred from a source to load when the load resistance is made equal to the internal resistance or looking back resistance of the network from the load terminals.

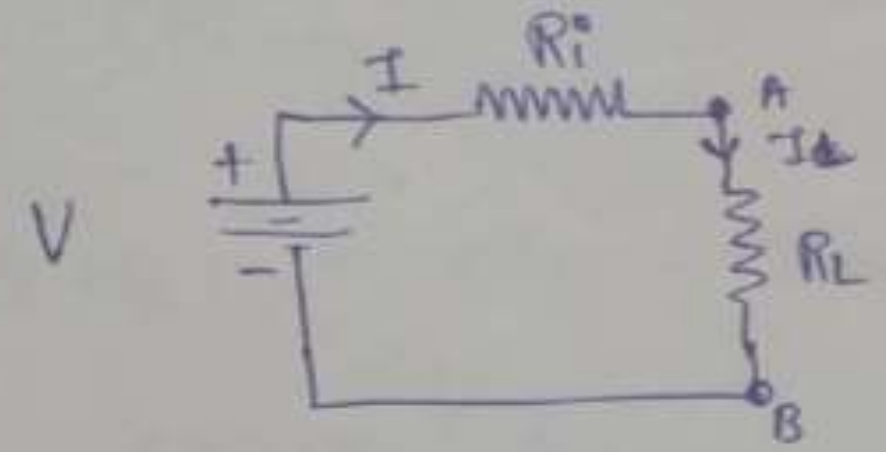

$V = V_0$ - Thevenin's open circuit voltage

$R_i = R_{th}$ ↳ Thevenin's resistance

$I = I_L$

Thevenin's equivalent circuit consisting of Thevenin's Voltage series with Thevenin's looking back resistance $R_{TH} = R_i$ as shown in fig.

Circuit current $I_L = \dfrac{V}{R_i + R_L}$

Power consumed by the load $P_L = I_L^2 R_L$

$$P_L = \left(\frac{V}{R_i + R_L}\right)^2 \times R_L = \frac{V^2 R_L}{(R_i + R_L)^2}$$

$$\boxed{P_L = \frac{V^2 R_L}{(R_i + R_L)^2}}$$

For maximum Power $\frac{dP_L}{dR_L} = 0$

$$\frac{d}{dR_L}\left(\frac{V^2 R_L}{(R_i+R_L)^2}\right) = 0$$

$$\frac{(R_i+R_L)^2 V^2 - V^2 R_L \; 2(R_i+R_L)}{(R_i+R_L)^4} = 0$$

$u = V^2 R_L$

$du = V^2$

$v = (R_i+R_L)^2$

$dv = 2(R_i+R_L)$

$d\left(\frac{u}{v}\right) = \frac{v\,du - u\,dv}{v^2}$

$$(R_i+R_L)^2 V^2 - V^2 R_L \; 2(R_i+R_L) = 0$$

$$(R_i+R_L)^{\cancel{2}} \cancel{V^2} = \cancel{V^2} R_L \; 2\cancel{(R_i+R_L)}$$

$$(R_i+R_L) = 2R_L$$

$$R_i = 2R_L - R_L$$

$$\boxed{R_i = R_L}$$

For maximum power condition

$$\boxed{R_i = R_L}$$

Maximum Power $P_{max} = I_L^2 R_L$

$$= \left(\frac{V}{(R_i + R_L)}\right)^2 R_L$$

$$= \left(\frac{V^2}{(R_L + R_L)^2}\right) R_L = \frac{V^2}{(2R_L)^2} \cdot R_L$$

$$= \frac{V^2 R_L}{4R_L^2} = \frac{V^2}{4R_L}$$

$$\boxed{P_{max} = \frac{V^2}{4R_L} \text{ watts}}$$

Problem (1)

Calculate the value of the load resistance for maximum power transferred from the circuit shown in fig. Also find the maximum power = ?

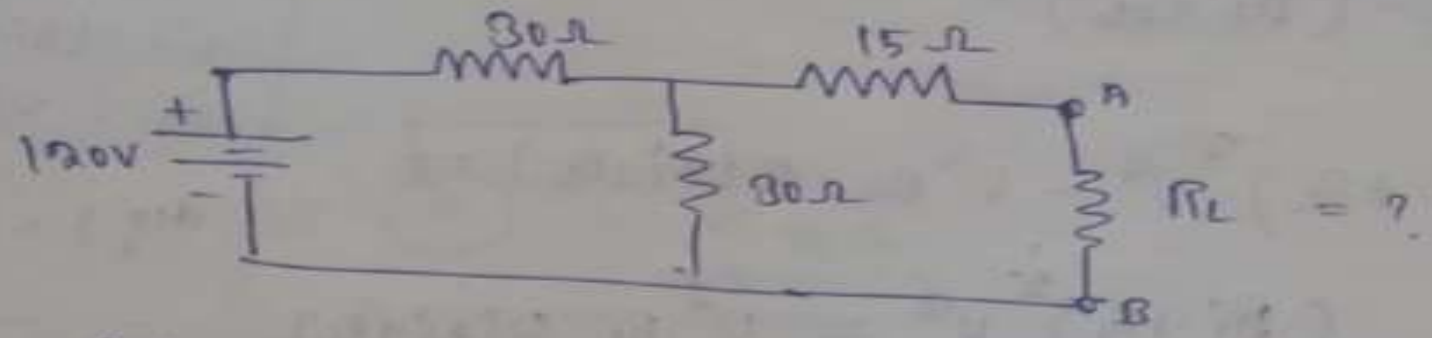

Solution:

Thevenin's equivalent circuit

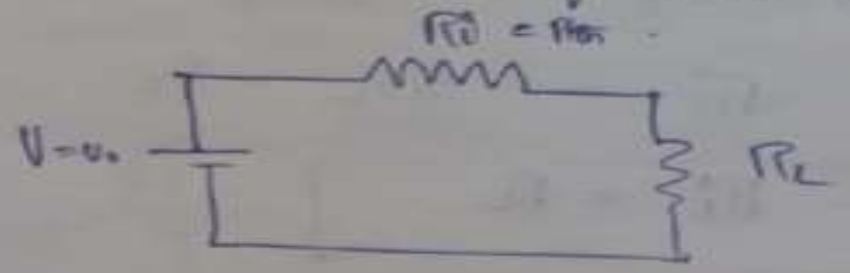

$V = V_0$ = Open circuit voltage at AB

$V = V_0$ = Open circuit Voltage at AB

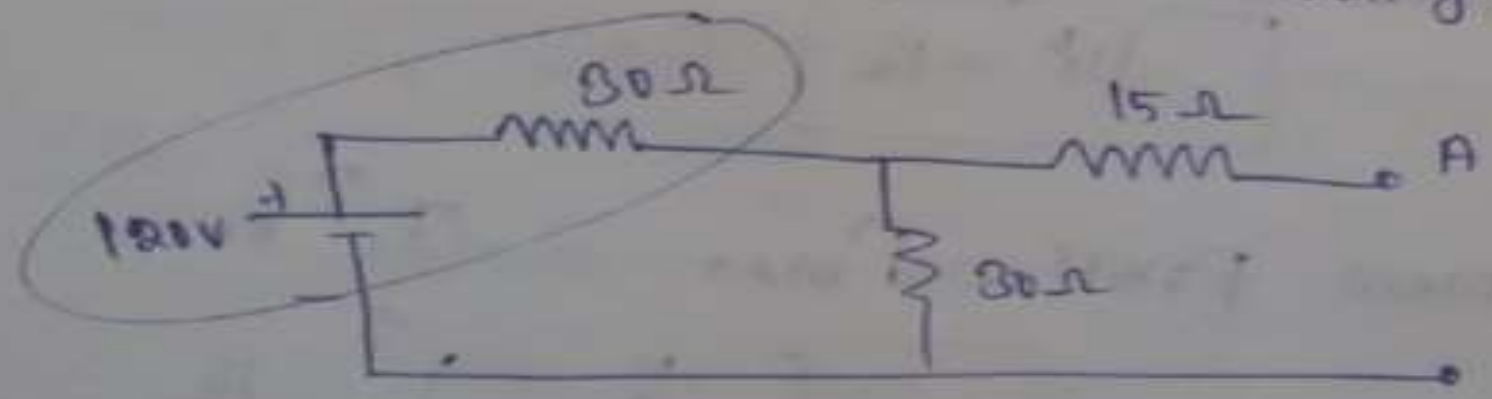

$$I = \frac{V}{R} = \frac{120}{30} = 4A$$

Find $V_0 = ?$ $R_{th} = ?$

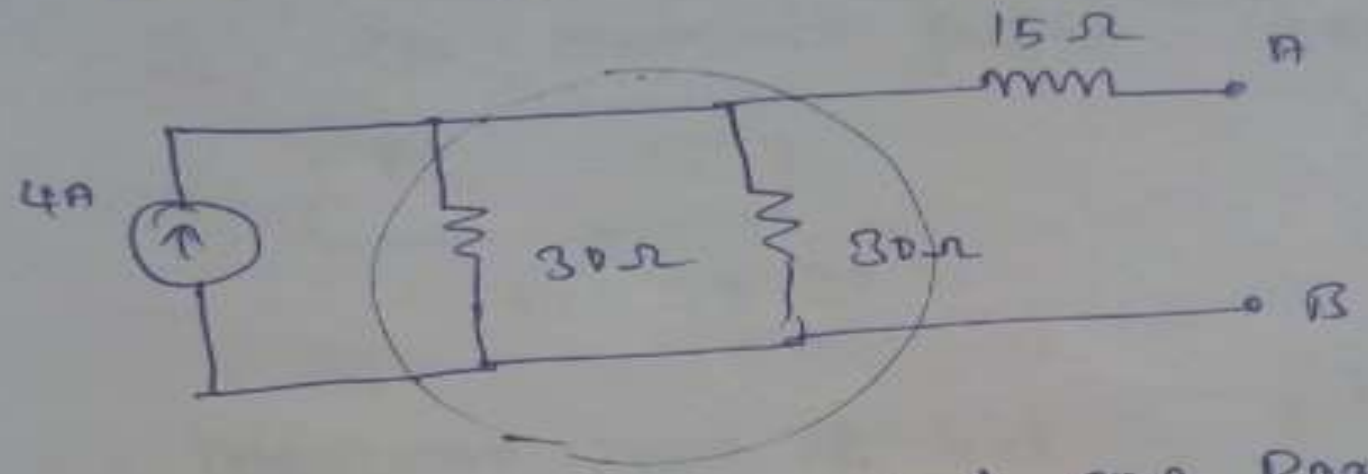

30Ω and 30Ω Parallel

$$= \frac{30 \times 30}{30+30} = \frac{900}{60} = 15\Omega$$

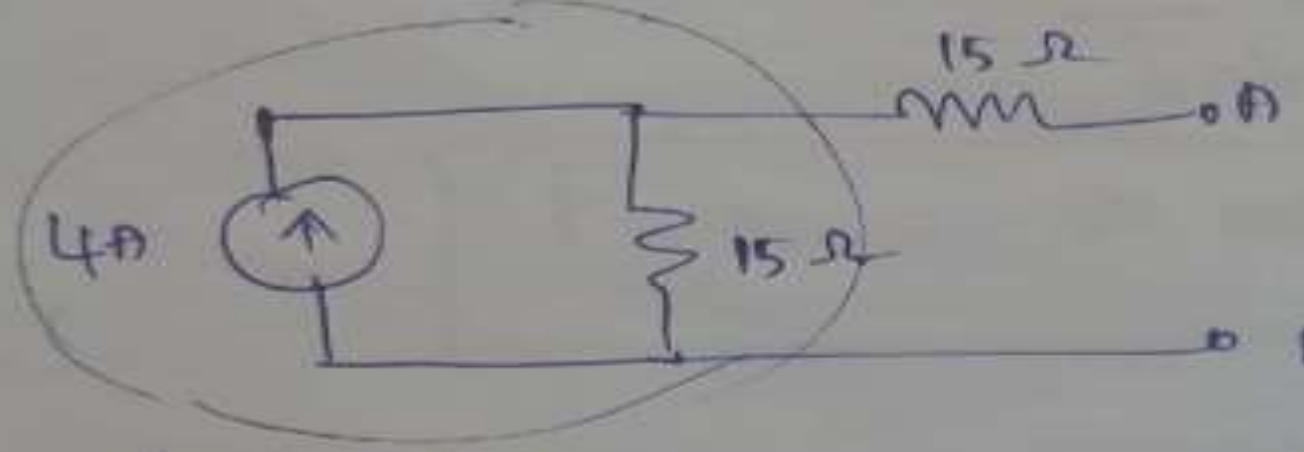

$V = IR$

$V = 4 \times 15 = 60V$

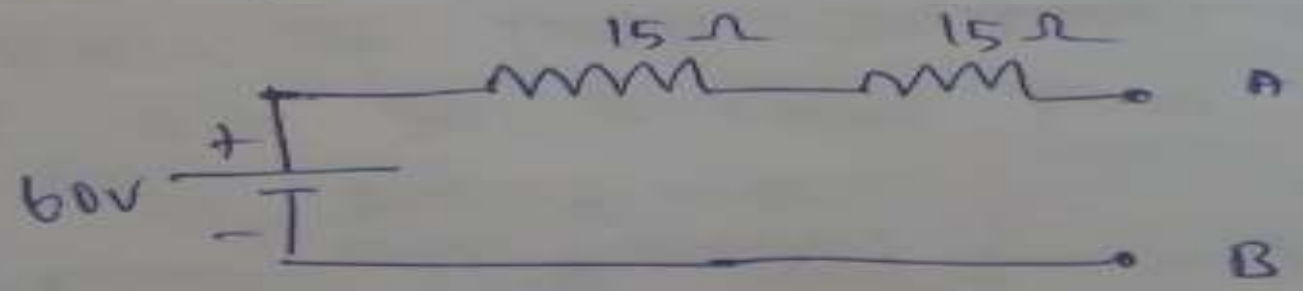

$V_0 = 60V$

$R_{TH} = 15 + 15$

$R_{TH} = 30\,\Omega$

$R_i = R_{th}$

R_L for maximum power Transfer $= R_i$

$$\boxed{R_L = R_i}$$

$$R_L = 30\,\Omega$$

Maximum power at load $= \dfrac{V^2}{4R_L}$

$$= \frac{60^2}{4 \times 30} = \frac{3600}{120}$$

$$\boxed{P_{max} = 30 \text{ watts}}$$

Superposition Theorem

Statement : Any electric circuit energised by two (or) more sources, the response in any element in the network is equal to the algebraic sum of the responses caused by individual sources acting separately

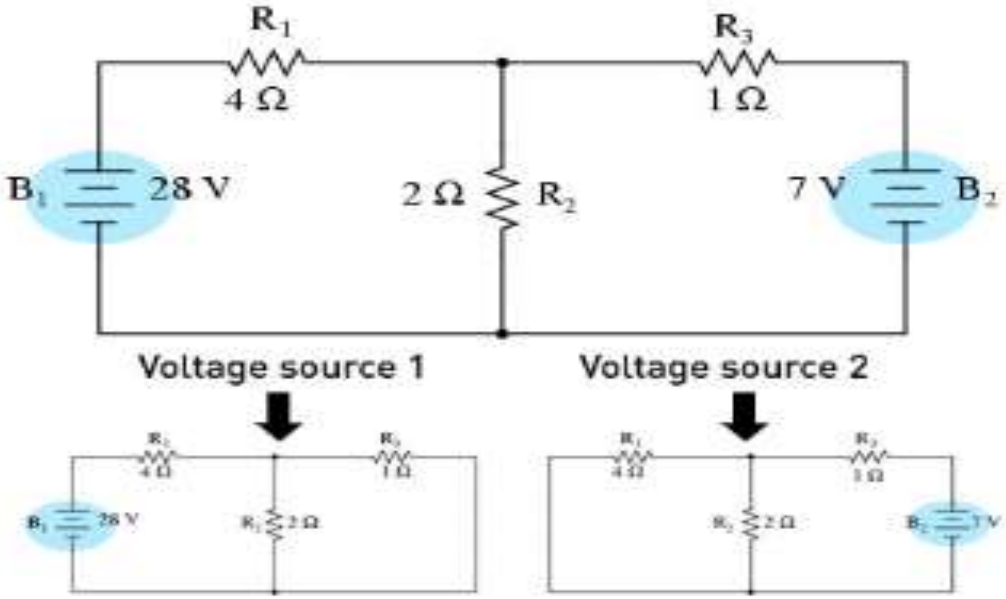

Super Position Theorem

Steps to apply Superposition principle:

1. Turn off all independent sources except one source, Find the output [Voltage (or) current] due to that active source using Nodal (or) Mesh analysis.
2. Repeat step 1 for each of the other independent sources.
3. Find the total current (or) Voltage by adding all the contributions due to the independent sources.

STEPS FOR SUPERPOSITION THEOREM

- Consider only one source to be active at a time.
- Remove all other **IDEAL VOLTAGE SOURCES** by **SHORT CIRCUIT** & all other **IDEAL CURRENT SOURCES** by **OPEN CIRCUIT.**

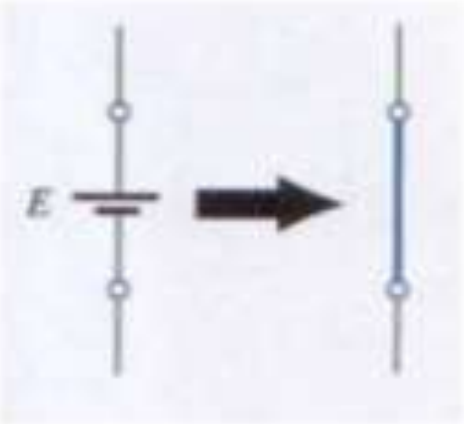

Voltage source is replaced by a Short Circuit

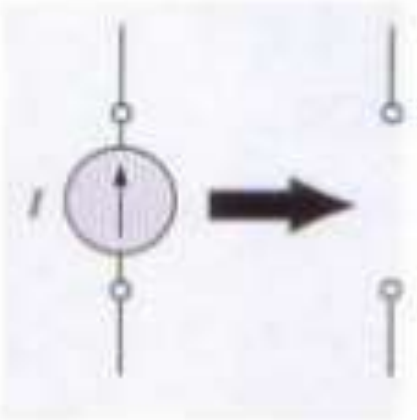

Current source is replaced by a Open Circuit

DIVISION RULE

- Kirchhoff's Voltage Law states that that “The algebraic sum of all the voltages in a loop must equal zero”. A practical application of this law is the voltage divider rule.
- Kirchhoff's Current Law states that“The algebraic sum of all currents entering and exiting a node must equal zero.” A practical Application of this law is current divider rule.
- A parallel circuit acts as a current divider as the current divides in all the branches in a parallel circuit.
- A series circuit act as a voltage divider as the voltage divides in all the branches in a series circuit.

VOLTAGE DIVISION RULE

- Calculate equivalent resistance**.**
- In series:

$$\mathbf{R_{eq} = R_1+R_2+R_3+ \ldots\ldots..+R_n}$$

- Calculate current by applying **Ohm's Law (I=V/R_{eq}).**
- Current remains same in series

$$\mathbf{I=I_1=I_2=I_3}$$

- As voltage divides in series, So Voltage Divider Rule states that,

$$\mathbf{V_x =V(R_x/ R_x+R_y+R_z)}$$

(or)

$$\mathbf{V_x = \text{total voltage (V)} *\left\{\frac{\text{(same branch resistance } (R_x)}{\text{total resistance } (R_x+R_y+R_z+\ldots\ldots..+R_n)}\right\}}$$

CURRENT DIVISION RULE

- Calculate equivalent resistance.
- In parallel circuit,

$$\mathbf{R_{eq} = R_1R_2\ R_3/R_2R_3+R_1R_3+R_2R_1}$$

- Calculate current by applying Ohm's Law($I=V/\ R_{eq}$).
- As voltage remains same in parallel circuit;

$$\mathbf{V_1=V_2=V_3=V}$$

- As current divides in parallel circuit,So according to current divider rule:

$$\mathbf{I_x=(R/R_t)\times I}$$

(or)

$$\mathbf{I_x = \text{total current (I)} *\left\{\frac{\text{(opposite branch resistance}}{\text{total resistance } (R_t)}\right\}}$$

Current division rule (CDR)

current in any branch is equal to the ratio of the opposite parallel branch resistance to the total resistance value, multiplied by the total current in the circuit.

eg.

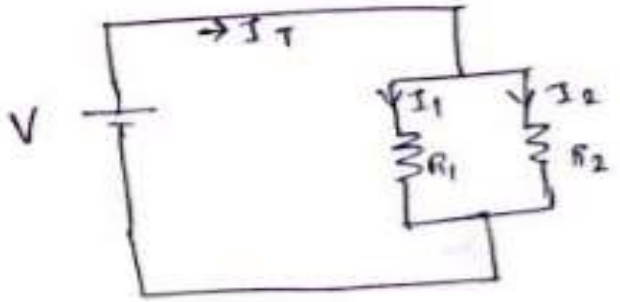

$$I = \text{Total current} \times \frac{\text{Opposite Resistance}}{\text{Total resistance}}$$

$$I_1 = I_T \times \frac{R_2}{R_1+R_2} \qquad I_2 = I_T \times \frac{R_1}{R_1+R_2}$$

Problems based on Superposition theorem.

Find the current through 3Ω resistance in circuit shown in fig using superposition theorem.

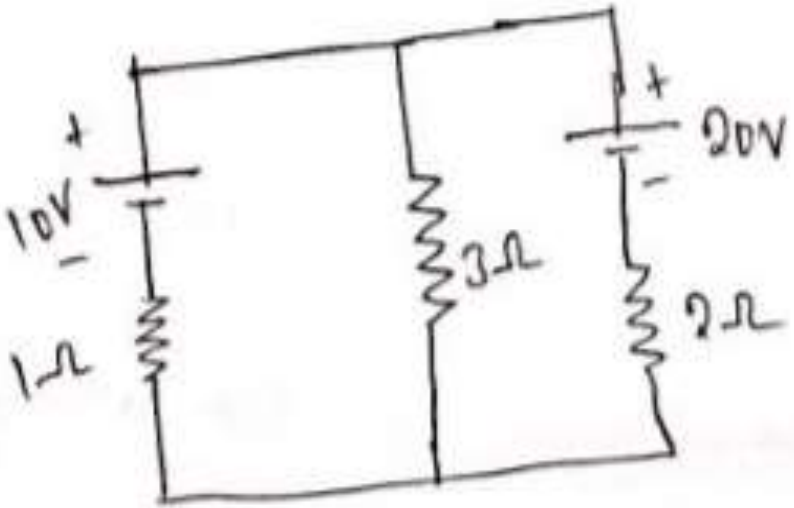

⇒

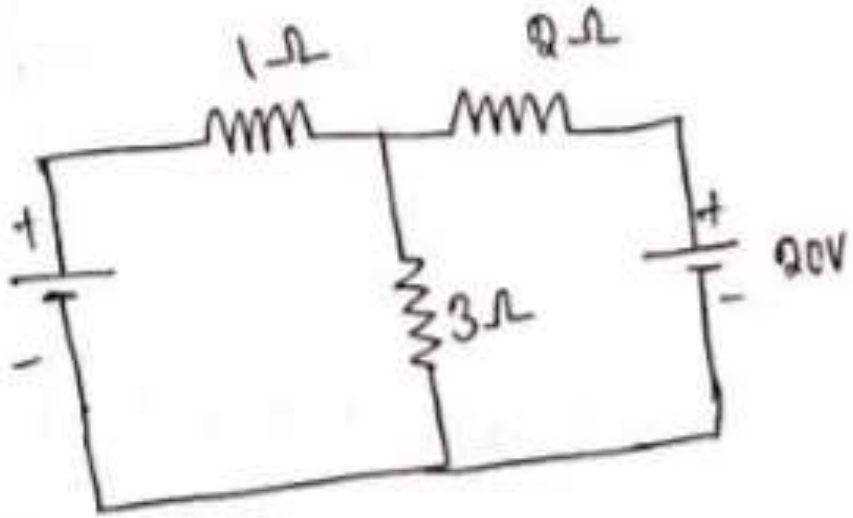

Total current through load $(I_L) = I_L' + I_L''$

I_L' ⇒ step 1 current , I_L'' = step 2 current

Step1 : 10V battery is acting alone and 20V battery is short circuited.

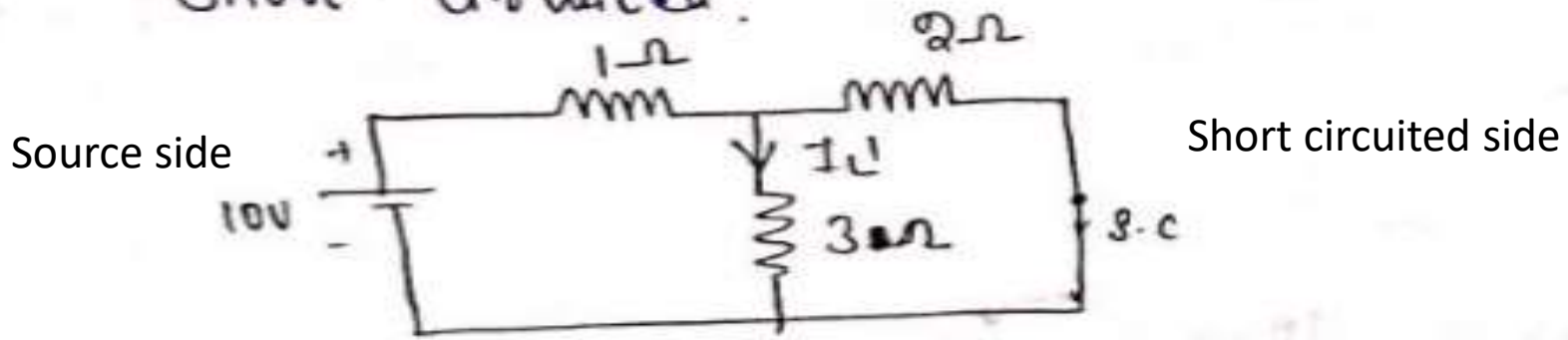

2Ω and 3Ω are connected in parallel.

$$R = 2 \| 3 \Rightarrow \frac{2 \times 3}{2+3} = 1.2\,\Omega$$

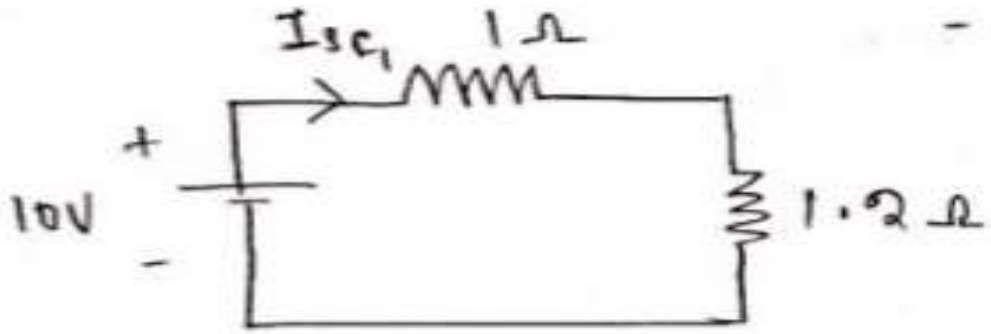

$$\Rightarrow I_{sc_1} = \frac{10}{1+1.2}$$

$$I_{sc_1} = 4.54\,A.$$

By current Division Rule. (should be applied to the initial circuit and from the short circuited end.)

$$I_L' = 4.54 \times \frac{2}{3+2} = 1.8182\,A.$$

$$\boxed{I_L' = 1.8182\,A}$$

<u>Step2</u>: 20V battery is acting alone and 10V is Short circuited.

Short circuited side

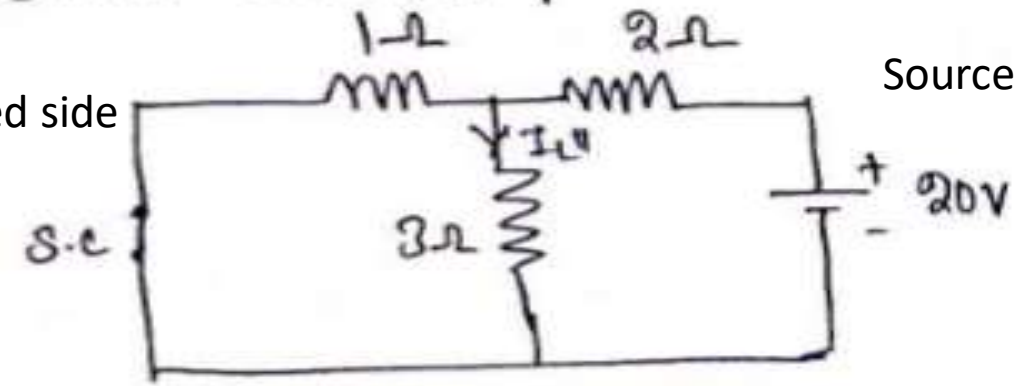

Source side

1 Ω and 3 Ω are in parallel.

$$1\Omega \parallel 3\Omega \Rightarrow \frac{1\times 3}{1+3}$$

$$= 0.75\,\Omega$$

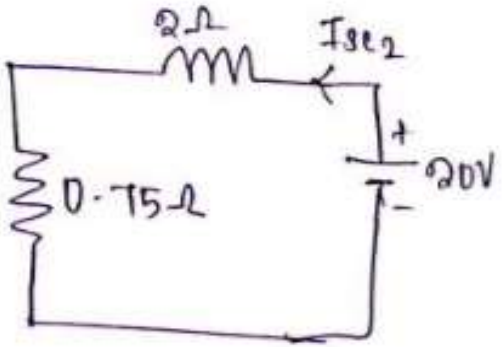

$$I_{sc_2} = \frac{20}{2+0.75} = 7.273 \text{ Amps}$$

By current division rule. (should be applied to the initial circuit and from the short circuited end.)

$$I_L'' = 7.273 \times \frac{1}{3+1} = 1.8182 A$$

$$\boxed{I_L'' = 1.8182 A}$$

Step 3 Find Total load current Both battery sources acting.

$$I_L = I_L' + I_L''$$

$$I_L = 1.8182 + 1.8182$$

$$\boxed{I_L = 3.6364 \text{ Amps}}$$

(2) Determine the Voltage across the 4Ω resistor by using Super position theorem.

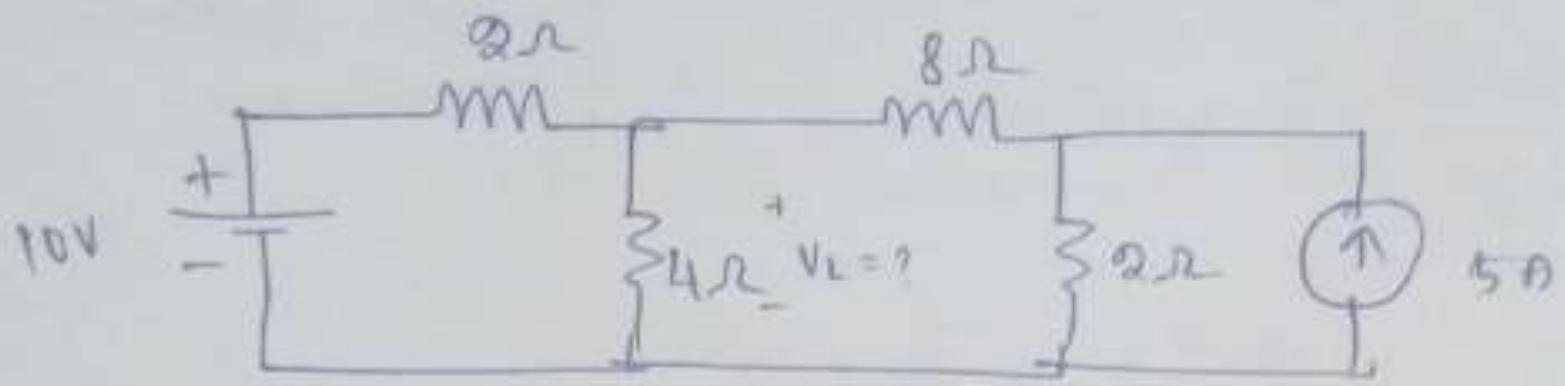

Step 1 10V battery is acting alone.
5A current source is open circuited.

Source side

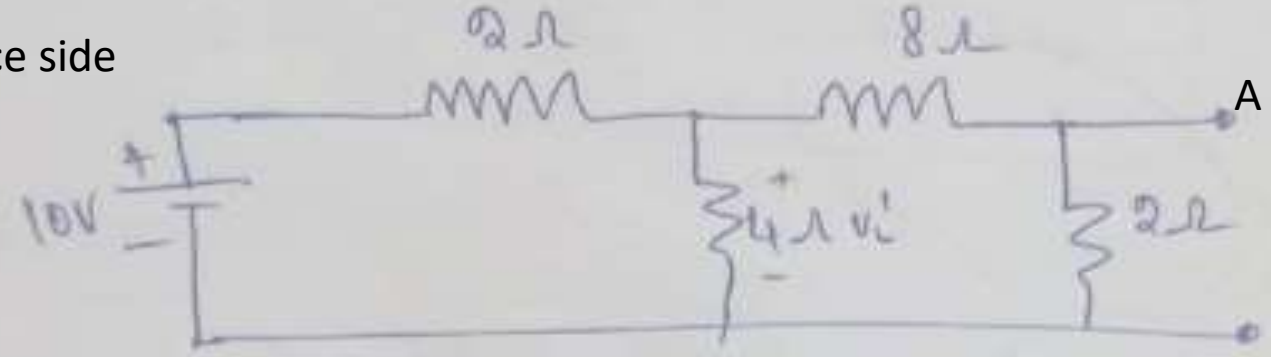

8Ω and 2Ω series.
= 10Ω

Open circuited side

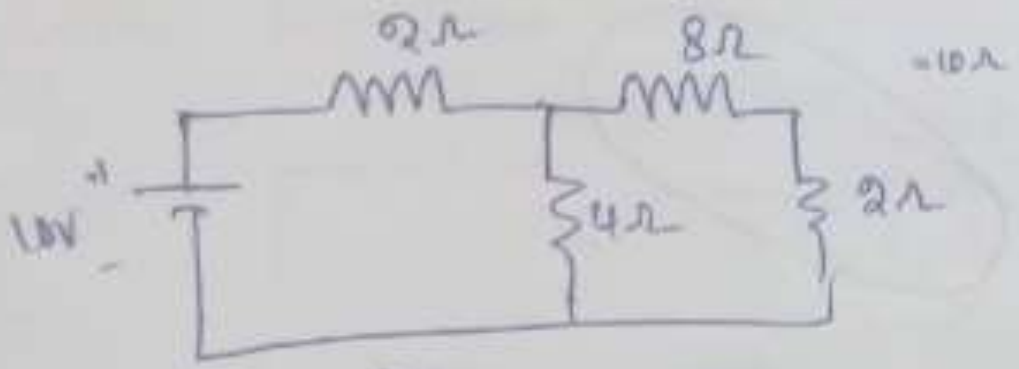

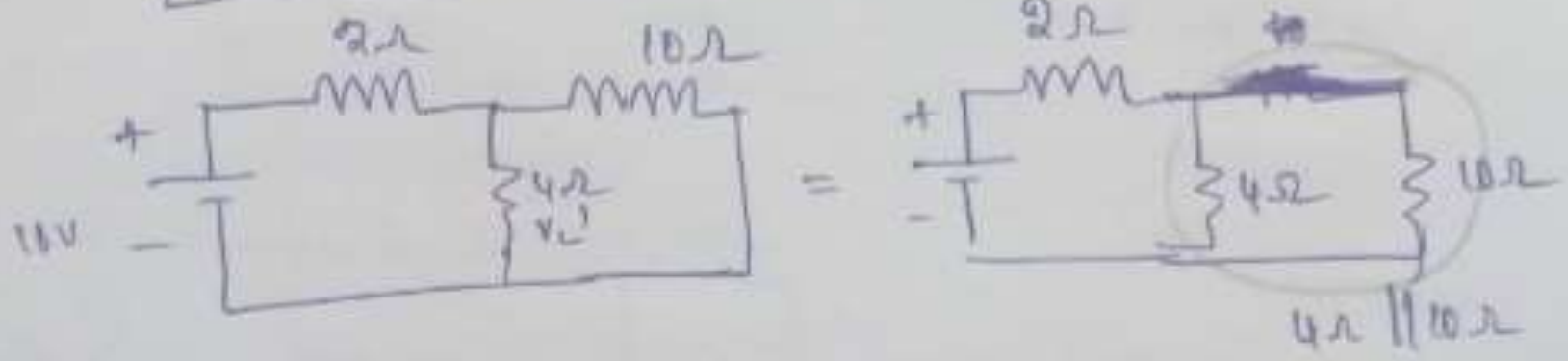

$$\frac{4 \times 10}{4+10} = \frac{40}{14} = 2.86\,\Omega$$

Final reduced circuit will be:

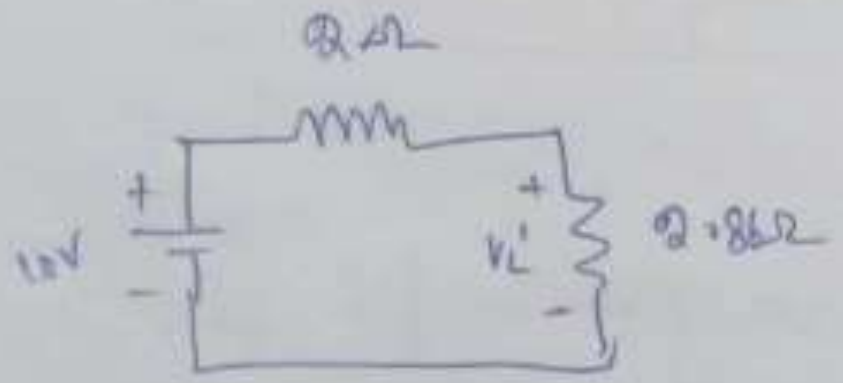

(reduced load resistance)

Total Voltage = 10V

Apply Voltage division rule.

(should be applied to the final reduced circuit.)

Voltage across 4Ω resistor $\left\{ V_L' \right\}$ = Total Voltage × $\dfrac{\text{Branch resistance}}{\text{Total resistance}}$

$$= 10 \times \frac{2.86}{2+2.86}$$

$$= \frac{28.6}{4.86} = 5.88V$$

$$\boxed{V_L' = 5.88V}$$

Step 2 :

5A acting alone and 10V battery is Short circuited.

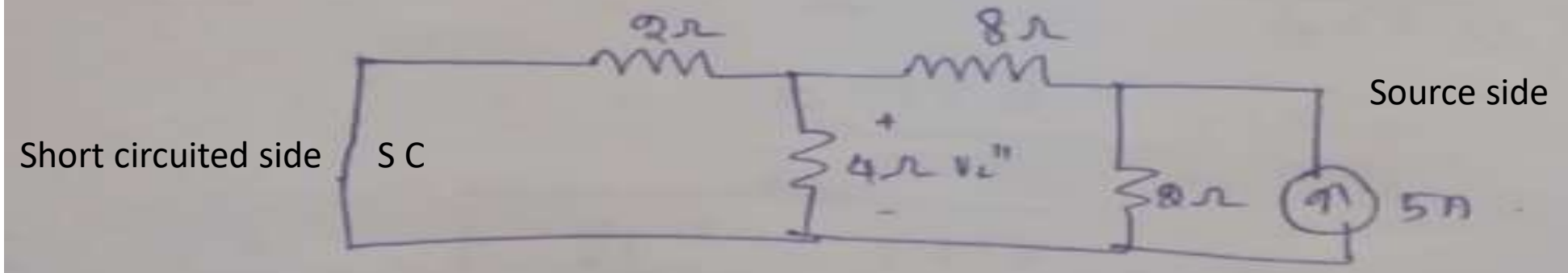

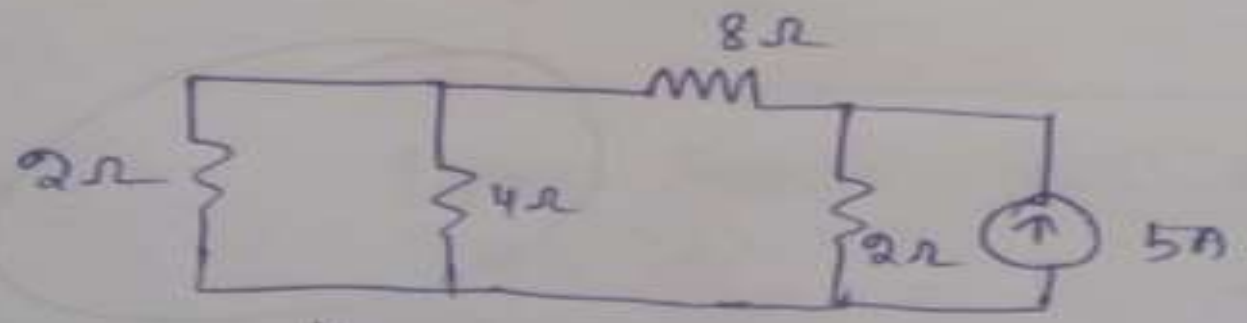

$2\Omega \parallel 4\Omega$

$$\frac{2 \times 4}{2+4} = \frac{8}{6} = 1.33\Omega$$

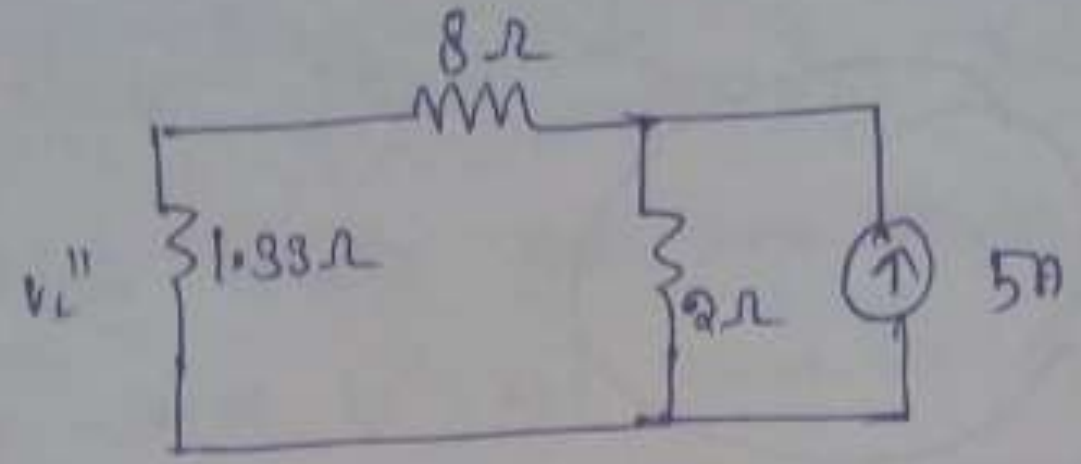

$V = 5A \cdot 2 = 10V$

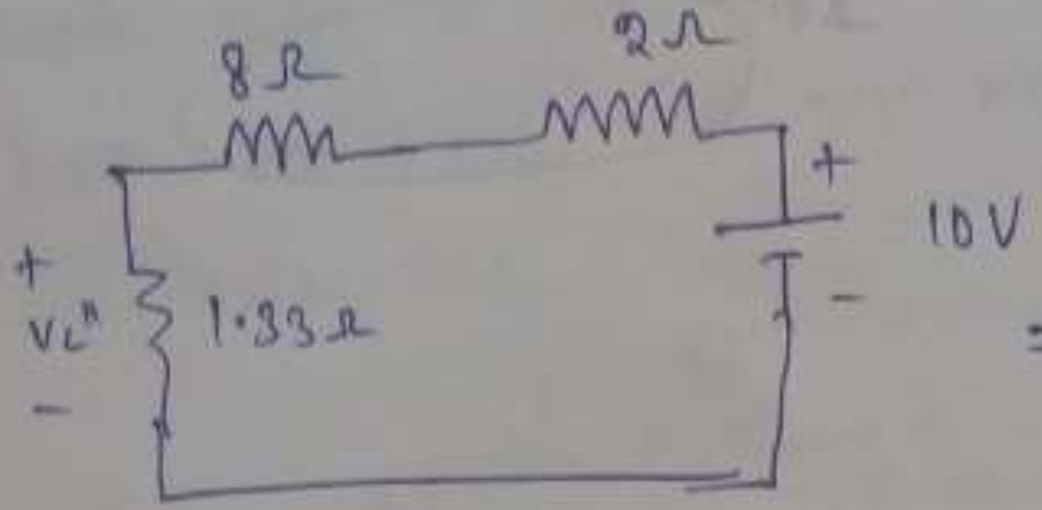

$\Rightarrow$

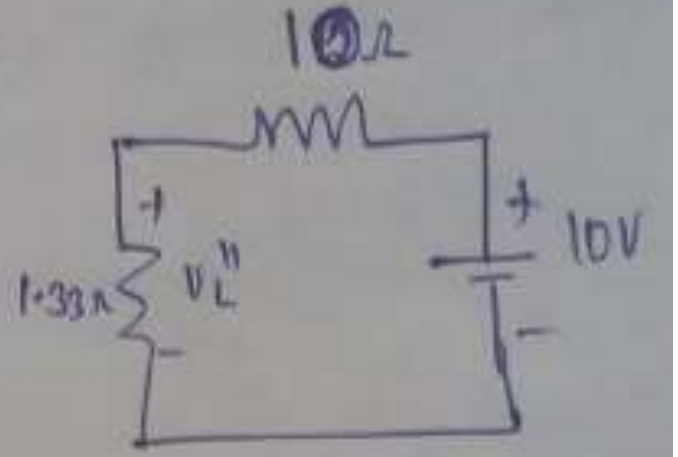

Apply Voltage division rule.

(should be applied to the final reduced circuit.)

same Branch Resistance

Voltage across 4Ω resistor (V_L'') = Total Voltage × $\frac{\text{Branch Resistance}}{\text{Total Resistance}}$

$$= 10 \times \frac{1.33}{10 + 1.33}$$

$$= \frac{13.3}{11.33} = 1.17\,V$$

$$\boxed{V_L'' = 1.17\,V}$$

Step3 Both Sources are acting

$$V_L = V_L' + V_L''$$

$$= 5.88 + 1.17$$

Voltage across 4Ω resistor.

$$\boxed{V_L = 7.05V}$$

MACHINES

DC GENEATOR

- **A dc generator is an electrical machine** which converts mechanical energy into **direct current electricity**. This energy conversion is based on the principle of production of dynamically induced EMF.

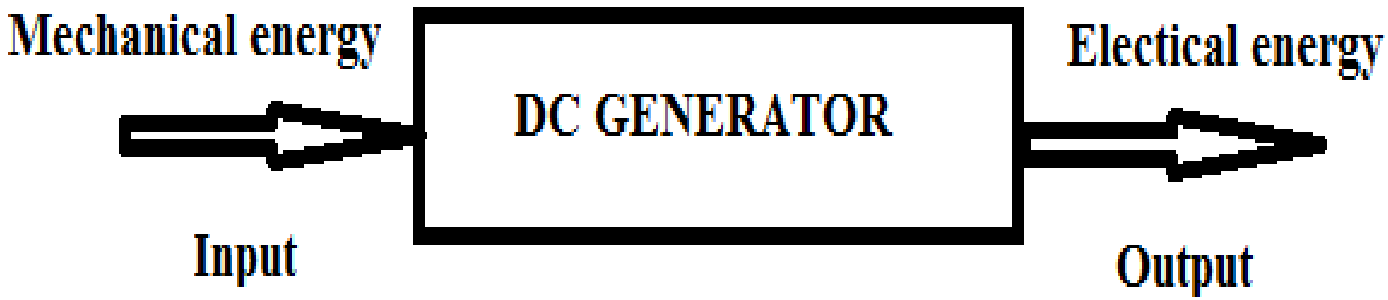

DC GENEATOR

- **Principle:**

Faraday’s Law of electromagnetic induction

- **Faraday’s law:**

“Whenever a conductor is moved in a magnetic field dynamically induced EMF (Electro Motive Force) is produced in the conductor.”

The Direction of induced Emf is given by Fleming’s right hand Rule.

Fleming's right hand Rule

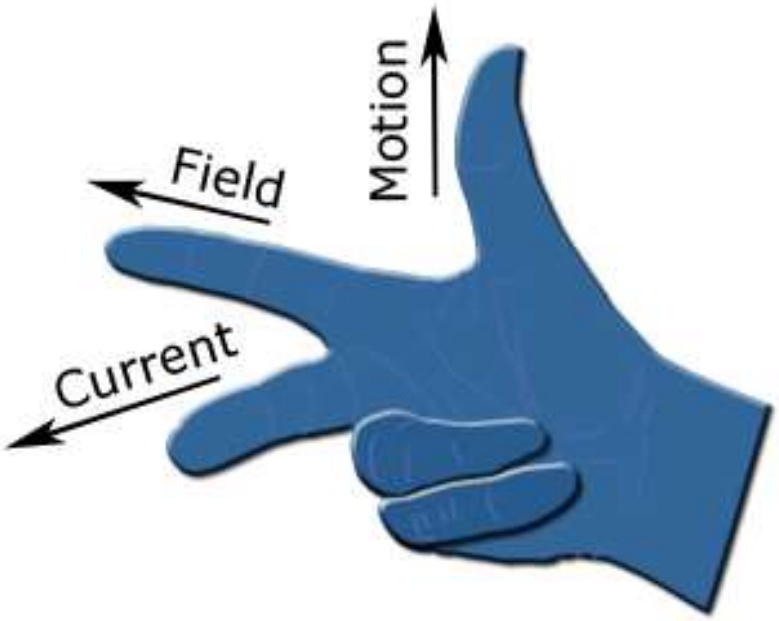

The right hand is held with the thumb, index finger and middle finger mutually perpendicular to each other (at right angles), as shown in the diagram.

- The thumb is pointed in the direction of the motion of the conductor relative to the magnetic field.
- The first finger is pointed in the direction of the magnetic field. (north to south)
- Then the second finger represents the direction of the induced or generated current within the conductor (from the terminal with lower electric potential to the terminal with higher electric potential, as in a voltage source)

BASIC CONSTRUCTION OF A DC GENERATOR.

- **DC machine**

A DC generator can be used as a DC motor without any constructional changes and vice versa is also possible. Thus, a DC generator or a DC motor can be broadly termed as a **DC machine**. These basic constructional details are also valid for the **construction of a DC motor**.

Construction of DC machine

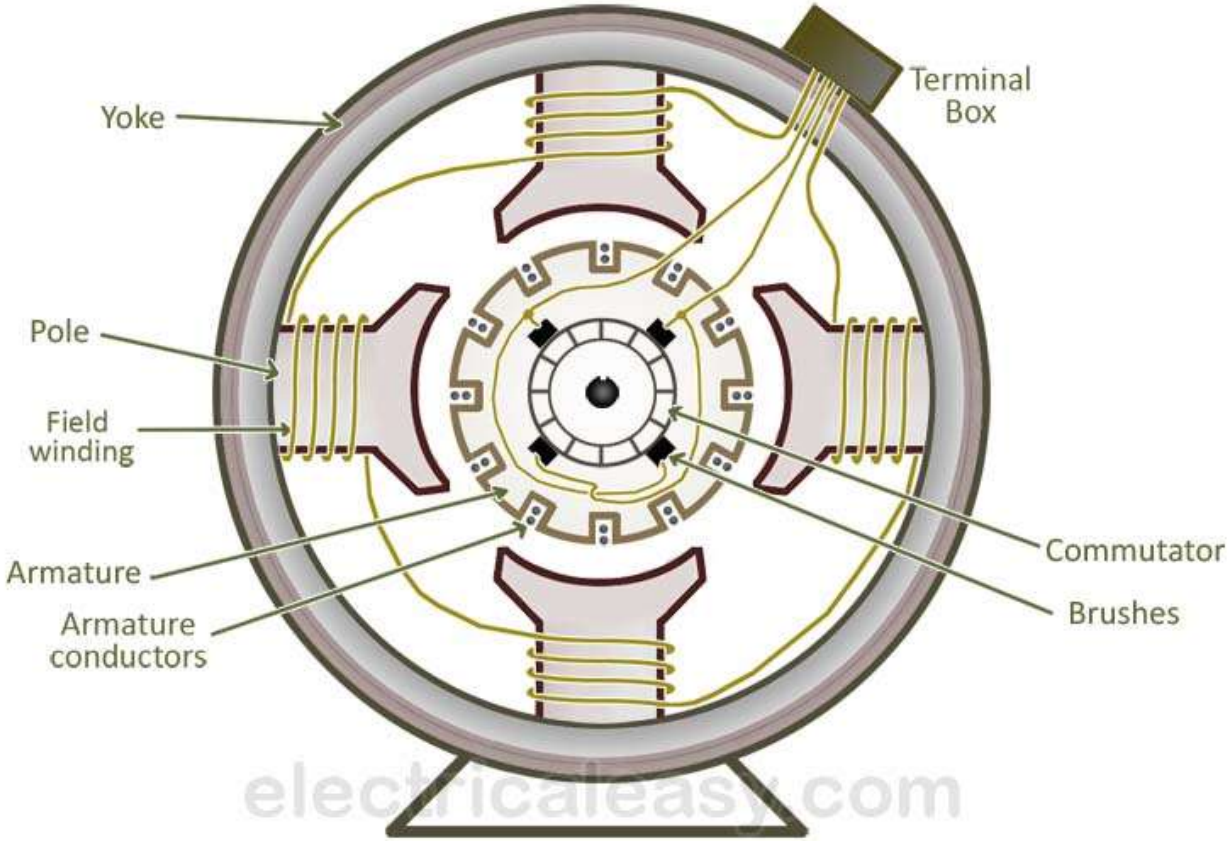

The above figure shows constructional details of a simple **4-pole DC machine**. A DC machine consists of two basic parts; stator and rotor.

- Basic constructional parts of a DC machine are described below.

1. Magnetic Frame (or) Yoke
2. Poles and pole shoes
3. Field winding
4. Armature core
5. Armature winding
6. Commutator and brushes.

- **Yoke:** The outer frame of a dc machine is called as yoke. It act as a protecting cover of the whole machine and provides mechanical support for the whole machine. It is made up of cast iron or steel. It also carries the magnetic flux produced by the field winding.

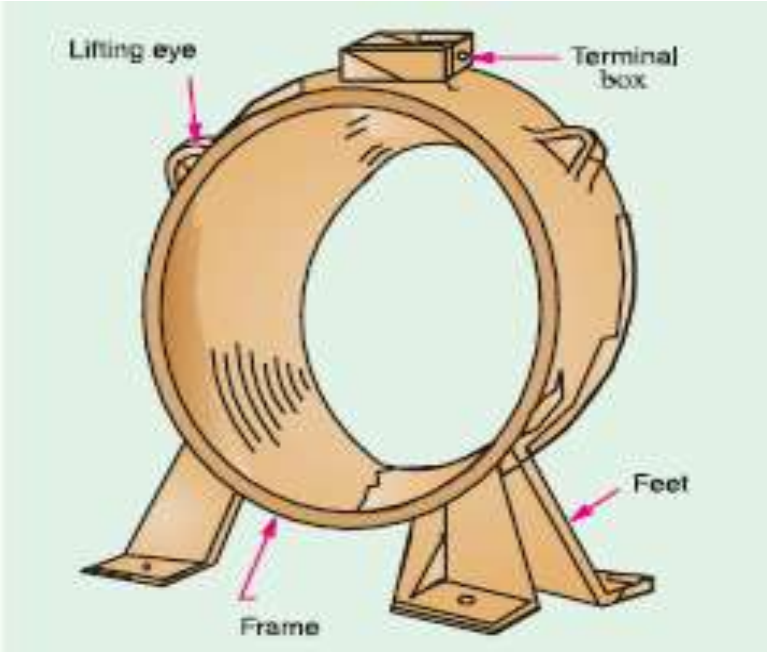

- **Poles and pole shoes:** Poles are joined to the yoke with the help of bolts or welding. They carry field winding and pole shoes are fastened to them. Pole shoes serve two purposes; (i) they support field coils and (ii) spread out the flux in air gap uniformly.

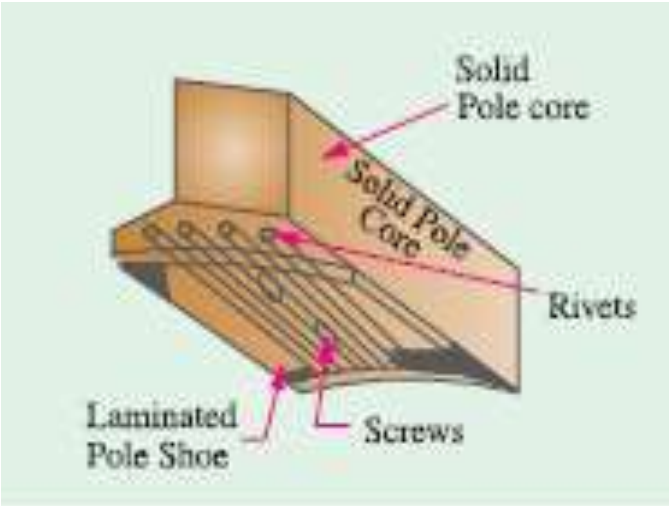

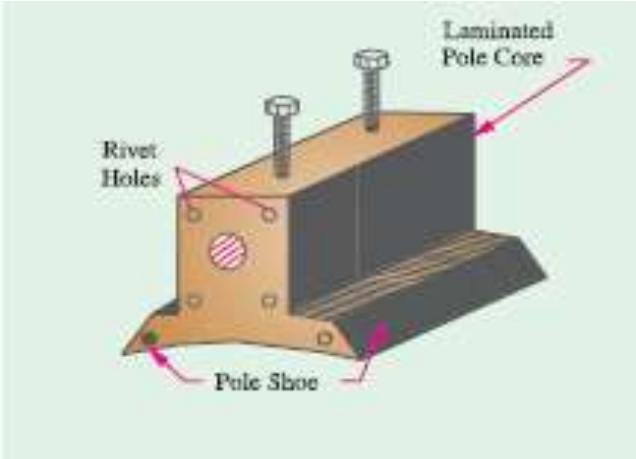

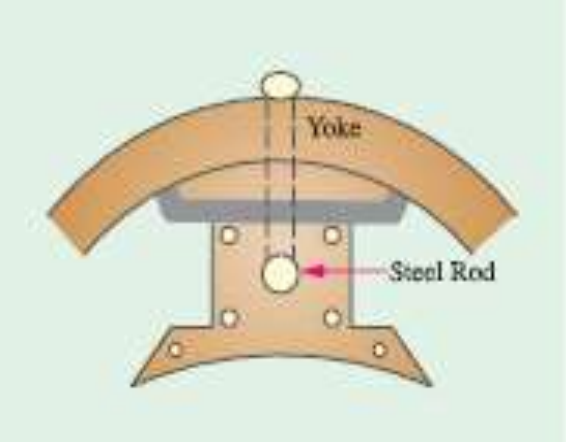

- **Field winding:** They are usually made of copper. Field coils are former wound and placed on each pole and are connected in series. They are wound in such a way that, when energized, they form alternate North and South poles.

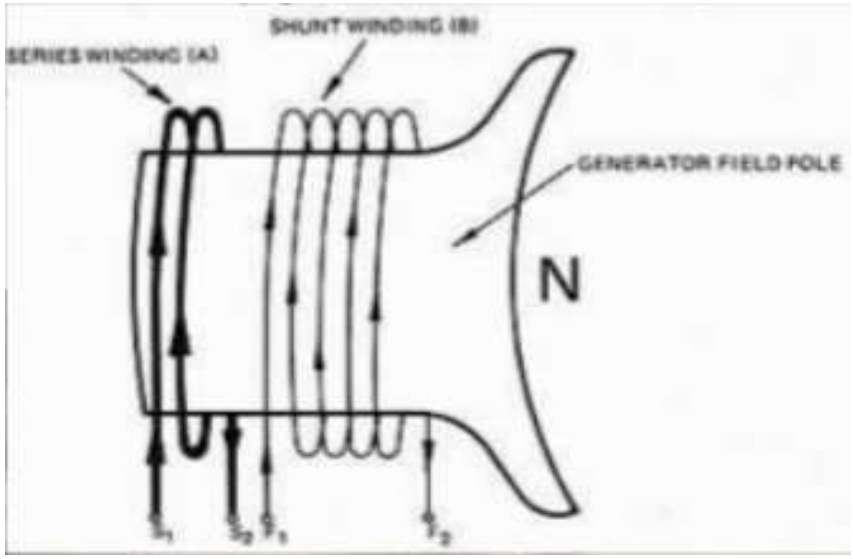

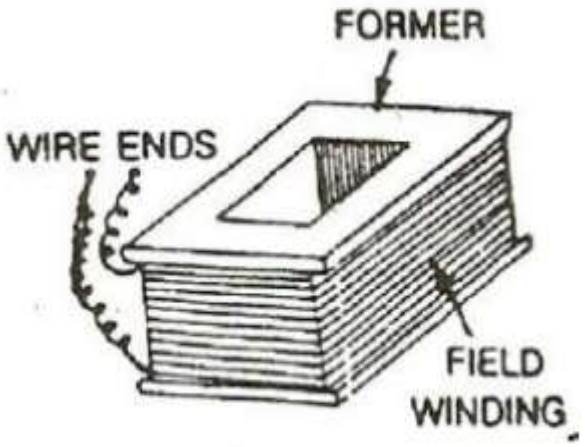

- **Armature core:** Armature core is the rotor of a dc machine. It is cylindrical in shape with slots to carry armature winding. The armature is built up of thin laminated circular steel disks for reducing eddy current losses. It may be provided with air ducts for the axial air flow for cooling purposes. Armature is keyed to the shaft.

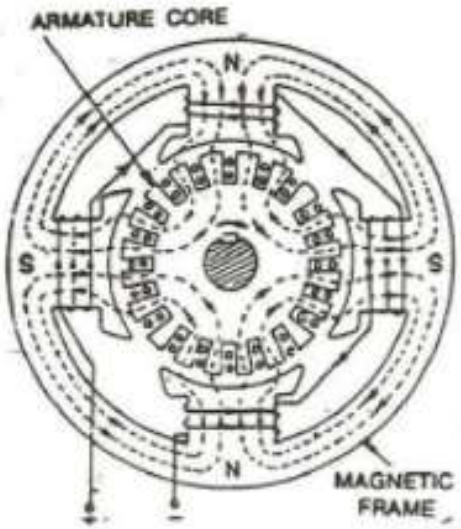

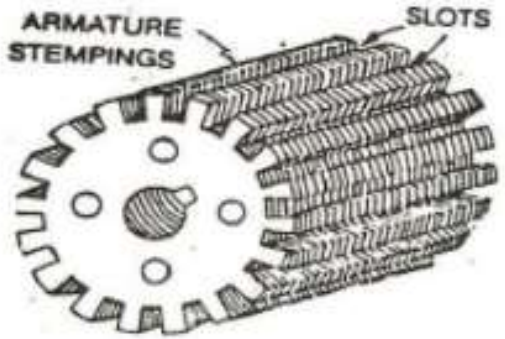

- **Armature winding:** It is usually a former wound copper coil which rests in armature slots. The armature conductors are insulated from each other and also from the armature core.
- Armature winding can be wound by one of the two methods; lap winding or wave winding. Double layer lap or wave windings are generally used. A double layer winding means that each armature slot will carry two different coils.

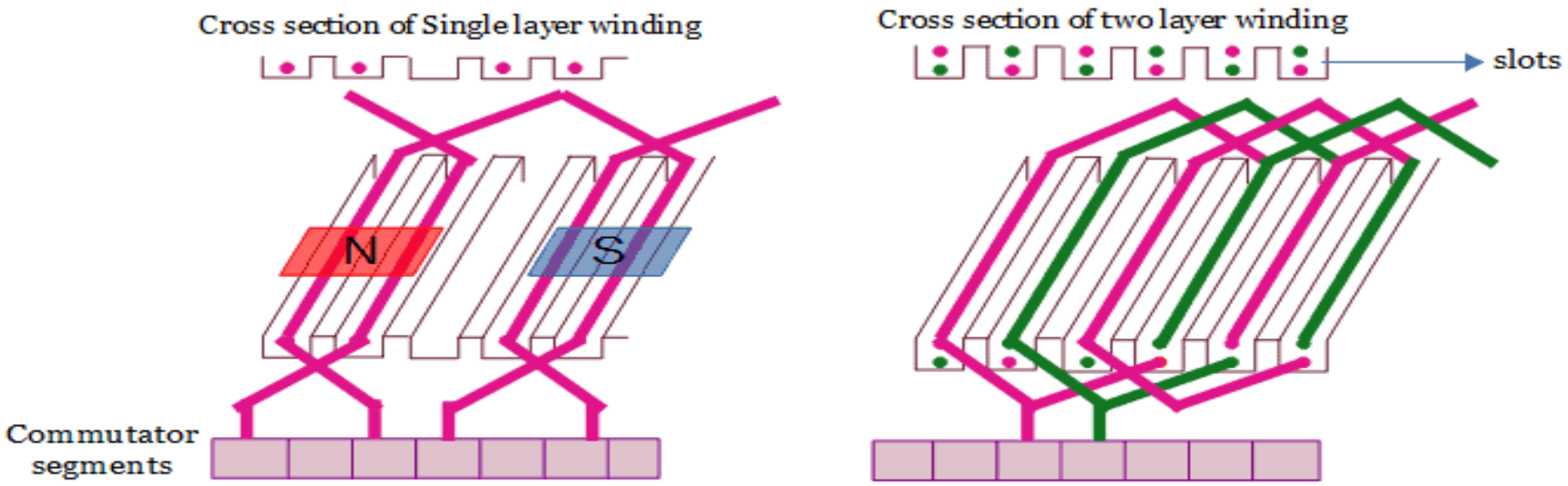

Cross section of single layer and two layer winding

- **Commutator and brushes:**

The commutator converts the Alternating EMF in to Direct EMF.It is made up of copper and insulated by mica.

The brushes are made up of Carbon (or) Graphite. It is used to collect the current from the commutator. It is rectangular in shape.

Working Principle of A DC Generator

- According to Faraday's laws of electromagnetic induction, whenever a conductor is placed in a varying magnetic field (OR a conductor is moved in a magnetic field), an emf (electromotive force) gets induced in the conductor.
- The magnitude of induced emf can be calculated from the emf equation of dc generator. If the conductor is provided with a closed path, the induced current will circulate within the path.
- In a DC generator, field coils produce an electromagnetic field and the armature conductors are rotated into the field. Thus, an electromagnetically induced emf is generated in the armature conductors. The direction of induced current is given by Fleming's right hand rule.

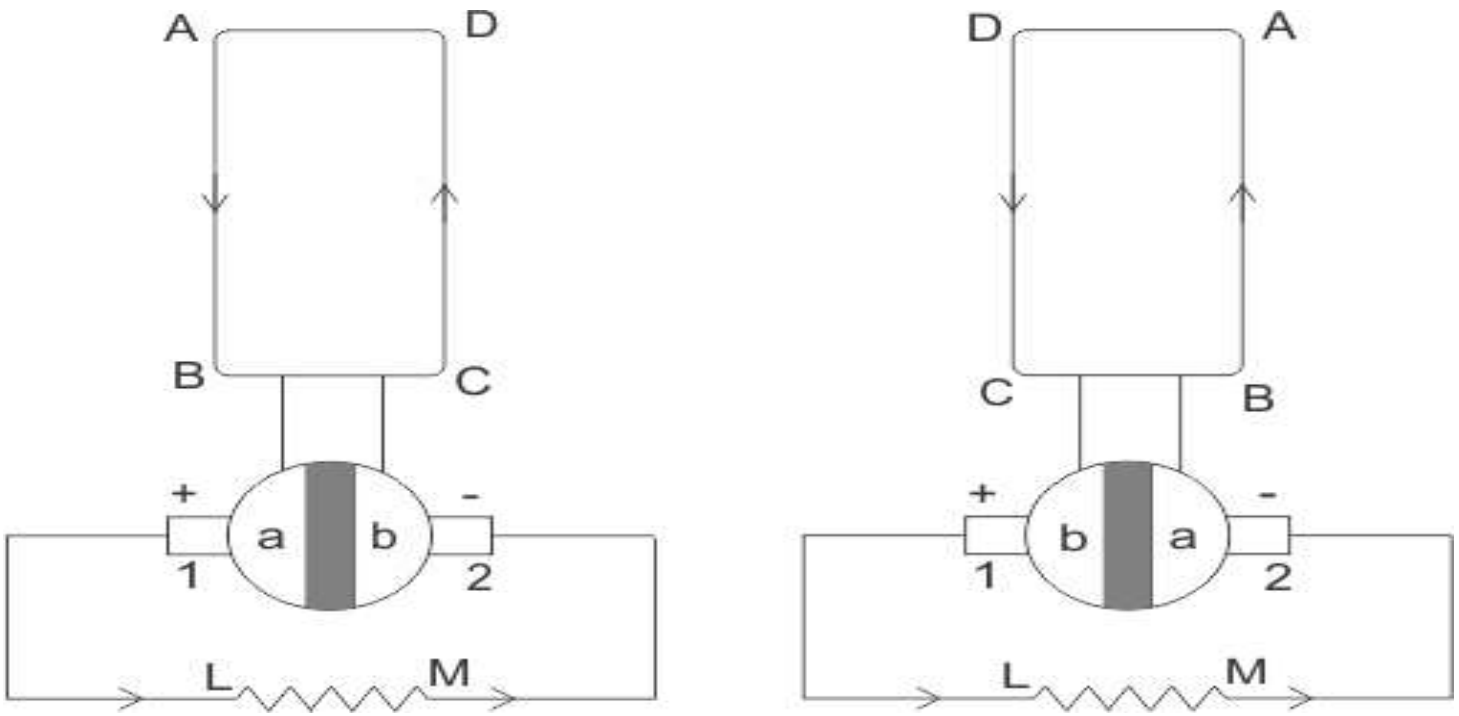

We can see that in the first half of the revolution current always flows along ABLMCD, i.e., brush no 1 in contact with segment a. In the next half revolution, in the figure, the direction of the induced current in the coil is reversed. But at the same time the position of the segments a and b are also reversed which results that brush no 1 comes in touch with the segment b. Hence, the current in the load resistance again flows from L to M. The waveform of the current through the load circuit is as shown in the figure. This current is unidirectional.

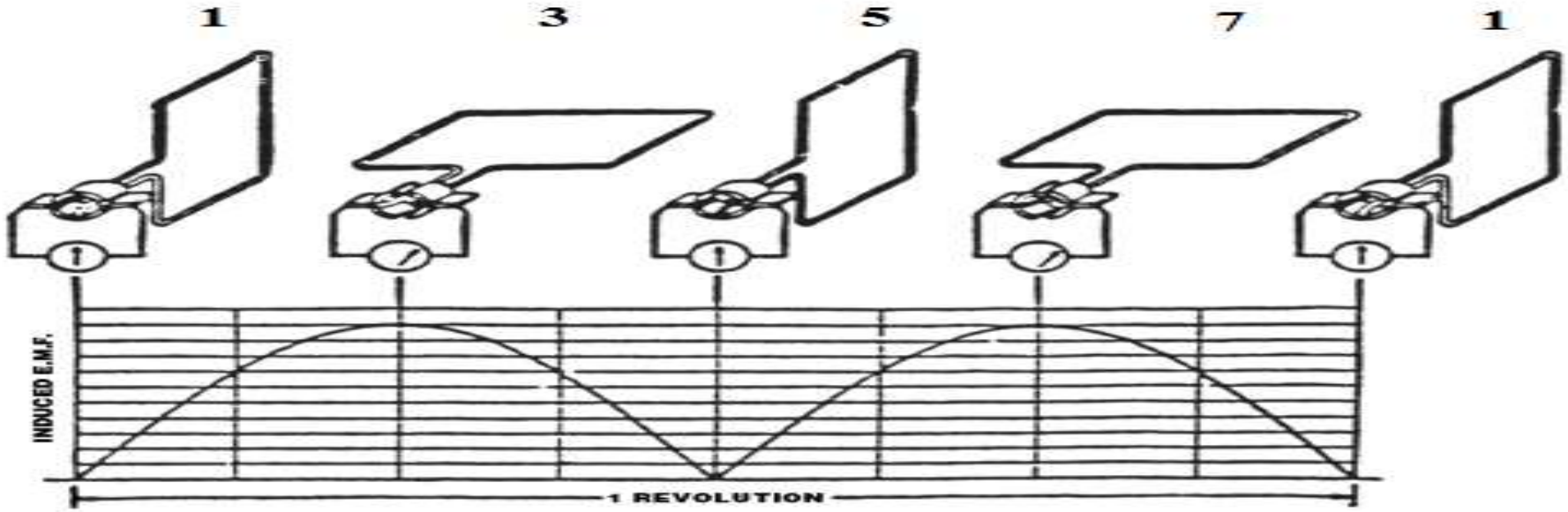

<u>Position 1 (θ=0°)</u>

The flux link with coil = Maximum

The rate of change of Flux linkage=Minimum (because coil does not cut any Flux lines)

No emf is induced in the coil at position 1

Position 3 (θ=90°)

- Coil plane is horizontal to the Flux line (1 to 3)
- The flux link with coil = Minimum
- The rate of change of Flux linkage=Maximum (coil cut the Flux lines)

Maximum emf induced in the coil at position 3

Position 5 (θ=180°) (position 3 to 5)

- The flux link with coil = Maximum
- The rate of change of Flux linkage=Minimum (because coil does not cut any Flux lines)

No emf induced in the coil at position 5

Position 7 (θ=270°) position (5to 7)

- The EMF induced in the coil is reverse direction
- The flux link with coil = Minimum
- The rate of change of Flux linkage=Negative Maximum (coil cut the Flux lines)

Negative Maximum emf induced in the coil at position 7

Position 7 to 1 (θ=360°)

- The flux link with the coil = Maximum
- The rate of change of Flux linkage=Minimum (because coil does not cut any Flux lines)

Emf is induced in the coil is Zero at position 1

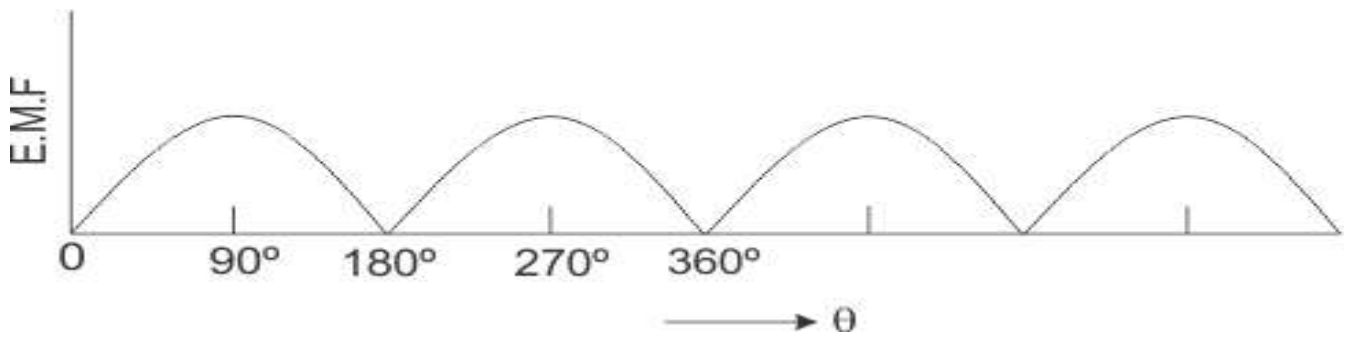

The above content is the basic **working principle of DC generator**, explained by single loop generator model. The positions of the brushes of DC generator are so that the changeover of the segments a and b from one brush to other takes place when the plane of rotating coil is at a right angle to the plane of the lines of force. It is to become in that position, the induced emf in the coil is zero.

TYPES OF DC GENERATORS

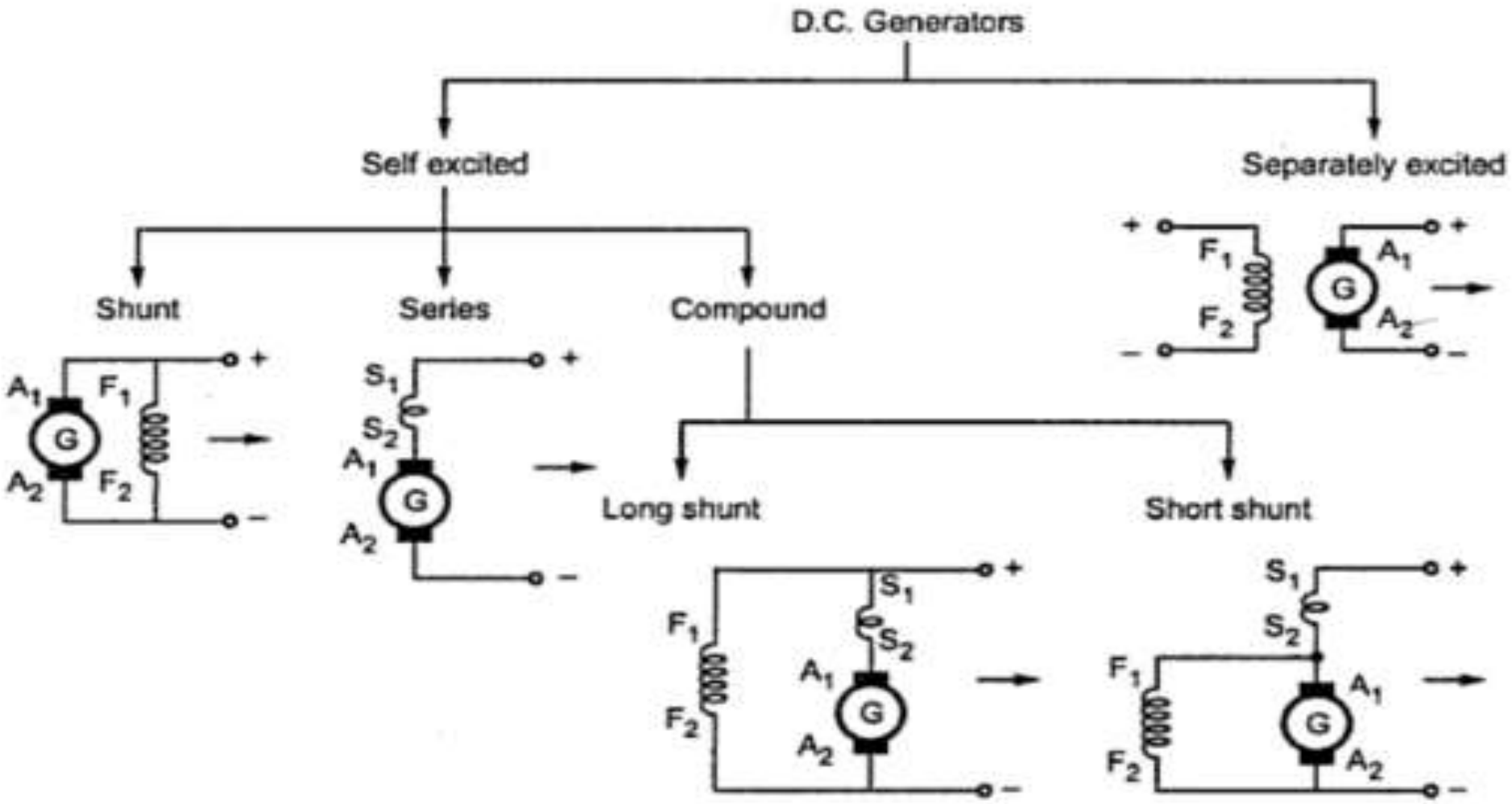

Separately excited D.C generator

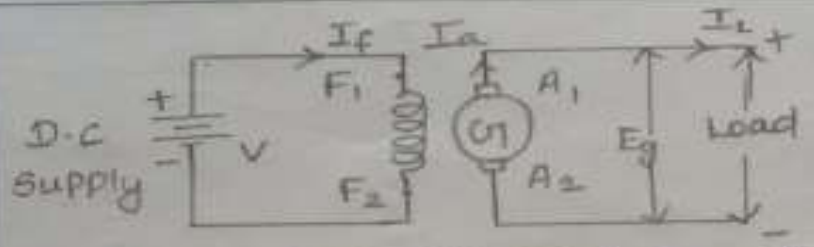

If the field winding is supplied from an independent external source is called as separately excited D.C generator

Armature Current $I_a = I_L$

Electric Power developed $= E_g I_a$

Self excited D.C generator

If the field winding of the generator is supplied from the armature of the generator itself. Here, $I_a \rightarrow$ armature current

$I_L \rightarrow$ Load current

$I_{sh} \rightarrow$ shunt field current

DC Shunt generator

The field winding is connected in parallel with the armature winding.

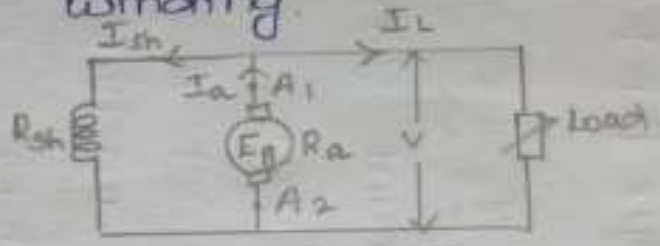

$I_a = I_L + I_{sh}$

$I_{sh} = V / R_{sh}$

DC Series generator

The field winding is connected in series with the armature winding.

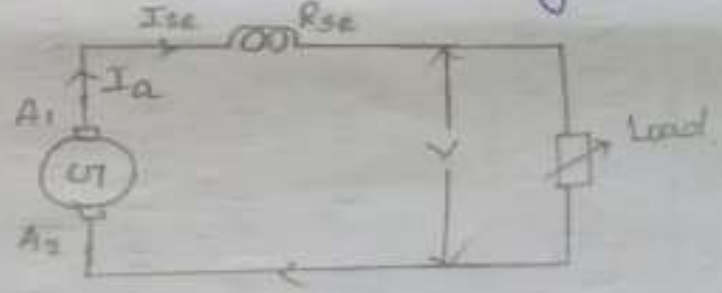

$I_a = I_{se} = I_L$

D.C Compound generator

Two sets of field winding one is in series and other one in parallel with the armature.

Long Shunt generator

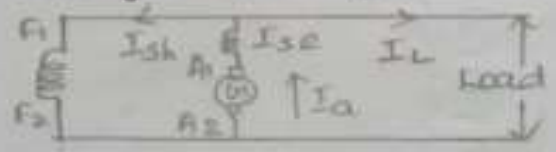

$I_a = I_{se} = I_L + I_{sh}$

Short Shunt generator

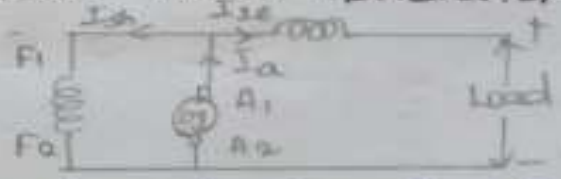

$I_{se} = I_L + I_{sh}$, $I_a = I_{se} + I_{sh}$

EMF equation of DC Generator

$$E_g = \frac{PZ\,\varphi\,N}{60\,A} \quad \text{volts}$$

Where $\mathbf{E_g}$ is the **Generated Emf**

P – Number of poles of the machine

ϕ – Flux per pole in Weber.

Z – Total number of armature conductors.

N – Speed of armature in revolution per minute (r.p.m).

A – Number of parallel paths in the armature winding.

Applications of DC Generator

1. Shunt Generator
    - (i) Battery Charger
    - (ii) Act as a exciter for Synchrous Machines
2. Series Generator
    - (i) Booster in Transmission Lines
    - (ii) Traction Applications.
3. Compound Generator
    - (i) Voltage Regulators
    - (ii) Compensation for Control system applications.

U20EEEJ01 BASIC ELECTRICAL AND ELECTRONICS ENGINEERING

What are Conductors?

Conductors are the materials or substances which allow electricity to flow through them. They conduct electricity because they allow electrons to flow easily inside them from atom to atom. Also, conductors allow the transmission of heat or light from one source to another.

Examples of Conductors

•Material such as silver is the best conductor of electricity. But, it is costly and so, we don't use silver in industries and transmission of electricity.

•Copper, Brass, Steel, Gold, and Aluminium are good conductors of electricity. We use them in electric circuits and systems in the form of wires.

•Mercury is an excellent liquid conductor. Thus, this material finds use in many instruments.

Insulators

Insulators are the materials or substances which resist or don't allow the current to flow through them. In general, they are solid in nature. Also, insulators are finding use in a variety of systems. As they do not allow the flow of heat. The property which makes insulators different from conductors is its resistivity. Furthermore, insulators don't have any free electrons. It is the main reason why they don't conduct electricity.

Examples of Insulators

•Glass is the best insulator as it has the highest resistivity.

•Plastic is a good insulator and it finds its use in making a number of things.

•Rubber is a common material used in making tyres, fire-resistant clothes and slippers.

What are Semiconductors?

Semiconductors are materials which have a conductivity between conductors (generally metals) and nonconductors or insulators (such as most ceramics). Semiconductors can be pure elements, such as silicon or germanium, or compounds such as gallium arsenide or cadmium selenide. In a process called doping, small amounts of impurities are added to pure semiconductors causing large changes in the conductivity of the material.

Common elemental semiconductors are **silicon and germanium**.

WHAT ARE ELECTRICAL DEVICES?

- It uses the metal for conduction. These metals are pure conductors.
- The electrical devices mainly work on the high alternating current. The power consumption of the electrical devices is also very high.
- The devices which convert the current into other forms of energy or work such type of devices is known as the electrical devices.

WHAT ARE ELECTRIONIC DEVICES?

- It uses semiconducting materials for conduction.
- There is no natural semiconductors. We convert conductors to semiconductors by the method called dopping.
- The devices which control the flow of electrons for performing the particular task such type of devices is known as the electronic devices.

CHARGE AND CURRENT

- **Charge**
  - most basic quantity in an electric circuit
  - is an electrical property of the atomic particles of which matter consists, measured in coulombs (C).
  - charge e *on an electron is* negative and equal in magnitude to $1.602\times10^{-19}\,C$, *while a proton carries* a positive charge of the same magnitude as the electron. The presence of equal numbers of protons and electrons leaves an atom neutrally charged.

- **Current** - is the flow of electrons. It is measured in amperes.

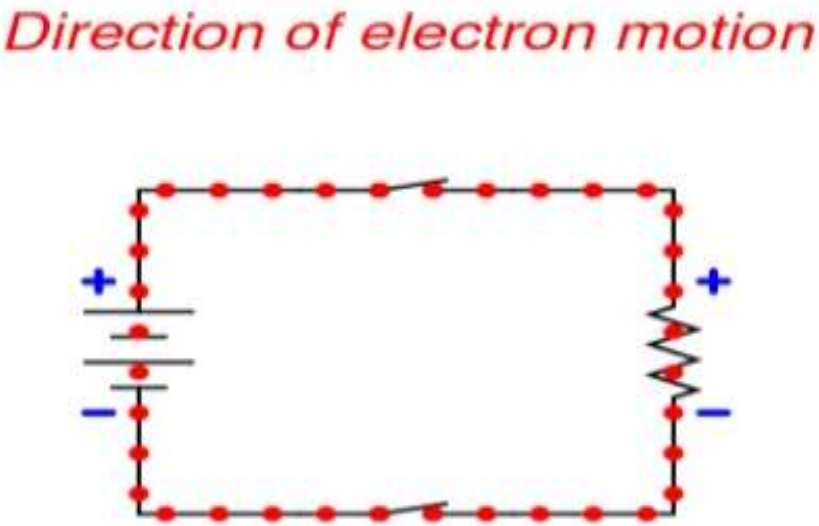

- **Resistance** (ohms, Ω) is the ability to oppose an electrical current.

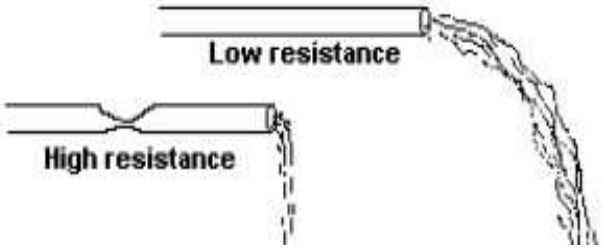

- **Electromotive Force (EMF)** is the force that moves electrons through conductors. Its unit of measure is the Volt. Think of it as pressure.

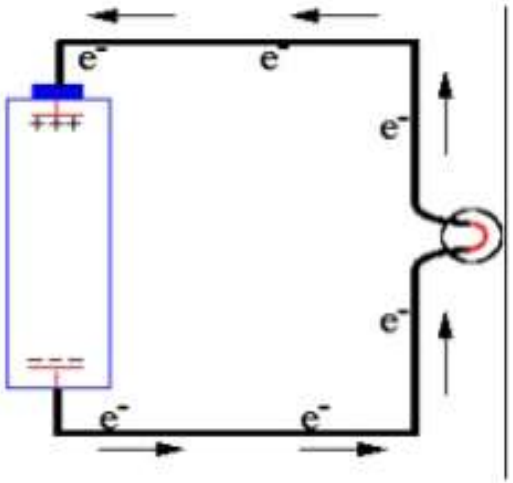

- **Voltage Source** - has two terminals (+ and -). Some examples are car batteries (12 volts DC), D cell batteries (1.5 volts DC) and a wall socket (120 volts AC).

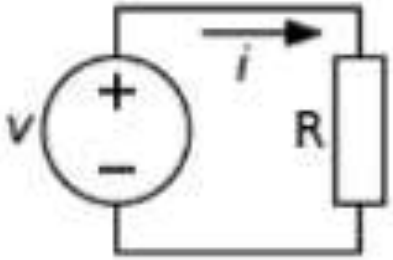

What is the Difference Between AC and DC Currents

- In today’s world electricity is most important next to the oxygen in the human. When the electricity was invented many changes have taken place over the years.
- The dark planet turned into a planet of lights. In fact, it made life so simple in all circumstances. All the devices, industries, offices, houses, technology, computers run on electricity.
- Here energy will be in two forms, i.e.
- alternating current (AC) and
- direct current (DC).

Alternating Current (AC)

Alternating current is defined as the flow of charge that changes direction periodically. The result obtained will be, the voltage level also reverses along with the current. Basically, AC is used to deliver power to industries, houses, office buildings, etc.

Direct Current (DC) Source

In a DC circuit, electrons emerge from the minus or negative pole and move towards the plus or positive pole. Some of the physicists define DC as it travels from plus to minus.

Working and Difference between AC and DC

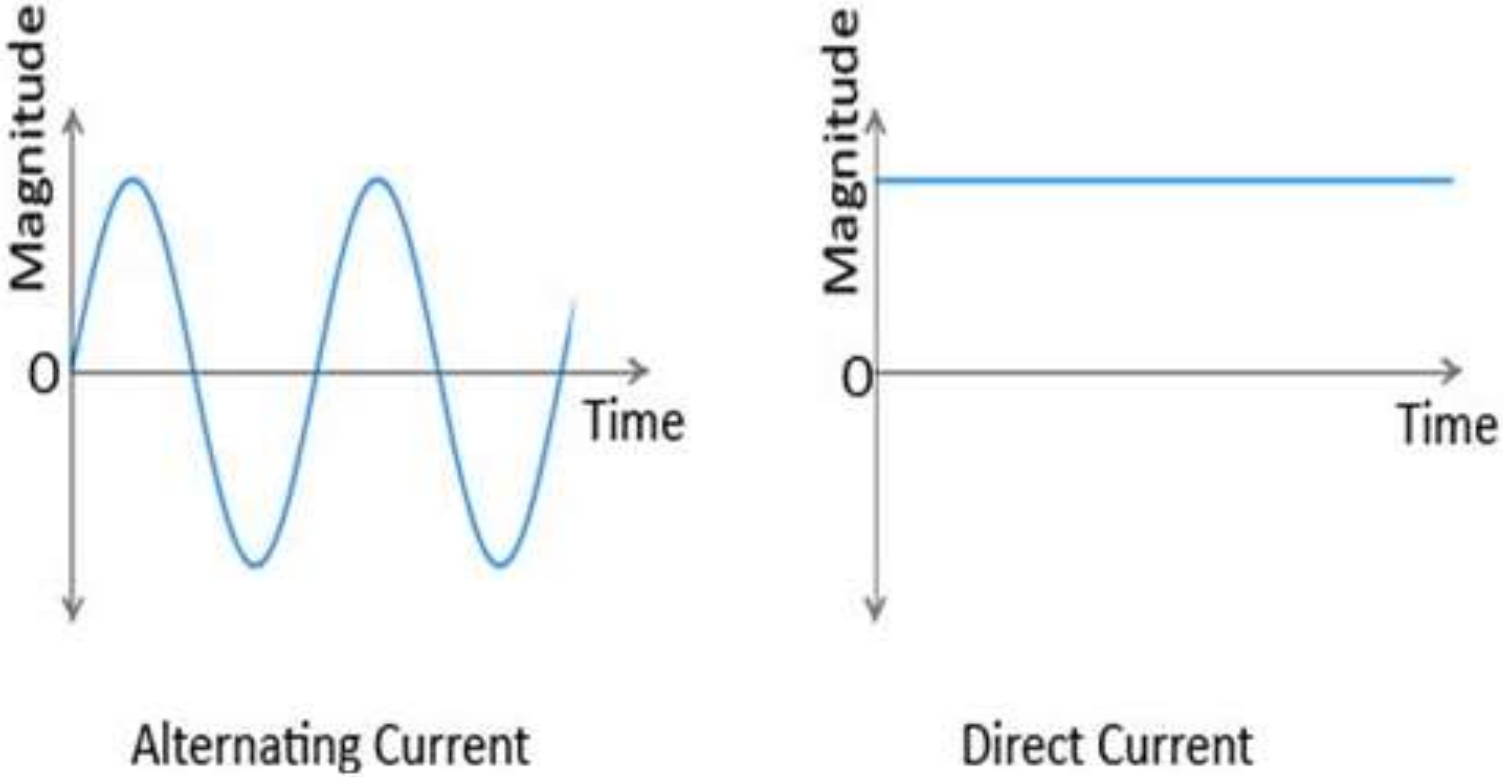

Difference between AC and DC

LIST OF BASIC SYMBOLS

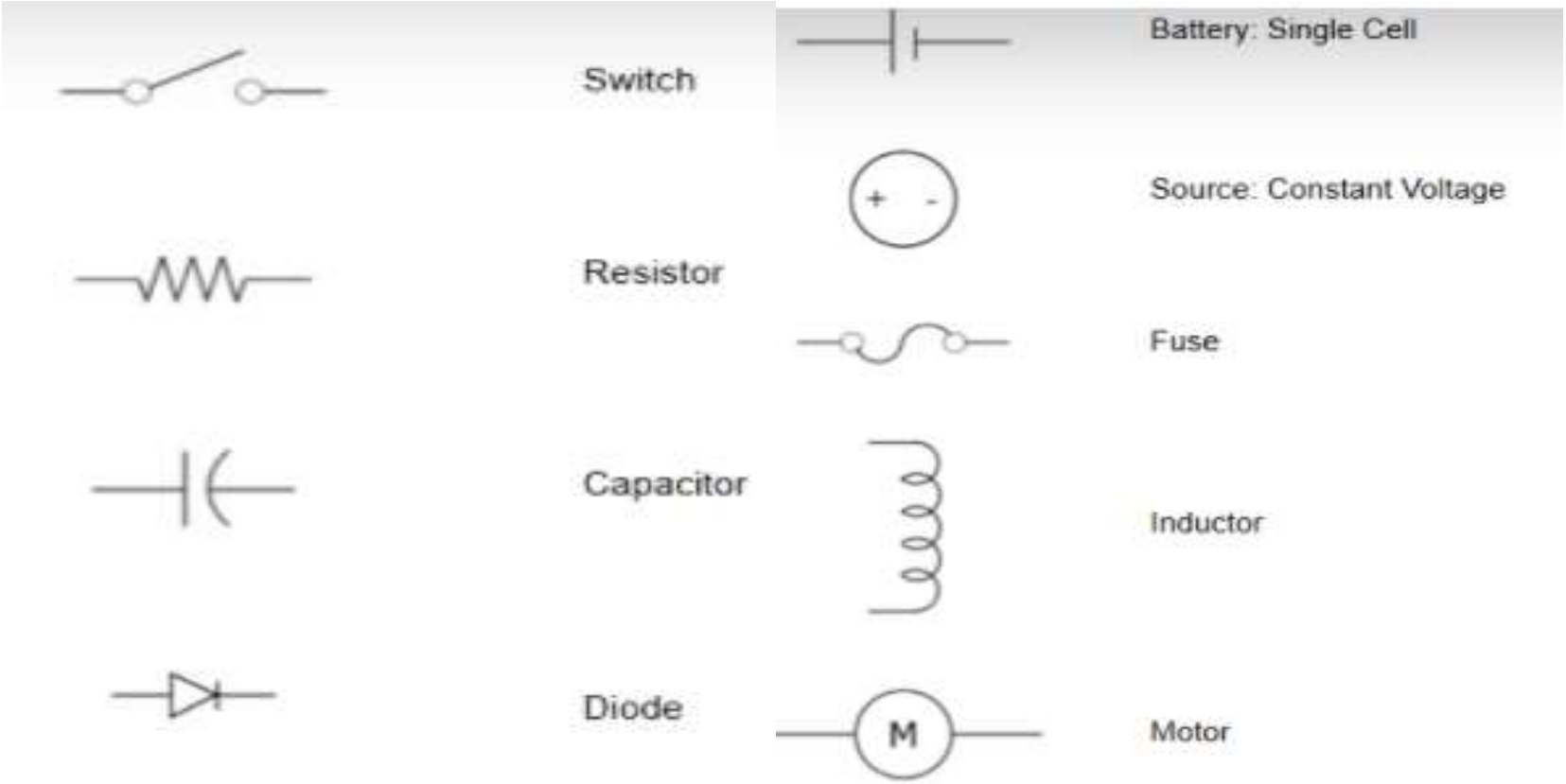

SYMBOLS OF AC AND DC SOURCES

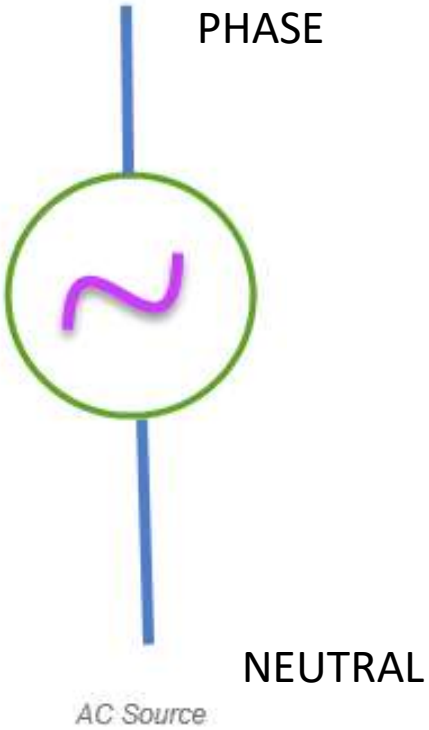

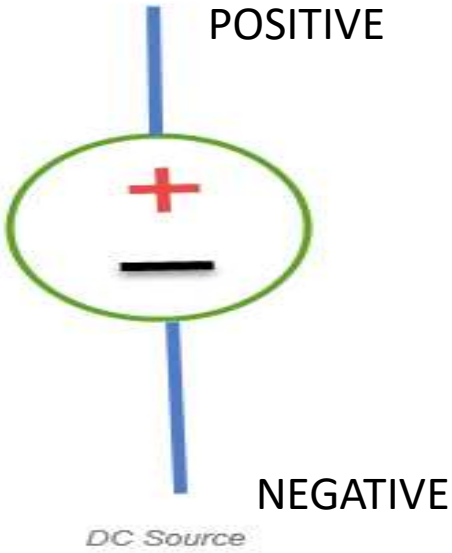

AC vs. DC circuits

- **Direct Current (DC)** is a current that remains constant with time is called DC
- A common source of DC is a battery.
- A current that varies sinusoidally with time is called **Alternating Current (AC)**
- Mains power is an example of AC

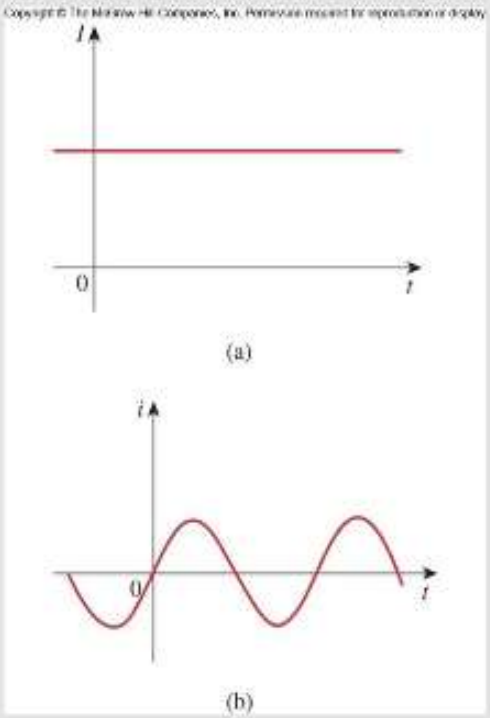

measuring current

Electric current is measured in **amps** (A) using an ammeter connected in series in the circuit.

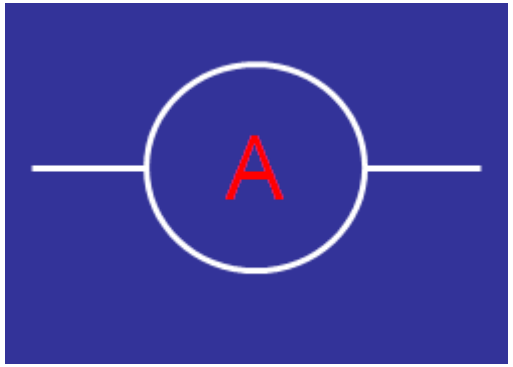

measuring voltage

The 'electrical push' which the cell gives to the current is called the voltage. It is measured in **volts** (V) on a **voltmeter**

Electric Circuits

All circuits need three basic parts: an energy source, wires, and the object that is going to change the electrical energy into another form of energy (load).

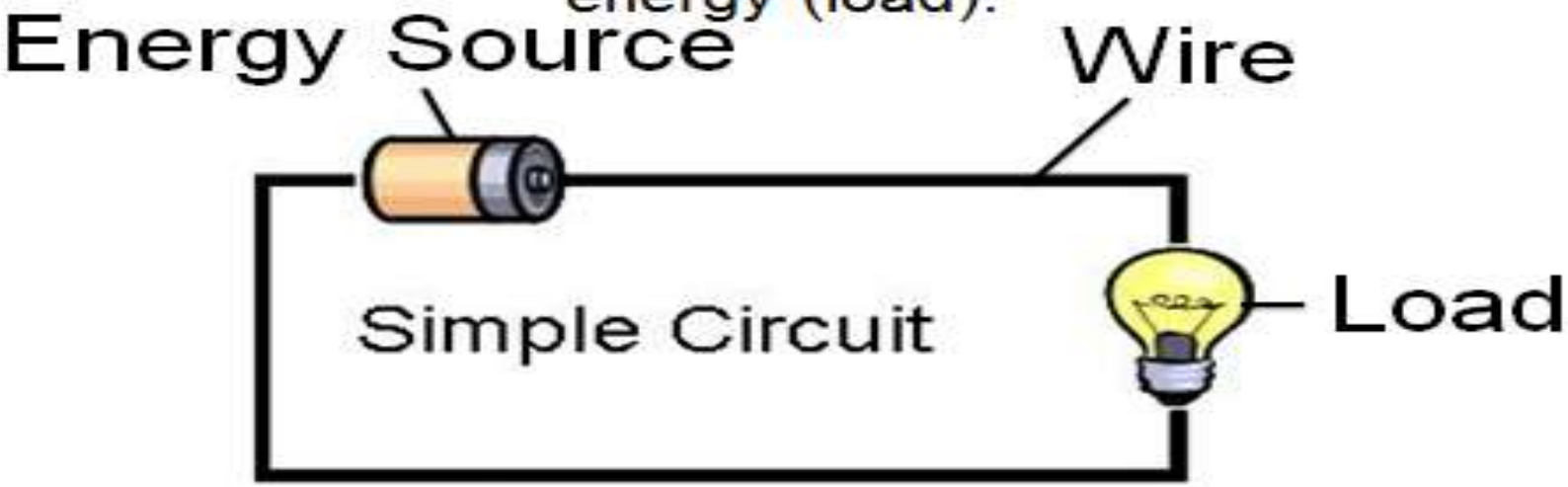

Electric Circuits

OPEN CIRCUIT

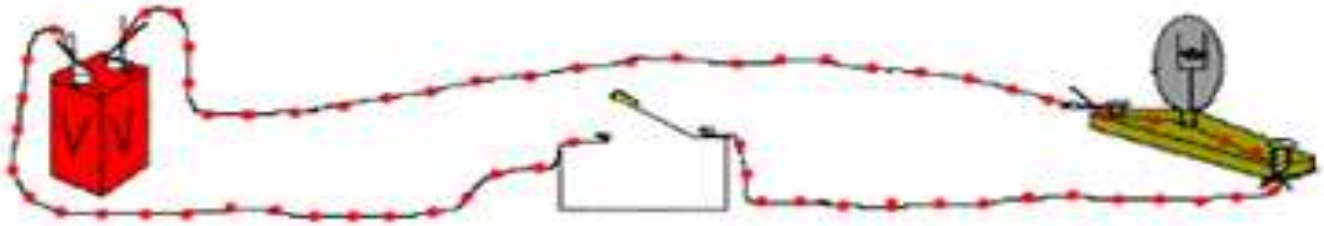

CLOSED CIRCUIT

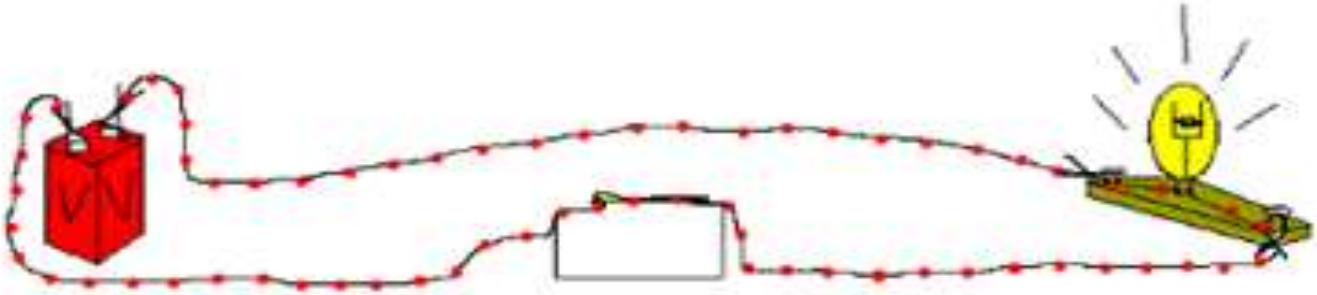

Active Element

- The elements that supply energy to the circuit is called active element.
- Examples of active elements include voltage and current sources, generators, and electronic devices that require power supplies.
- A transistor is an active circuit element, meaning that it can amplify power of a signal.

Passive Element

Definition: The element which receives energy (or absorbs energy) and then either converts it into heat (R) or stored it in an electric (C) or magnetic (L) field is called passive element.

Resistor (R): A resistor opposes the flow of current through it. For a linear circuit, Ohm's law is applicable, which states that voltage across the resistor is directly proportional to the current flowing through it, the proportional constant being the resistance.

The symbols for a resistor:

- It is measured in ohms

Inductor (L): An inductor stores energy in form of the electromagnetic field. The voltage across an inductor is proportional to the rate of change of current flowing through it.

The symbols for a Inductor:

It is measured in Henry

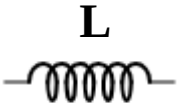

Capacitor (C): A capacitor stores energy in form of the electrostatic field. The voltage across a capacitor is proportional to the charge.

The symbols for a capacitor:

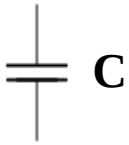

It is measured in Farad

Ohm's Law

Ohm's law is the most important, basic law of electricity. It defines the relationship between the three fundamental electrical quantities:

- current
- voltage
- resistance.

When a voltage is applied to a circuit containing only resistive elements (i.e. no coils), current flows according to Ohm's Law, which is shown below.

Ohm's Law
STATEMENT

“Ohms law states that At constant temperature the current flowing in a conductor is directly proportional to voltage and inversely proportional to the resistance of the circuit.”

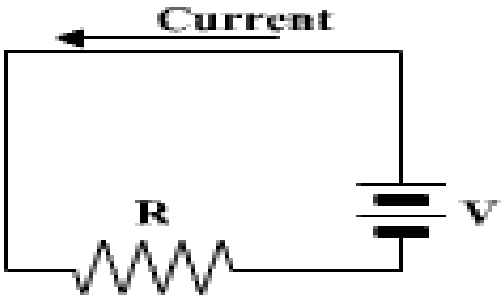

Ohm's Law

Georg Simon Ohm (1787-1854)

$$I = V / R$$

I = Current (Amperes) (amps)

V = Voltage (Volts)

R = Resistance (ohms)

Ohm's Law Triangle

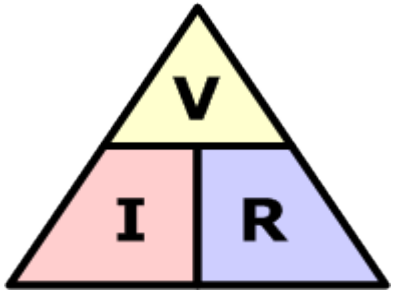

- Transposing the standard Ohms Law equation above will give us the following combinations of the same equation:

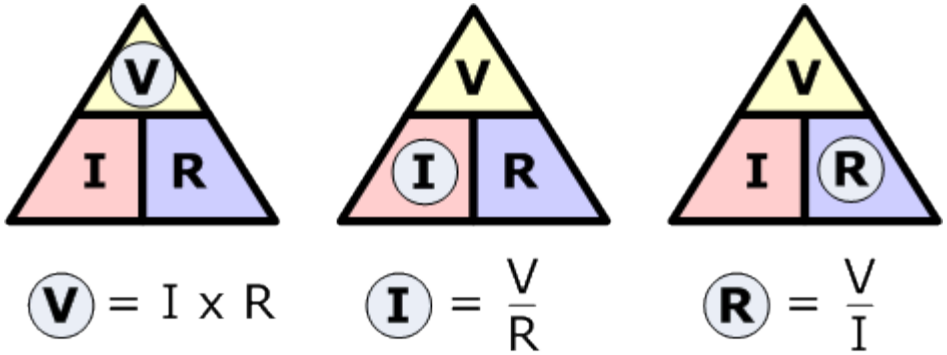

Example 1

1)If the resistance of an electric iron is 50Ω and 3.2A Current flows through the resistance. Find the voltage between two points.

Ans. Given,

Resistance (R) = 50Ω

Current (I) = 3.2A

Therefore, Voltage (V) = I X R

= 3.2A x 50 Ω

v=160V

Example 2

2)If the filament resistance of an electric bulb is 330 Ω and Potential difference of two points 110V. Find the current flowing through the filament.

Ans. Given,

Resistance (R) = 330 Ω

Voltage (V) = 110V

Therefore, Current (I) = V ÷ R

I= 330/110=3A

Series Circuit

- All of the loads in a series circuit share the same current.

- If there is any break in the circuit, the charges will stop flowing.

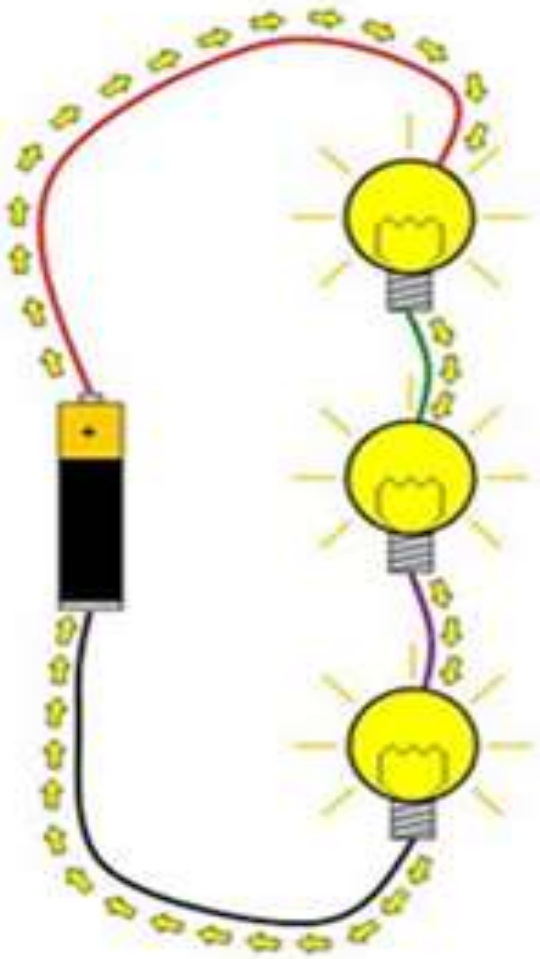

Combination of Resistors

Resistances in series (or) series combination:

The circuit in which resistances are connected end to end so that there is one path for the current flow is called **series circuit**. The voltage source is connected across the free ends A and B.

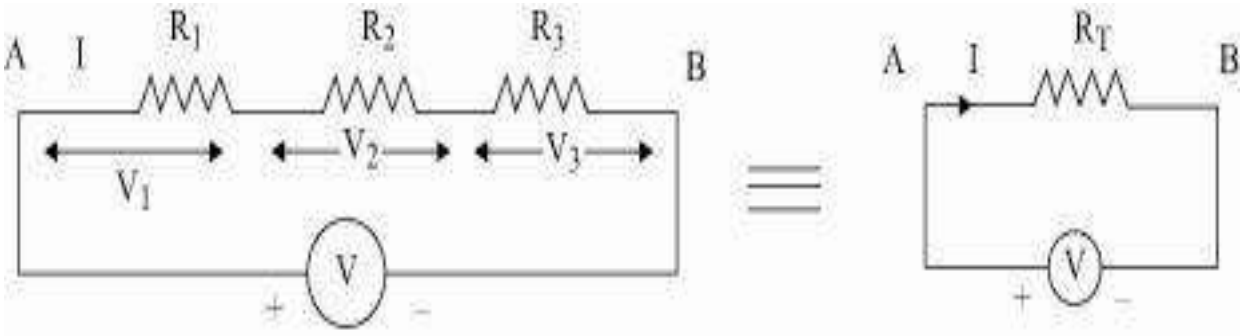

- In the above circuit, there is only one closed path, so only one current flow through all the elements. In other words if the Current is same through all the resistors the combination is called series combination.
- The sum of the voltage drop across each resistor is equal to the applied voltage.

$$V=V_1 + V_2 + V_3$$

Find equivalent Resistance

By ohms law

$V_1 = IR_1$

$V_2 = IR_2$

$V_3 = IR_3$

$V=IR$

$V=IR_1+IR_2+IR_3$

$V = I (R_1+R_2+R_3)$

$IR= I (R_1+R_2+R_3)$

$R_T=R_1+R_2+R_3$

Where R_T is the total(or)equivalent resistance of the circuit.

- Let, V = Applied voltage
- I = Source current = Current through each Element
- $V_{1,}$ V_2, V_3 are the voltage across R_1, R_2 and R_3 respectively.
- Equivalent resistance (R_T) is the sum of all individual resistances.

Parallel Circuit

- The electric current branches so that electrons flow through each of the paths

- If one path is broken, electrons continue to flow to the other paths

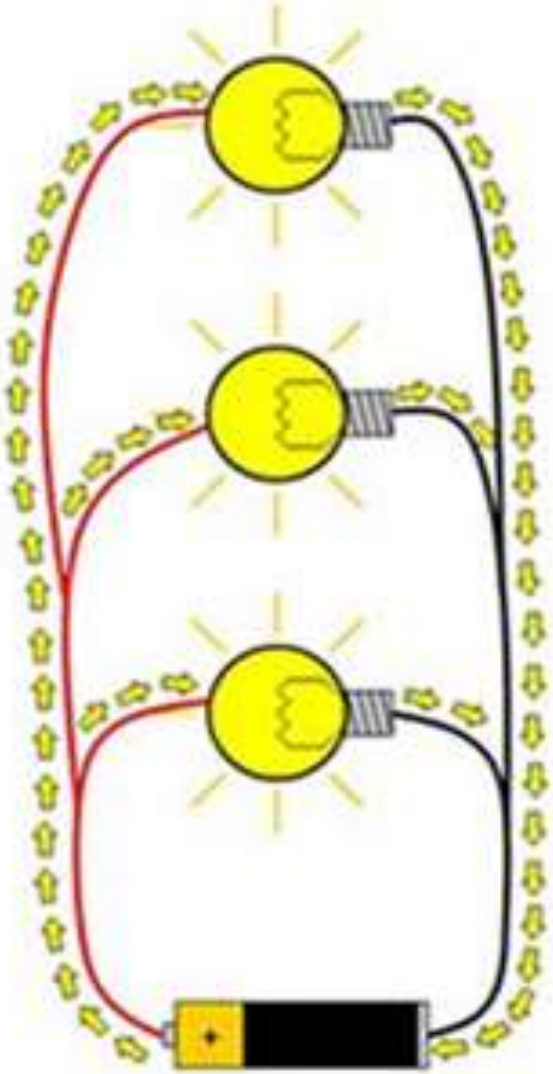

Resistance in Parallel (or) Parallel Combination

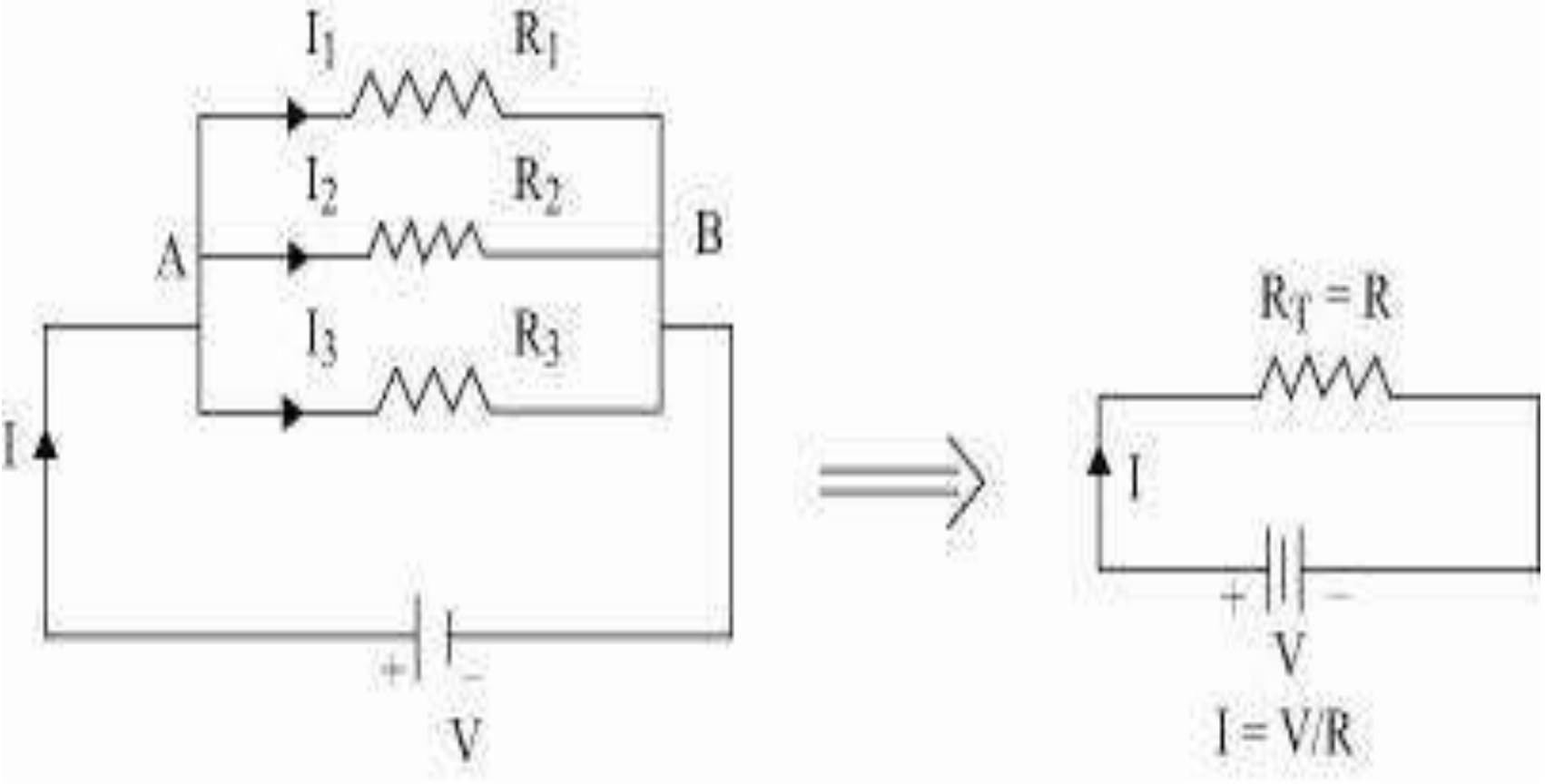

- If one end of all the resistors is joined to a common point and the other ends are joined to another common point, the combination is said to be parallel combination. When the voltage source is applied to the common points, the voltage across each resistor will be same.
- Current in the each resistor is different and given by ohm's law.Let R_1, R_2, R_3 be three resistors connected between the two common terminals A and B, as shown in the Figure.

- Total current in the circuit is the sum of currents flowing through each resistance.

$$I=I_1+I_2+I_3$$

By Ohms Law

$$I_1 = \frac{V}{R_1}$$

$$I_2 = \frac{V}{R_2}$$

$$I_3 = \frac{V}{R_3}$$

$$\mathrm{I}=\frac{V}{R_1}+\frac{V}{R_2}+\frac{V}{R_3}$$

$$\mathrm{I}=V\left(\frac{1}{R_1}+\frac{1}{R_2}+\frac{1}{R_3}\right)$$

$$\frac{I}{V}=\frac{1}{R_1}+\frac{1}{R_2}+\frac{1}{R_3}$$

$$\frac{1}{R_T}=\frac{1}{R_1}+\frac{1}{R_2}+\frac{1}{R_3}$$

Problems on resistor in series and parallel connection

1) Calculate the equivalent resistance of the following combination of resistance and also the source current for the figure.

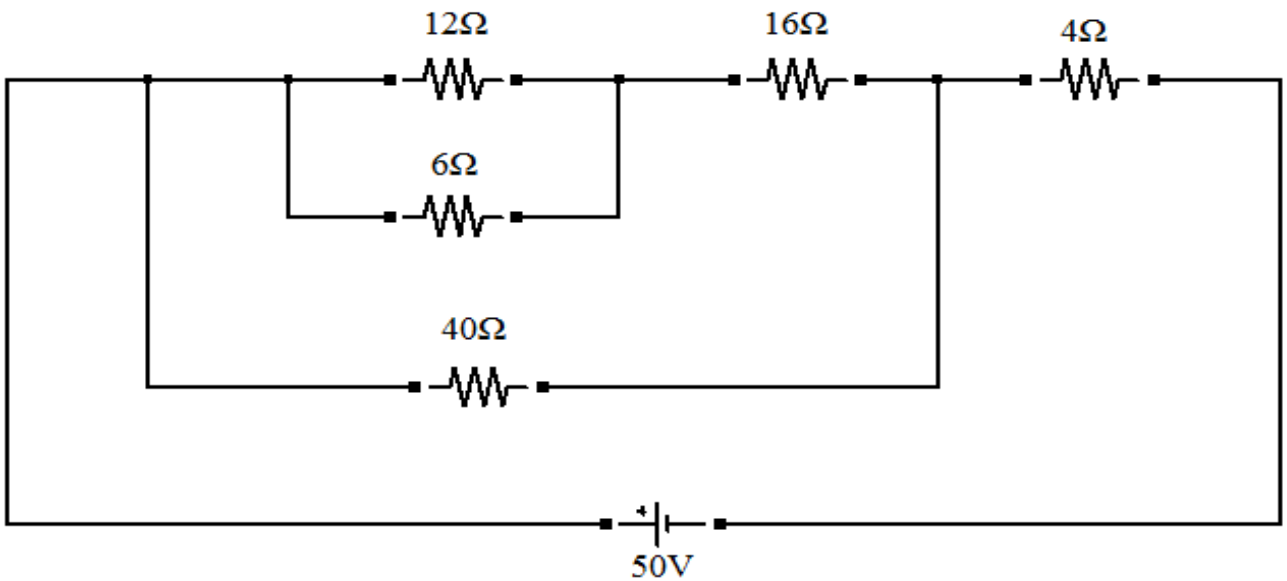

Solution:

12Ω and 6Ω in parallel

R=(R1×R2)/(R1+R2)

$R=\frac{12\times6}{12+6}$

R= 4Ω

Now the Circuit Will Be

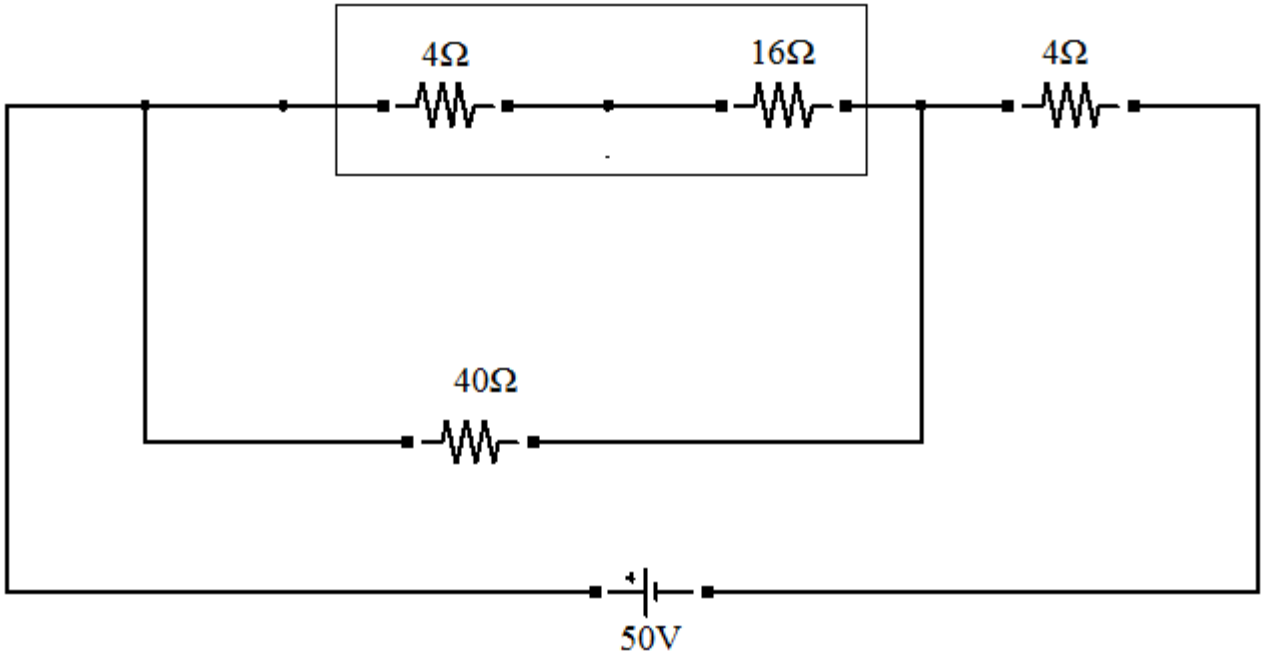

4Ω and 6Ω are connected in series. $R_T = R_1 + R_2$

$= 4 + 16$

$= 20\Omega$

20Ω and 40Ω are connected in series

R=R1×R2/R1+R2

$$R=\frac{20\times40}{20+40}$$

R= 13.33Ω

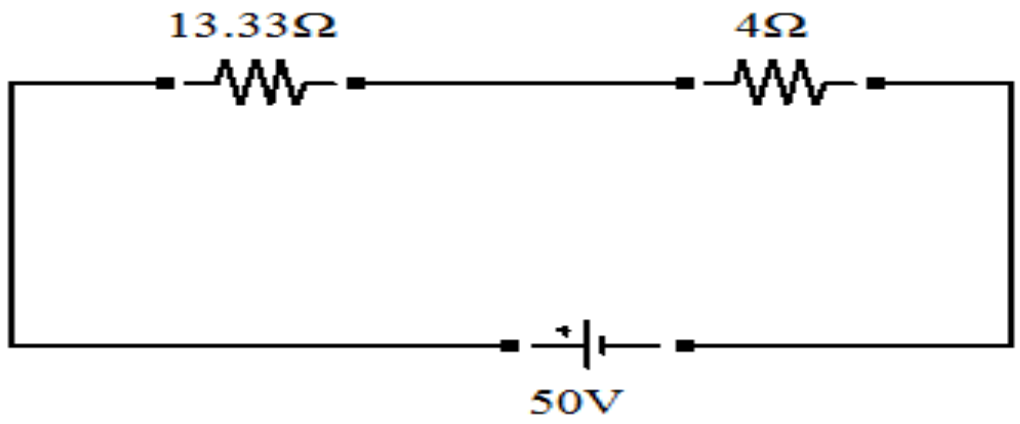

13.33Ω and 4Ω are connected in series

$R_T = R_1 + R_2$

$= 13.33 + 4$

$R_T = 17.33\Omega$

By ohms lawV=IR

Total (or) equivalent resistance $R_T = 17.33\Omega$

Current $I = \frac{V}{R} = \frac{50}{17.33}$

I = 2.88Amps

PROBLEM 2 : All the Resistance in figure are 1Ωeach. Find the value of current from the source

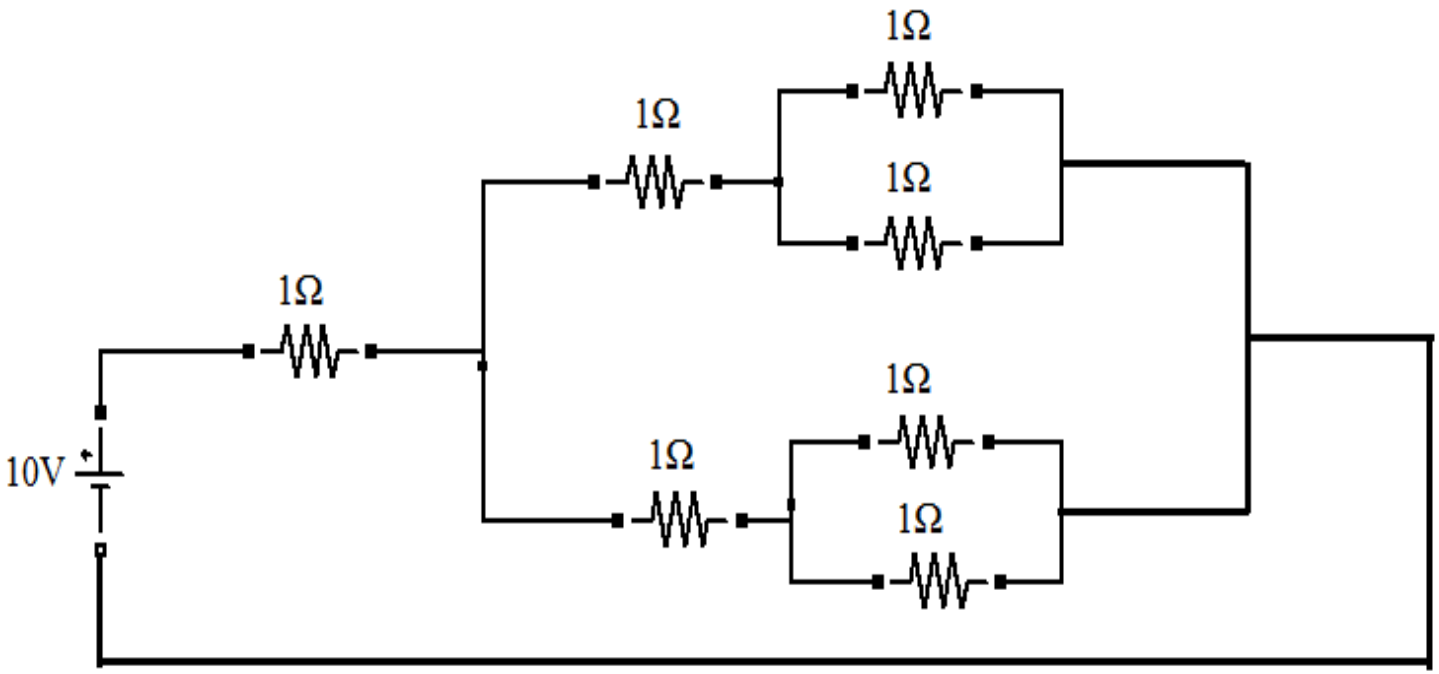

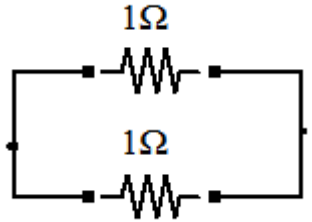

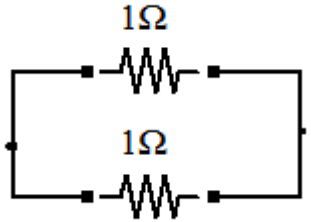

- 1Ω and 1Ω are connected in parallel 1Ω and 1Ω are connected in parallel

R=R1×R2/R1+R2 R=R1×R2/R1+R2

$=\frac{1\times1}{1+1}=0.5\Omega$ $=\frac{1\times1}{1+1}=0.5\Omega$

- The total circuit is simplified into single resistance in series with 10V Source.

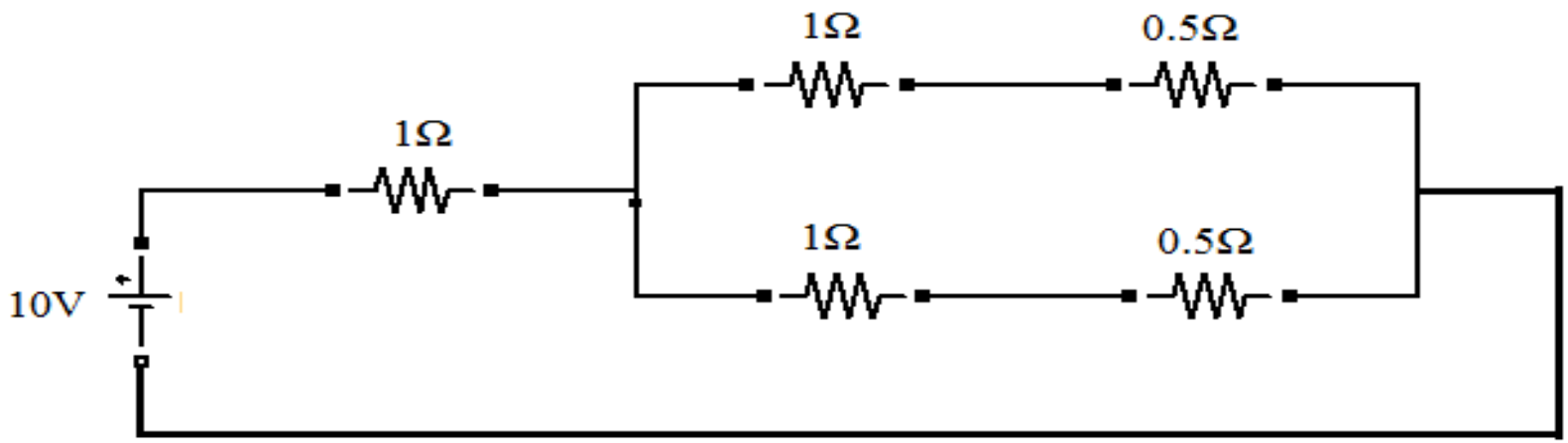

1Ω and 0.5 Ω are connected in Series

- $R_T = R_1 + R_2$

  $= 1 + 0.5$

- $R_T = 1.5\Omega$

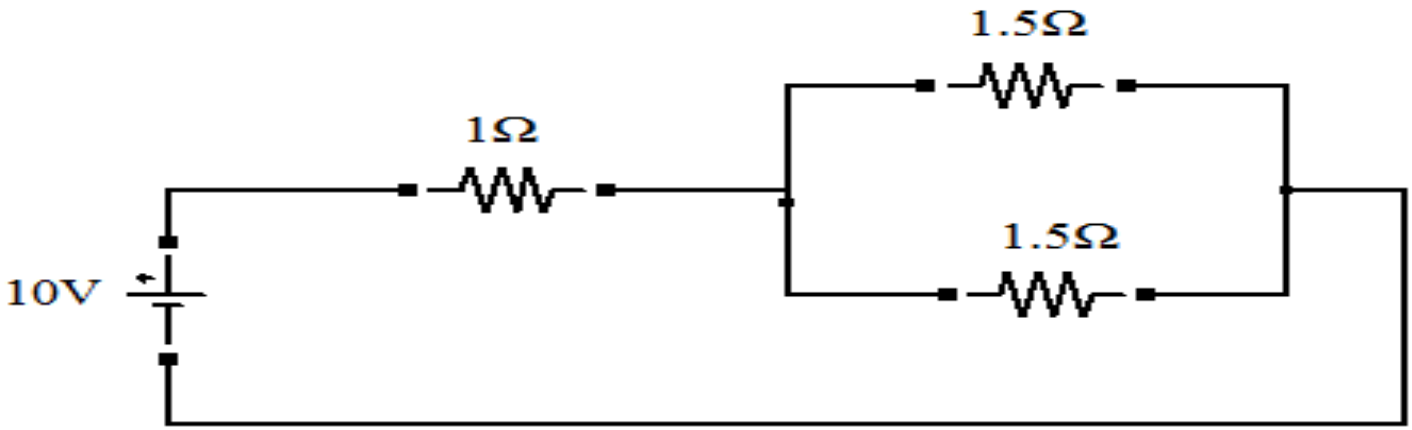

1.5 **Ω** and 1.5 **Ω** are connected in Parallel

$$R=R1\times R2/R1+R2$$

$$=\frac{1.5\times 1.5}{1.5+1.5}$$

$$R= 0.75\Omega$$

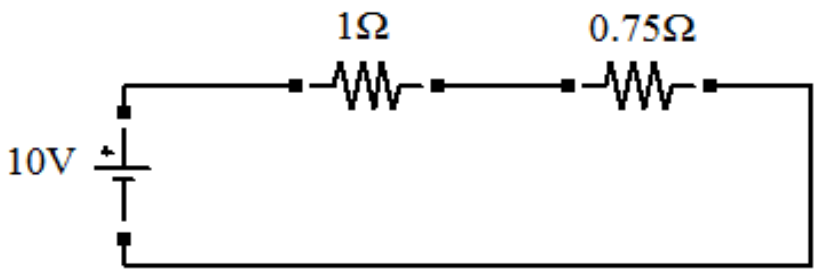

1Ω and 0.75 Ω are connected in Series

$$R_T = R_1 + R_2 = 1 + 0.75 \quad R_T = 1.75\Omega$$

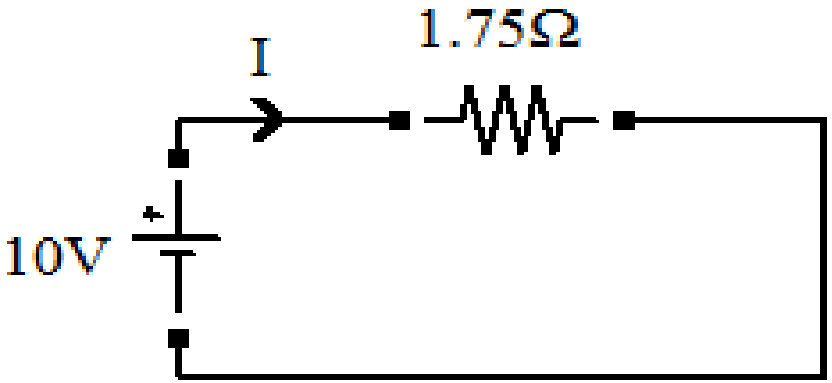

Current I = $\frac{V}{R}$ $= \frac{10}{1.75}$

I = 5.714 Amps

3) Find the resistance between the point A & B in the series parallel network shown in figure.

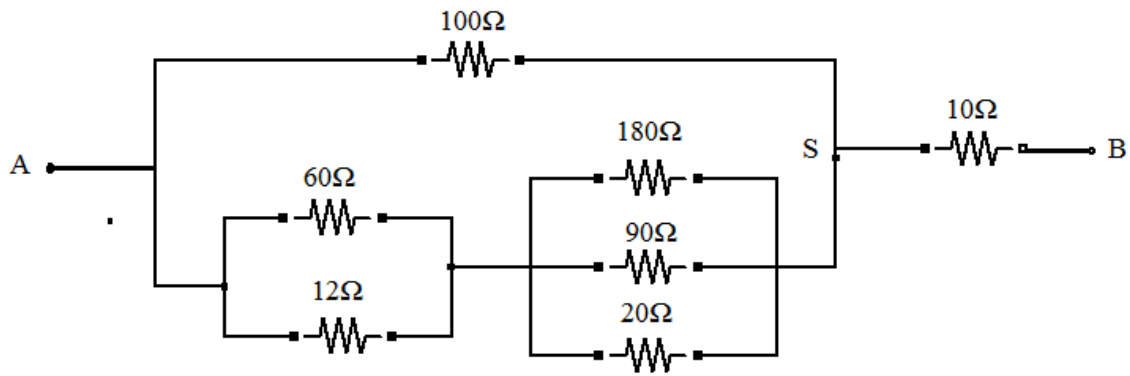

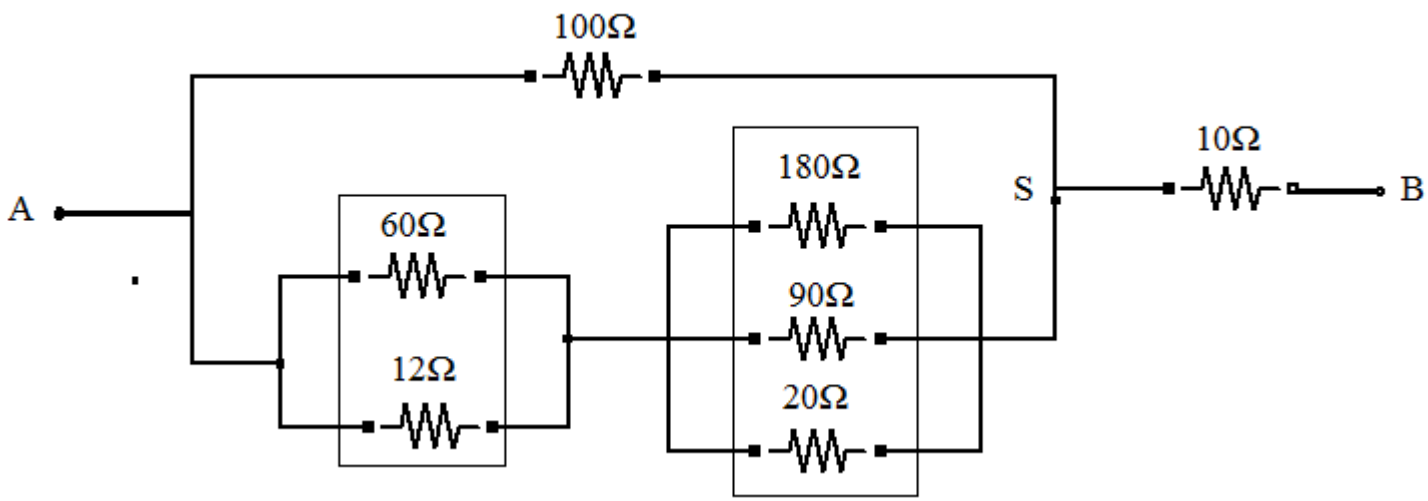

60 Ω and 12 Ω are connected in Parallel

R=R1×R2/R1+R2

$$=\frac{60\times12}{60+12}$$

R= 10Ω

180 Ω, 90Ω and 12 Ω are connected in Parallel

$$\frac{1}{R_T}=\frac{1}{R_1}+\frac{1}{R_2}+\frac{1}{R_3}$$

$$\frac{1}{R_T}=\frac{1}{180}+\frac{1}{90}+\frac{1}{20}$$

$$\frac{1}{R_T}=\frac{1+2+9}{180}$$

$$\frac{1}{R_T}=\frac{12}{180}$$

$$R_T=\frac{180}{12}$$

$$R_T=15\Omega$$

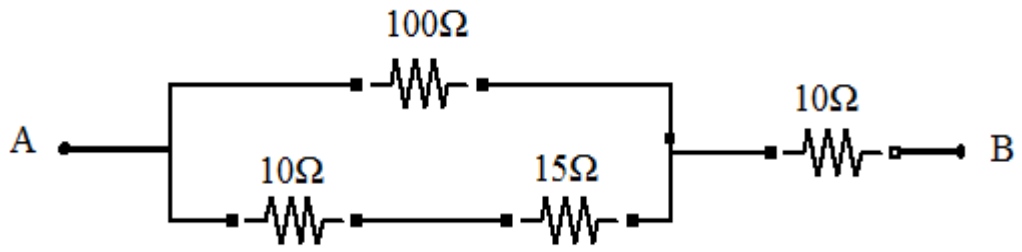

10 Ω and 15Ω are connected in Series

R=10+15

R = 25Ω

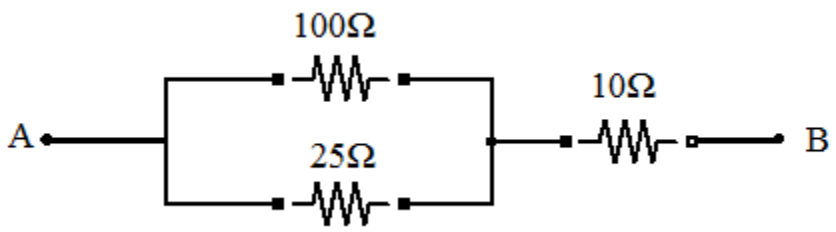

100 Ω and 25 Ω are connected in Parallel

R=R1×R2/R1+R2

$$R=\frac{100\times25}{100+25}$$

R= 20Ω

Now the circuit will be

Resistance between points A & B

$R_{AB} = 20+10$

$R_{AB} = 30\Omega$

Source transformation

Statement: The voltage and current sources may be interchanged without affecting the remainder of the circuit this technique is called as sourced transformation.

Types:

Current to voltage source

Voltage to current source

Conversion of Voltage Source to Current Source

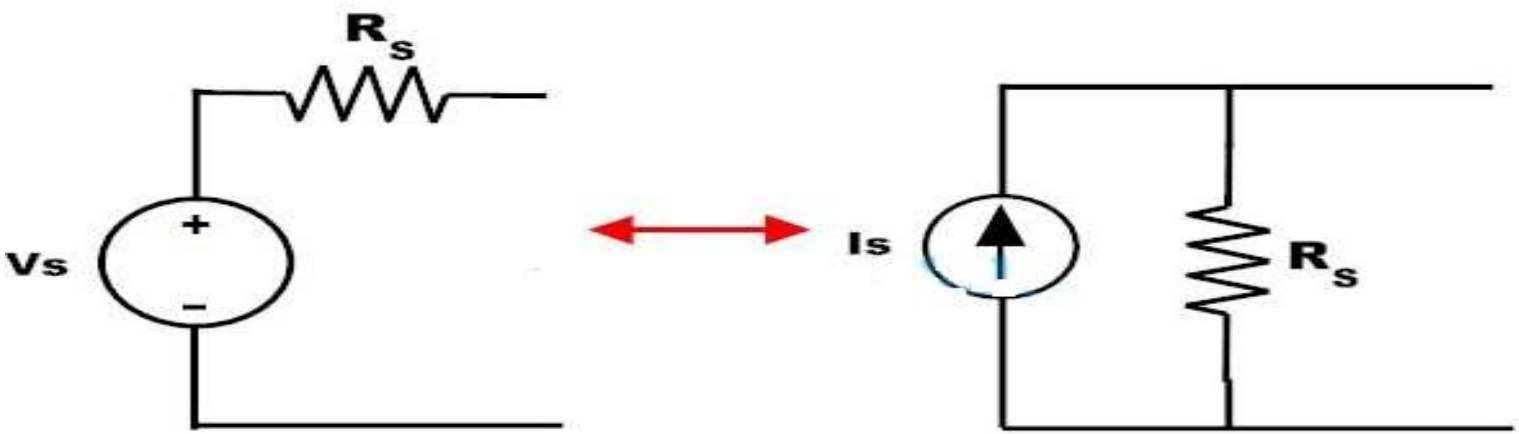

$V_s = R_s \times I_s$ $\qquad$ $I_s = \frac{V_s}{R_s}$

Steps:

- Find the internal resistance of the voltage source and keep this resistor in parallel with a current source.
- Determine the current flow provided by current source by applying ohms law.

Conversion of Current Source to Voltage Source

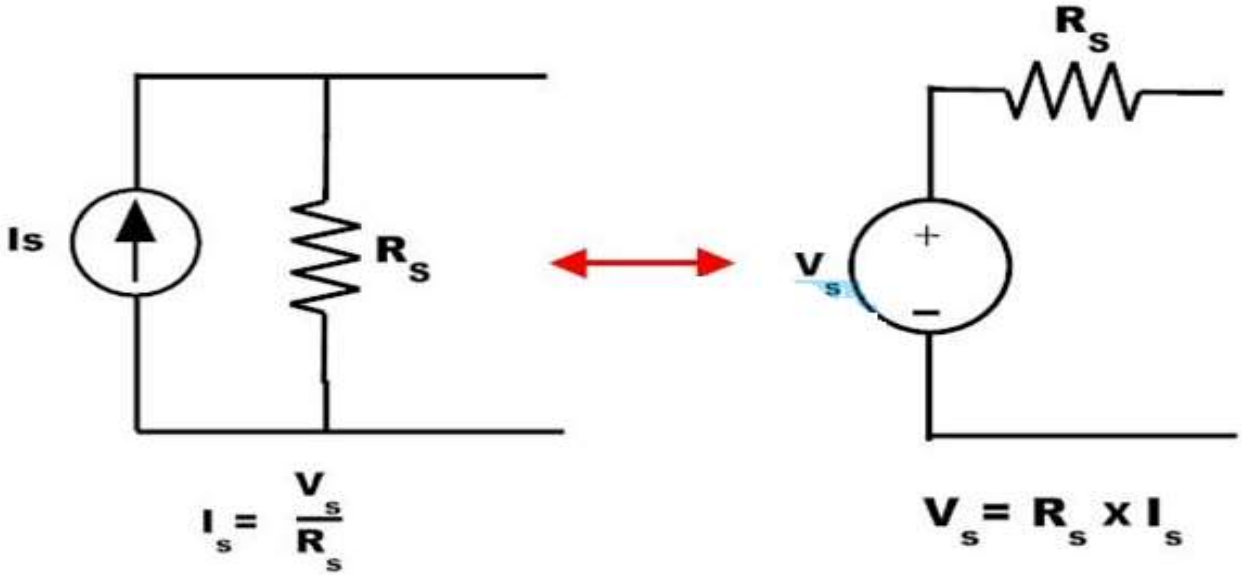

Steps:

- Find the parallel resistance of the constant current source and place in series with a voltage source.
- Determine the open circuit voltage value of the voltage source by applying ohms law.

Kirchhoff's Current Law

- KCL, states that the "total current or charge entering a junction or node is exactly equal to the charge leaving the node.(OR)
- sum of ALL the currents entering and leaving a node must be equal to zero. $I_{(exiting)} + I_{(entering)} = 0$.

Currents Entering the Node
Equals
Currents Leaving the Node

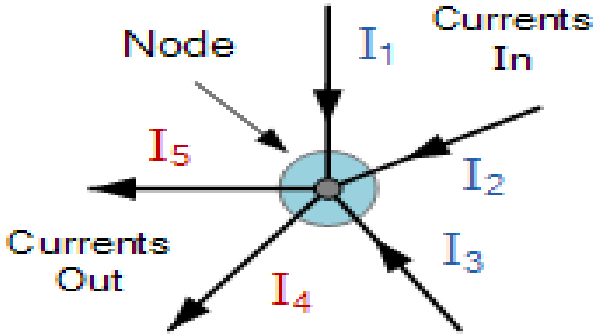

$$I_1 + I_2 + I_3 + (-I_4 + -I_5) = 0$$

Kirchhoff's Second Law – the Voltage Law, (KVL)

The algebraic sum of all voltages within the loop must be equal to zero.

The sum of all the Voltage Drops around the loop is equal to Zero

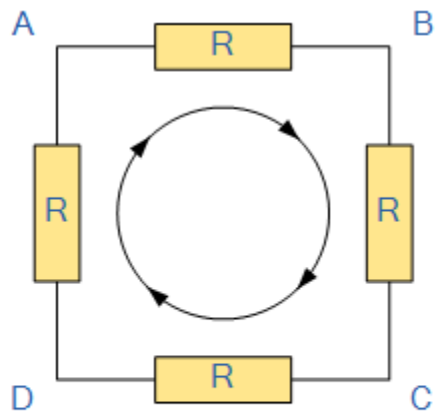

$V_{AB} + V_{BC} + V_{CD} + V_{DA} = 0$

METHODS TO SOLVE KVL AND KCL PROBLEMS

- The kirchhoff’s current law should be solved by NODAL VOLTAGE METHOD.
- The kirchhoff’s voltage law should be solved by MESH CURRENT METHOD

PROBLEMS ON KCL

Steps of Nodal Analysis

1. Choose a reference (ground) node.
2. Assign node voltages to the other nodes.
3. Apply KCL to each node other than the reference node; express currents in terms of node voltages.
4. Solve the resulting system of linear equations for the nodal voltages.

SELECTION OF REFERENCE NODE

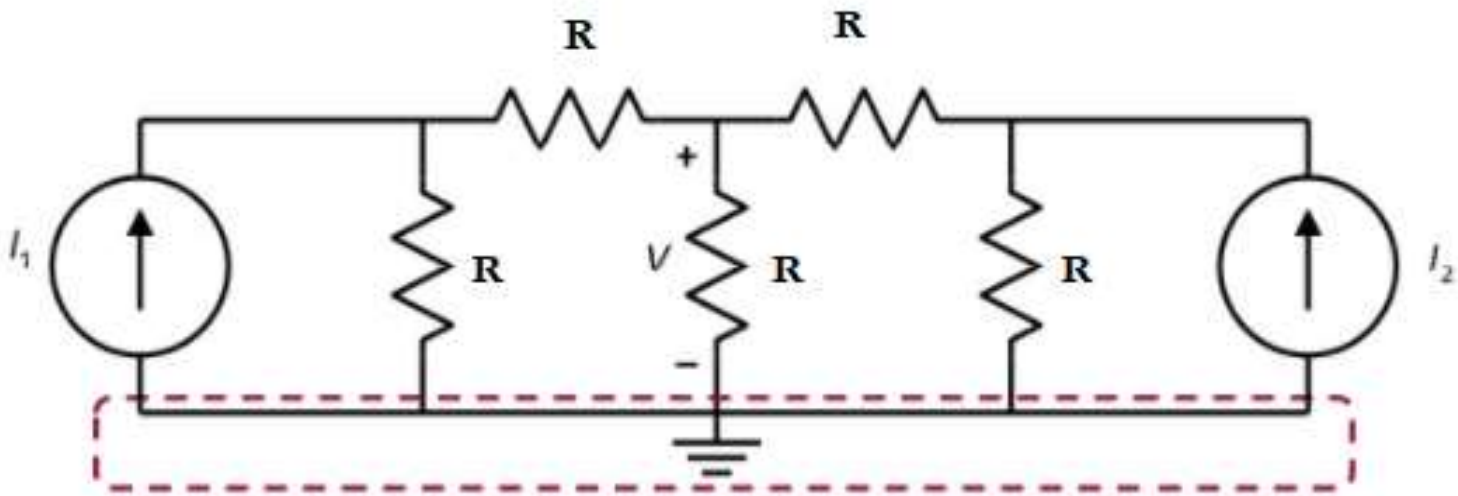

The reference node is called the *ground* node where $V = 0$

PROBLEMS ON KCL

- Apply KCL to find the voltages V_1 & V_2 for the figure.

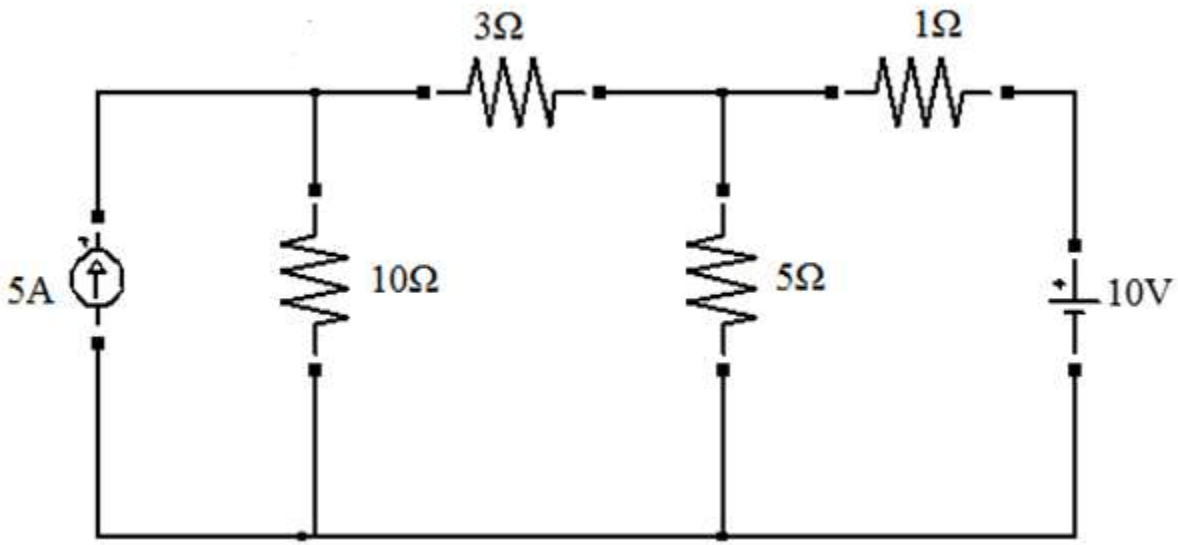

NODAL VOLTAGE ANALYSIS

- node is a junction point
- Select nodes 1,2&3
- 3 node is reference node(grounded)
- Reference voltage=0V

Consider,

Node 1 voltage is V_1

Node 1 voltage is V_2

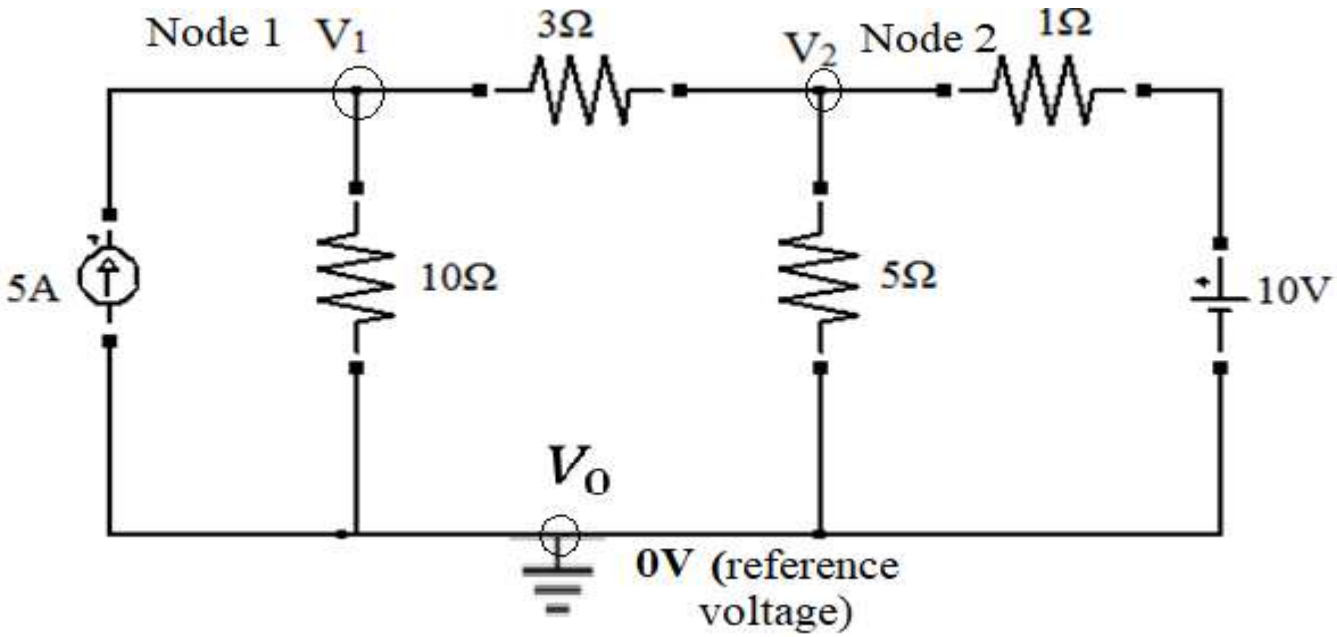

Apply Kirchoff's current law in node1

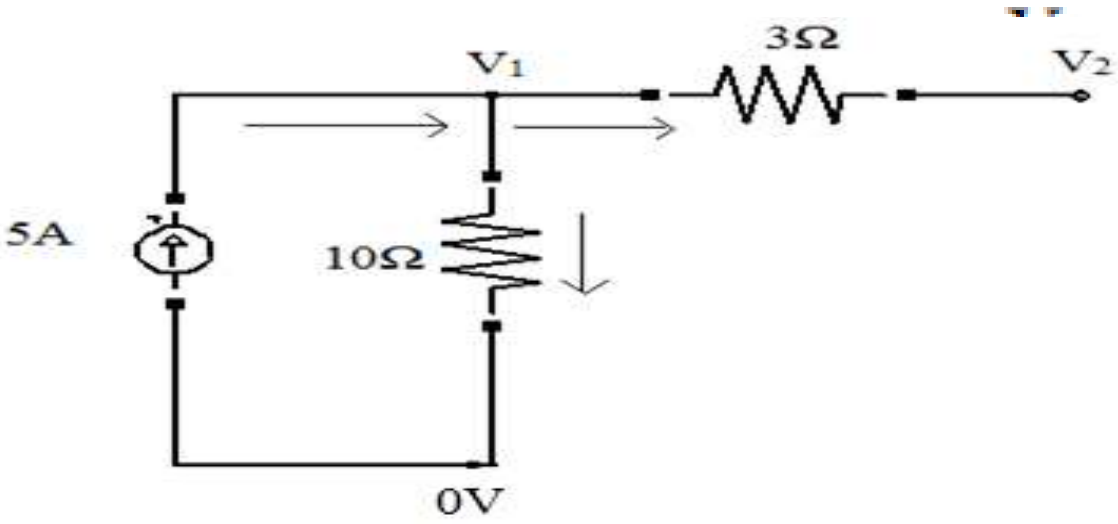

Sum of Entering current = sum of leaving current

$$5=\frac{V_1-0}{10}+\frac{V_1-V_2}{3}$$

$$5=\frac{3V_1+10\,(V_1-V_2)}{30}$$

$$5=\frac{3V_1+10\,V_1-10\,V_2)}{30}$$

$$5\times30=3V_1+10\,V_1-10\,V_2$$

$$13V_1-10\,V_2=150$$

Apply Kirchoff's current law in node 2

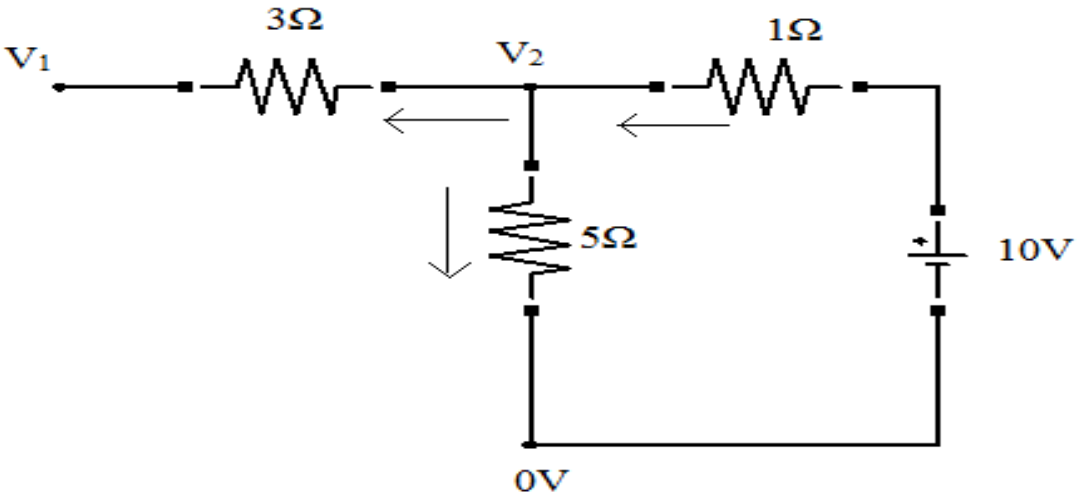

$$0=\frac{V_2-V_1}{3}+\frac{V_2-10}{1}+\frac{V_2-0}{5}$$

$$0=\frac{V_2-V_1}{3}+\frac{V_2-10}{1}+\frac{V_2}{5}$$

$$0=\frac{5(V_2-V_1)+15(V_2-10)+V_2(3)}{15}$$

$$0\times 15 = 5V_2-5V_1+15V_2-150+3V_2$$

$$0= 8V_2-5V_1+15V_2-150$$

$$-5V_1+23V_2=150$$

Solve equation 1 &2 findV_1&V_2

$$\begin{bmatrix} 13 & -10 \\ -5 & 23 \end{bmatrix} \begin{bmatrix} V_1 \\ V_2 \end{bmatrix} = \begin{bmatrix} 150 \\ 150 \end{bmatrix}$$

By Cramer's rule

$$\Delta = \begin{bmatrix} 13 & -10 \\ -5 & 23 \end{bmatrix}$$

Δ = 299-50 =249

Δ = 249

$$\Delta V_1 = \begin{bmatrix} 150 & -10 \\ 150 & 23 \end{bmatrix}$$

= 3450+1500

ΔV_1 = 4950

$$\Delta V_2 = \begin{bmatrix} 13 & 150 \\ -5 & 150 \end{bmatrix}$$

$$= 1950 + 750$$

$$\Delta V_2 = 2700$$

$$V_1 = \frac{\Delta V_1}{\Delta}$$

$$= \frac{4950}{249} = 19.8V$$

$$V_2 = \frac{\Delta V_2}{\Delta}$$

$$= \frac{2700}{249} = 10.84V$$

$V_1 = 19.87V$

$V_2 = 10.84V$

PROBLEM 2

Find the current through 12Ω resistor in figure.

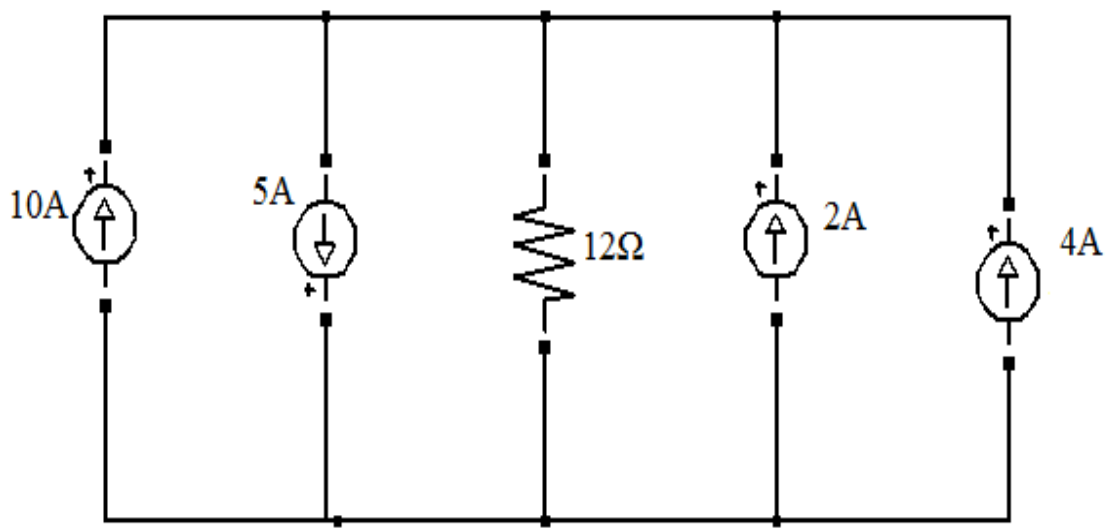

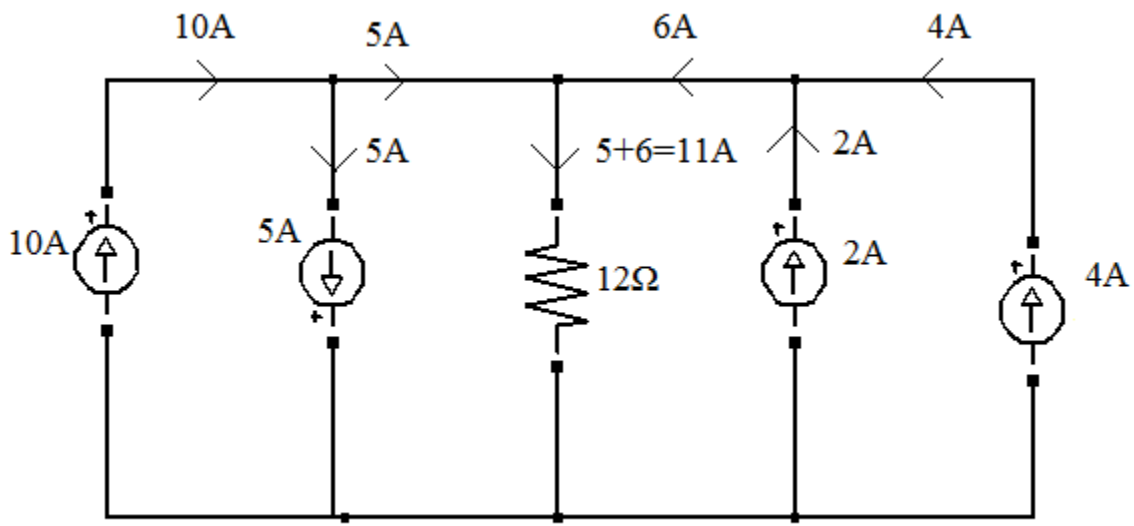

Incoming Current at 12Ω resistor is 5+6 = 11A

Current through 12Ω resistor = 11A

Potential Drop

In a battery source , the current enters through the positive terminal and leaves through the negative terminal of the battery , then it’s a potential drop.

Potential Rise

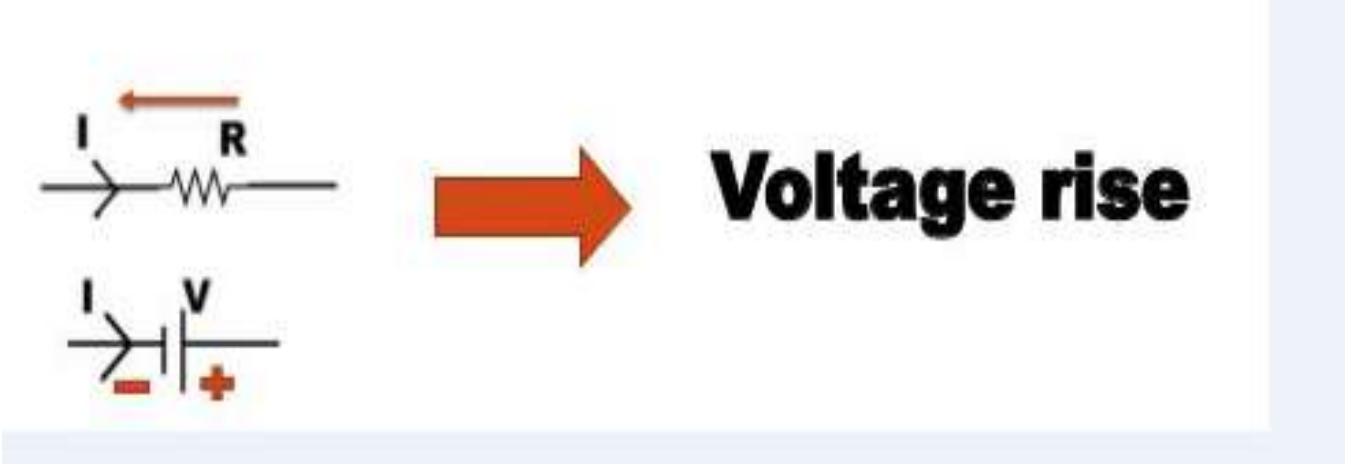

Battery

In a battery source , the current enters through the negative terminal and leaves through the positive terminal of the battery , then it’s a potential rise.

PROBLEMS ON KVL
MESH CURRENT METHOD

- Identify the mesh or loops in the given circuit and name the meshes with numbers.
- Assume the currents directions in the loops.
- Apply KVL inside each mesh or loops.

$$\sum V=0, \text{ Inside a closed loop,}$$

Sum of Potential drop = Sum of potential rise

MESH CURRENT METHOD

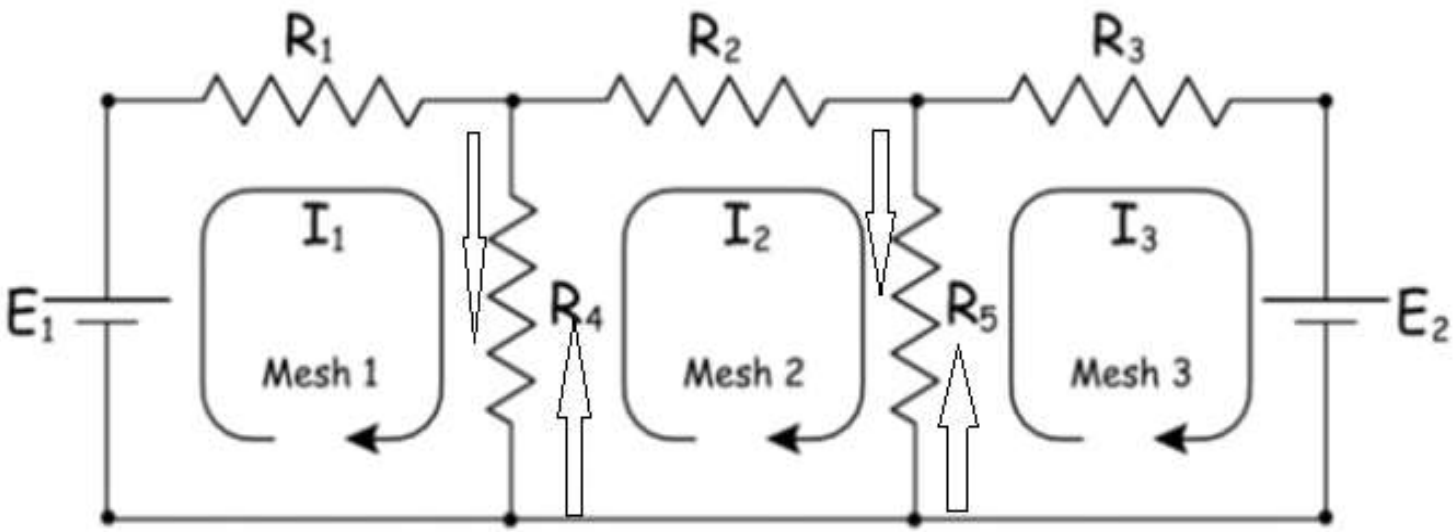

- If the assumed current direction between mesh 1 and mesh are same then, the current through R_4 will be $I_1 - I_2$, I2 – I3

MESH CURRENT METHOD

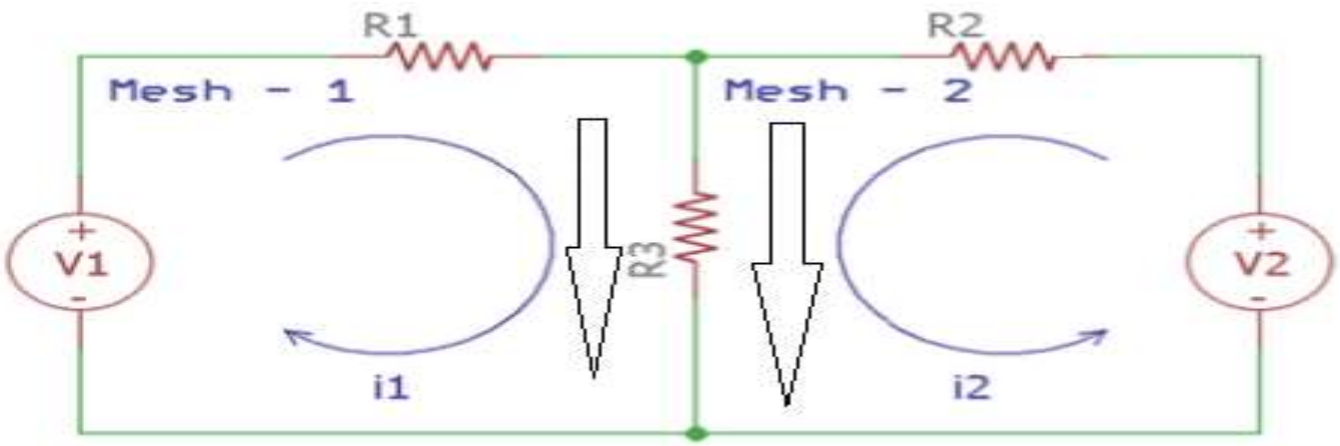

If the assumed current direction between mesh 1 and mesh 2 are different then, the current through R_3 will be $I_1 + I_2$

PROBLEM 1

- Calculate Current through 6Ω Resistor by KVL for figure.

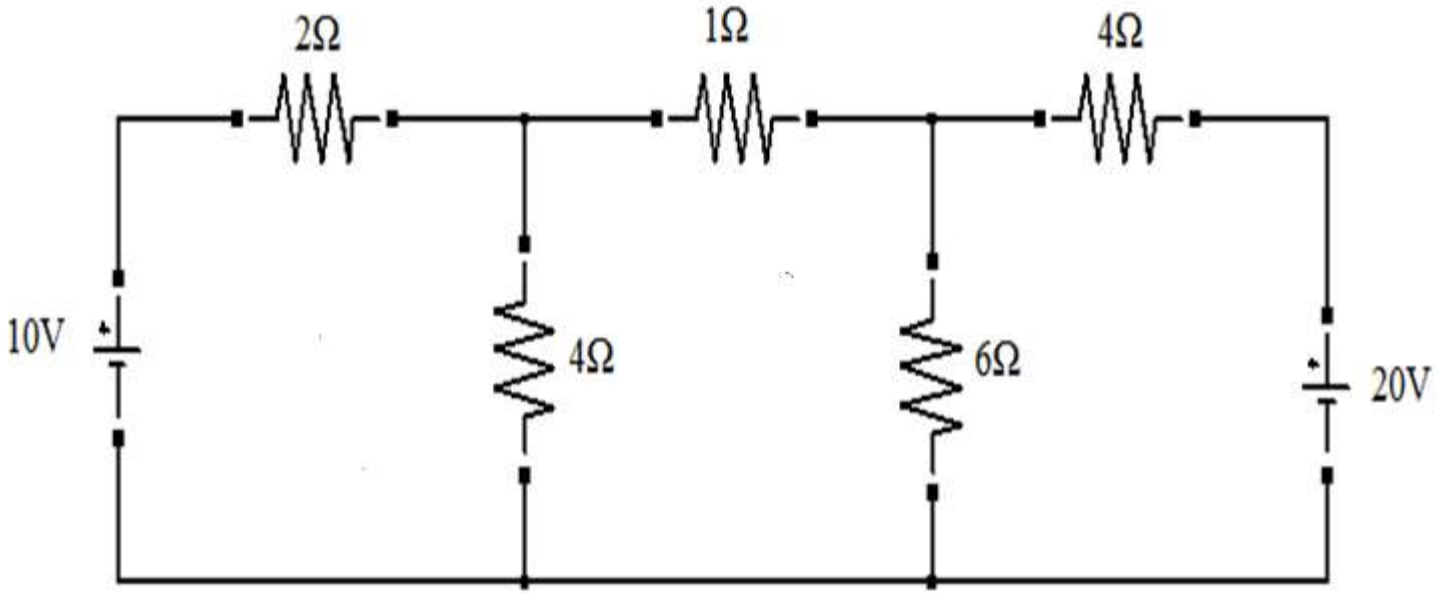

Solution:

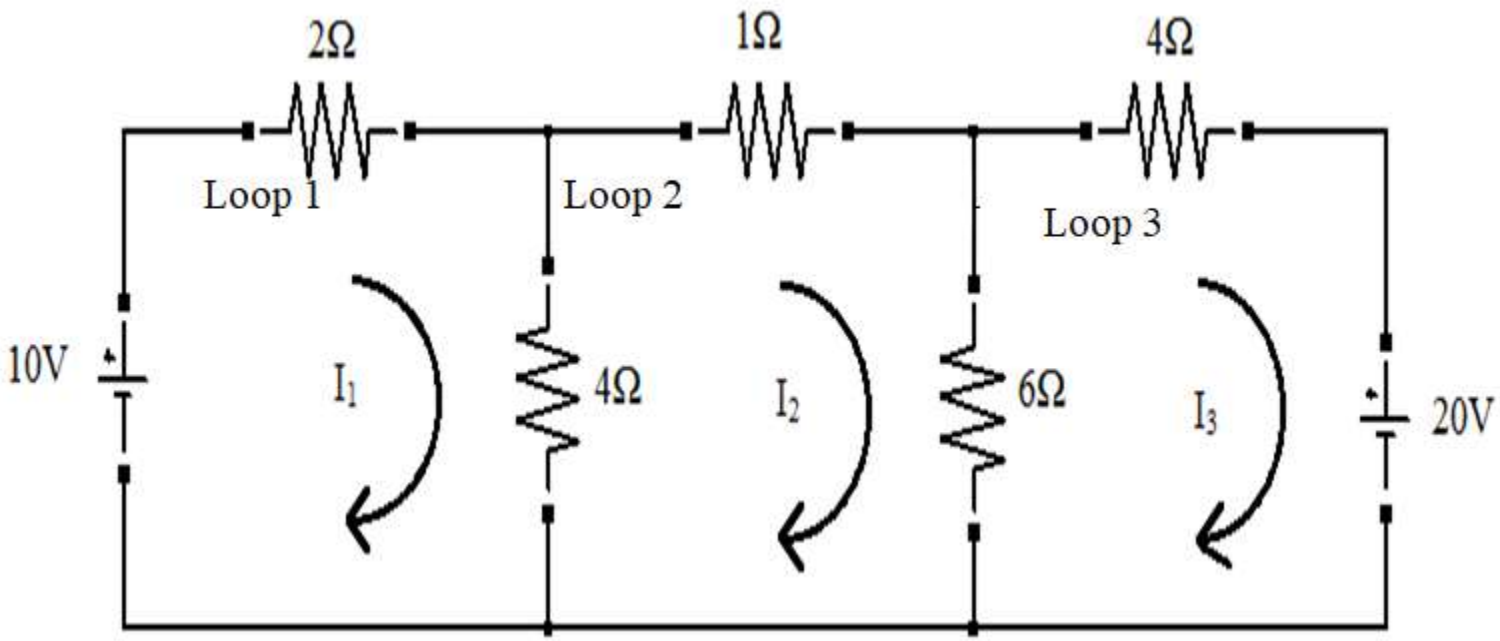

We have three loops in the circuit. We have assumed three loop currents for three loops as I_1 , I_2 , I_3 respectively . All the loop currents are assumed to be in same directions.

Apply KVL at Loop1

i) $\sum V=0$

$$-2I_1 -4(I_1-I_2) +10=0$$

$$-2I_1 -4I_1+4I_2 +10=0$$

$$-6I_1 +4I_2 +10=0$$

$$6I_1 -4I_2=10$$

(Or)

ii) Potential drop = potential rise

$$2I_1 +4(I_1-I_2) = 10$$

$$2I_1 +4I_1-4I_2 = 10$$

$$6I_1-4I_2 = 10 \longrightarrow (1)$$

Apply KVL at loop2

$$1I_2 + 6(I_2 - I_3) + 4(I_2 - I_1) = 0$$

$$I_2 + 6I_2 - 6I_3 + 4I_2 - 4I_1 = 0$$

$$-4I_1 + 11I_2 - 6I_3 = 0 \longrightarrow (2)$$

Apply KVL at loop3

$$4I_3 + 6(I_3 - I_2) = -20$$

$$4I_3 + 6I_3 - 6I_2 = -20$$

$$-6I_2 + 10I_3 = -20 \longrightarrow (3)$$

Solve equation 1,2&3 we get I_1, I_2 & I_3

$$\begin{bmatrix} 6 & -4 & 0 \\ -4 & 11 & -6 \\ 0 & -6 & 10 \end{bmatrix} \begin{bmatrix} I_1 \\ I_2 \\ I_3 \end{bmatrix} = \begin{bmatrix} 10 \\ 0 \\ -20 \end{bmatrix}$$

Current through 6Ω Resistor = $I_3 - I_2$

Find I_2 & I_3

$$\Delta = \begin{bmatrix} 6 & -4 & 0 \\ -4 & 11 & -6 \\ 0 & -6 & 10 \end{bmatrix}$$

$$\Delta = 6(110-36) + 4(-40+0) + 0$$

$$= 444-160$$

$$\Delta = 284$$

$$\Delta I_2 = \begin{bmatrix} 6 & 10 & 0 \\ -4 & 0 & -6 \\ 0 & -20 & 10 \end{bmatrix}$$

$$= 6(0-120) - 10(-40+0) + 0$$

$$= -720+400$$

$$\Delta I_2 = -320$$

$$\Delta I_3 = \begin{bmatrix} 6 & -4 & 10 \\ -4 & 11 & -0 \\ 0 & -6 & -20 \end{bmatrix}$$

$$= 6(-220+0)+4(-80-0)+10(24-0)$$

$$= -1320+320+240$$

$$\Delta I_3 = -760$$

$$I_2 = \frac{\Delta I_2}{\Delta}$$

$$= \frac{-320}{284}$$

$$I_2 = -1.1267 \text{ Amps}$$

$$I_3 = \frac{\Delta I_3}{\Delta}$$

$$= \frac{-760}{284}$$

$$I_2 = -2.676 \text{ Amps}$$

Current through 6Ω Resistor $= I_2 - I_3$

$$= -1.1267+2.676$$

$$I_{6\Omega} = 1.549 \text{Amps}$$

Determine the current in the 4Ω branch in the circuit shown in figure.

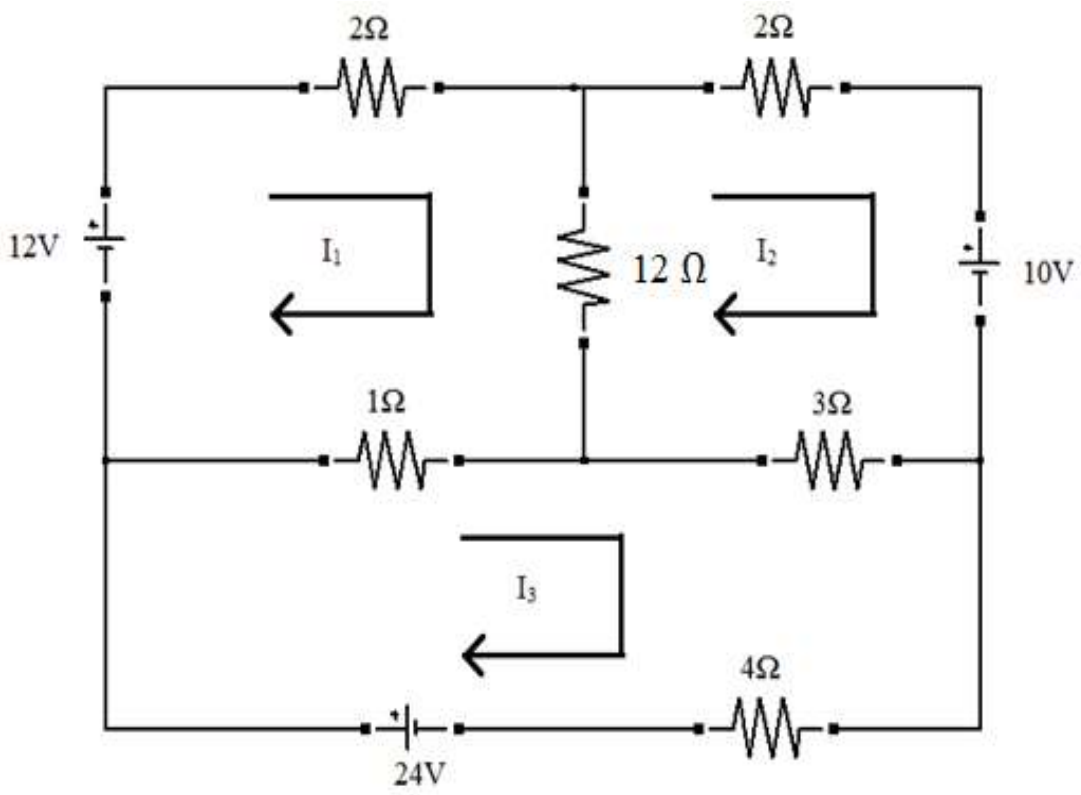

Apply KVL at loop 1

$2I_{1+}12(I_1-I_2) +1(I_1-I_3)=12$
$2I_{1+}12I_1-12I_2+I_1-I_3=12$
$15I_1-12I_2-I_3=12$ ----------(1)

Apply KVL at loop 2

$2I_{2+}3(I_2-I_3) +12(I_2-I_1)= -10$
$2I_{2+}3I_2-3I_3 +12I_2-12I_1= -10$
$-12I_1+17I_2-3I_3 = -10$ ----------(2)

Apply KVL at loop 3

$1(I_3-I_1) +3(I_3-I_2) + 4I_3= 24$
$I_3-I_1+3I_3-3I_2 + 4I_3= 24$
$-I_1-3I_2 + 8I_3= 24$ ----------(3)

From equation 1, 2&3 we get matrix form,

$$\begin{bmatrix} 15 & -12 & -1 \\ -12 & 17 & -3 \\ -1 & -3 & 8 \end{bmatrix} \begin{bmatrix} I_1 \\ I_2 \\ I_3 \end{bmatrix} = \begin{bmatrix} 12 \\ -10 \\ 24 \end{bmatrix}$$

Current through 4Ω Resistor = I_3

Find I_3 by using Cramer's rule

$$\Delta = \begin{bmatrix} 15 & -12 & -1 \\ -12 & 17 & -3 \\ -1 & -3 & 8 \end{bmatrix}$$

Δ =15(136-9) +12(-96-3)-1(36+17)
= 1905-1188-53

Δ = 664

$$\Delta I_3 = \begin{bmatrix} 15 & -12 & -12 \\ -12 & 17 & -10 \\ -1 & -3 & 24 \end{bmatrix}$$

= 15(408-30) +12(-288-10) +12(36+17)

= 5670-3576+636

ΔI_3 = 2730

$I_3 = \frac{\Delta I_3}{\Delta}$

$= \frac{2730}{664}$

I_3 = 4.11 Amps

NODAL VOLTAGE METHOD USING SOURCE TRANSFORMATION

- Using nodal method find current through 8Ω resistor of in the given figure.

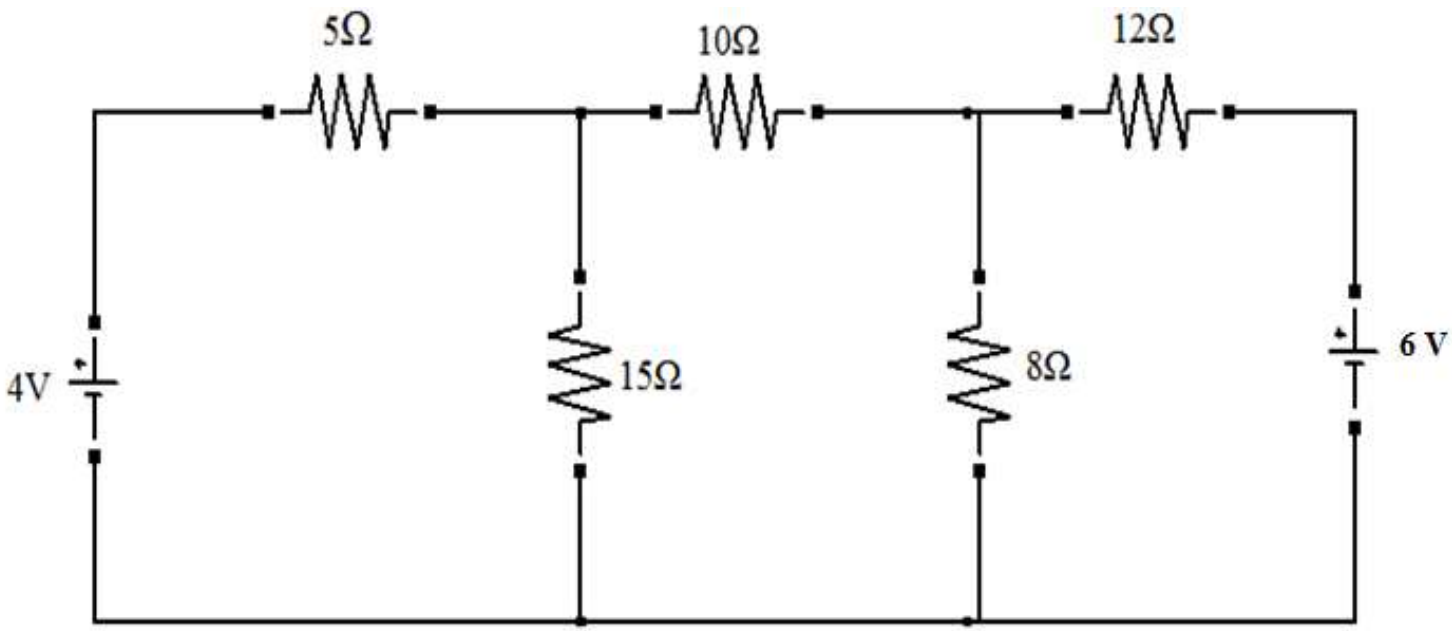

Select the nodes and a reference node in the given circuit.

Convert all voltage sources in to equivalent current sources.

$I_1 = \frac{4}{5} = 0.8$ A

$I_2 = \frac{6}{12} = 0.5$ A

The circuit becomes,

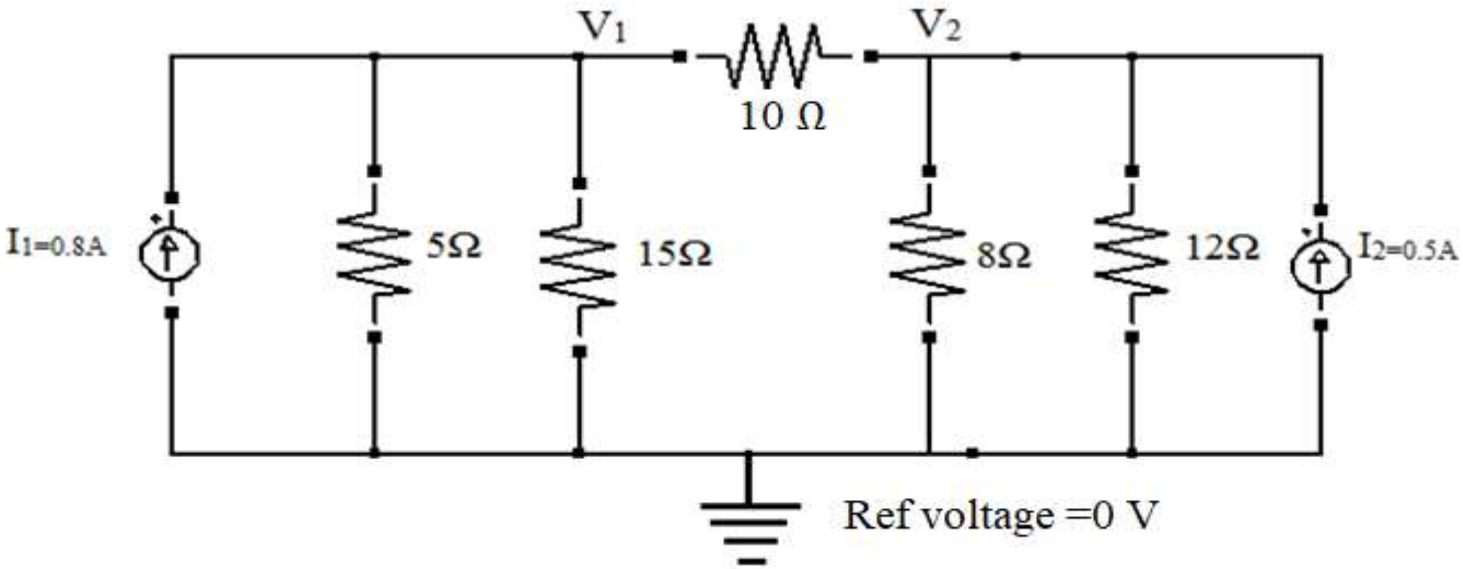

Apply KCL at node 1,

$$0.8 = \frac{V_1}{5} + \frac{V_1 - V_2}{10} + \frac{V_1}{15}$$

$$0.8 = \frac{V_1}{5} + \frac{V_1}{10} - \frac{V_2}{10} + \frac{V_1}{15}$$

$$0.8 = \frac{6V_1 + 3V_1 - 3V_2 + 2V_1}{30}$$

$$0.8 \times 30 = 6V_1 + 3V_1 - 3V_2 + 2V_1$$

$$24 = 11V_1 - 3V_2 \longrightarrow (1)$$

Apply KCL at node 2,

$$0.5 = \frac{V_2}{12} + \frac{V_2}{8} + \frac{V_2 - V_1}{10}$$

$$0.5 = \frac{10V_2 + 15V_2 + 12(V_2 - V_1)}{120}$$

$$0.5 \times 120 = 10V_2 + 15V_2 + 12V_2 - 12V_1$$

$$60 = -12V_1 + 37V_2 \longrightarrow (2)$$

By Cramer's rule

$$\begin{bmatrix} 11 & -3 \\ -12 & 37 \end{bmatrix} \begin{bmatrix} V_1 \\ V_2 \end{bmatrix} = \begin{bmatrix} 24 \\ 60 \end{bmatrix}$$

$$\Delta = \begin{bmatrix} 11 & -3 \\ -12 & 37 \end{bmatrix}$$

Δ = 407-36 =371

Δ = 371

$$\Delta V_1 = \begin{bmatrix} 24 & -3 \\ 60 & 37 \end{bmatrix}$$

= 888+180

ΔV_1 = 1068

$$\Delta V_2 = \begin{bmatrix} 11 & 24 \\ -12 & 60 \end{bmatrix}$$

= 660+288

ΔV_2 = 948

$V_1 = \frac{\Delta V_1}{\Delta} = \frac{1068}{371} = 2.878V$

$V_2 = \frac{\Delta V_2}{\Delta} = \frac{948}{371} = 2.56V$

Current through 8Ω Resistor $I_{8\Omega} = \frac{V_2}{8}$

$= \frac{2.56}{8}$

$I_{8\Omega} = 0.32Amps$

NETWORK THEOREMS

- Electric circuit theorems are always beneficial to help find voltage and currents in multi-loop circuits. These theorems use fundamental rules or formulas and basic equations of mathematics to analyse basic components of electrical or electronics parameters such as voltages, currents, resistance, and so on.

These fundamental theorems are

- Thevenin's theorem
- Norton’s theorem
- Maximum power transfer theorem
- Superposition theorem.

Thevenin's Theorem

Statement: A linear network consisting of a number of voltage sources and resistances can be replaced by an equivalent network having a single voltage source called Thevenin's voltage (V_{th}) and a single resistance (R_{th}).

Thevenin's equivalent circuit

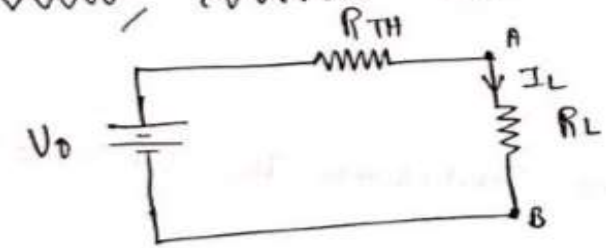

Where

V_0 – Open circuit voltage at terminals A B

R_{TH} – Thevenin's looking back resistances between terminals A and B

I_L – Load current through resistor R_L

$$I_L = \frac{V_0}{R_{TH} + R_L}$$

Step by step Procedure for Thevenin's equivalent circuit.

① Remove the load resistor whose current is required.

② Find the open circuit Voltage V_o, which across the two terminals where the load is removed.

③ All the Voltage sources are replaced by their internal resistances.

④ Calculate the Thevenin's looking back resistance R_{TH} from the two terminals.

⑤ Replace the entire network by the open circuit Voltage V_o in series with the equivalent Resistance R_{TH}.

(6) Connect the load resistance R_L where it was already remove.

(7) Then find the current flowing through R_L

$$\boxed{I_L = \frac{V_0}{R_{TH} + R_L}}$$

Problem

Find the current through the 0.1 Ω resistor in the fig. using Thevenin's method.

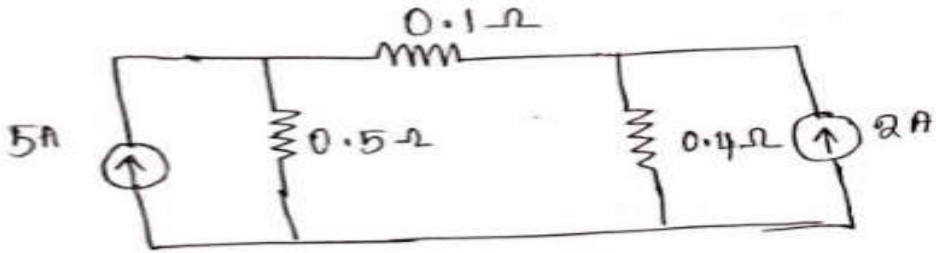

Solution

Step 1 : To find V_0 = ?

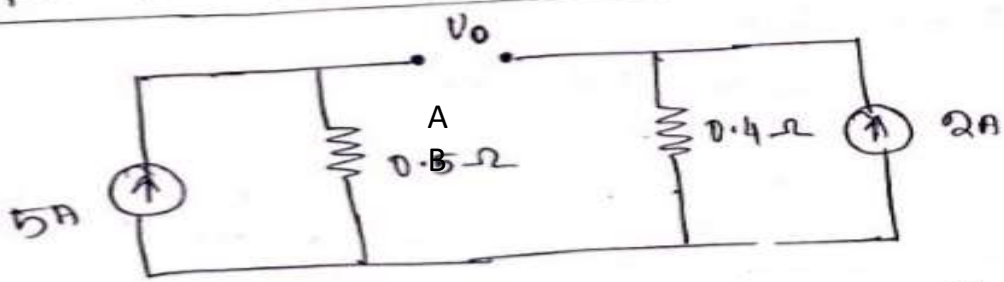

$V_1 = 5 \times 0.5 = 2.5V$

$V_2 = 2 \times 0.4 = 0.8V$

(This circuit is reduced by using Source Transformation].

[If we need we Transformation Voltage Source to current Source (or) current Source to Voltage Source)

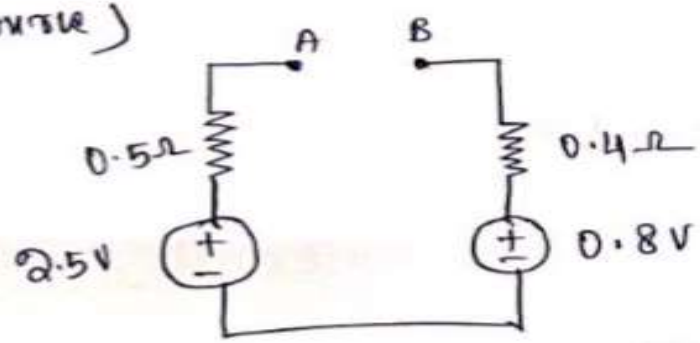

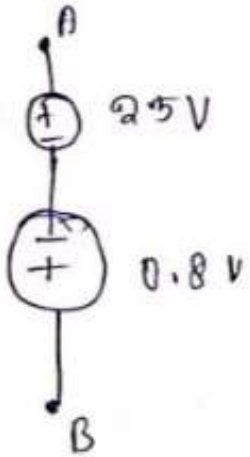

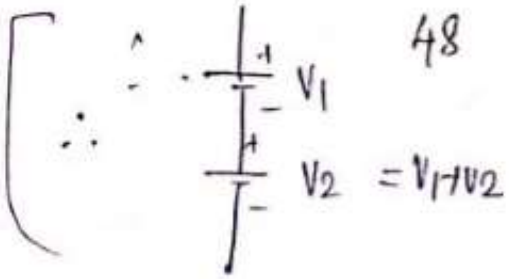

$$V_0 = 2.5V - 0.8V$$

$$\boxed{V_0 = 1.7V}$$

Step 2 : To Find R_{TH} = ?

Consider only Resistance Values.

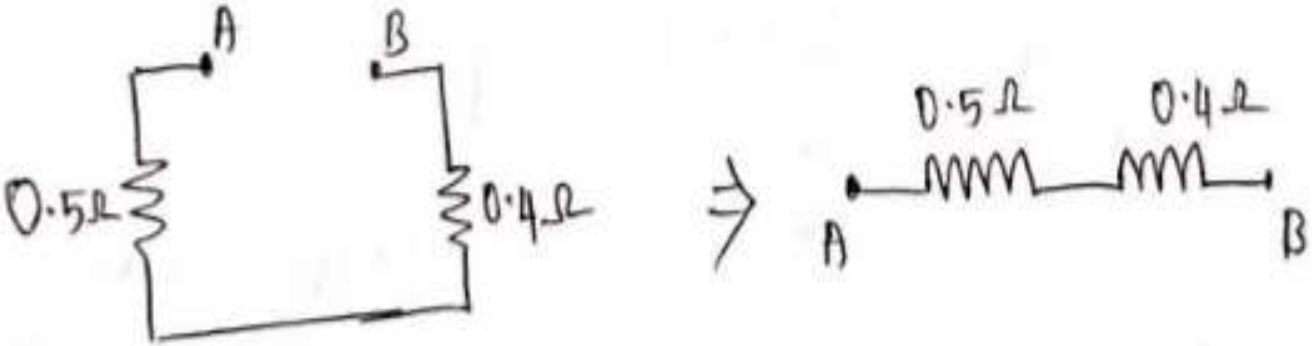

$$\boxed{R_{TH} = 0.9\,\Omega}$$

Step 3 : To find $I_L = ?$

Thevenin's equivalent circuit.

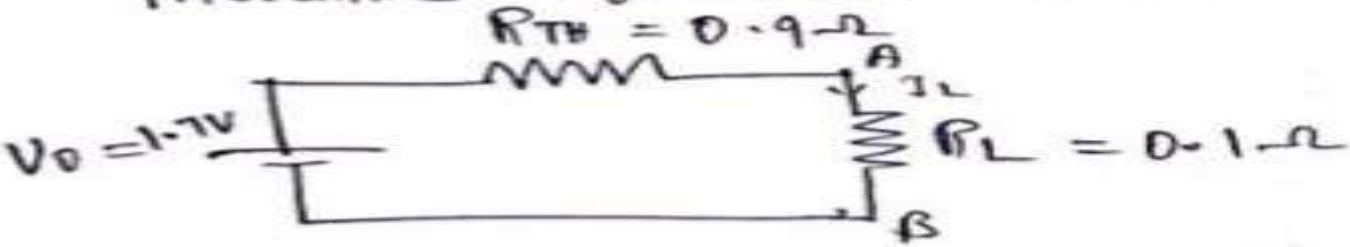

$$I_L = \frac{V_0}{R_{TH} + R_L}$$

$$I_L = \frac{1.7}{0.9 + 0.1}$$

$$\boxed{I_L = 1.7 \text{ Amps}}$$

UNIT - I
DC CIRCUITS

Elements of an Electric circuit:

An Electric circuit consists of following types of Elements.

Active elements:

Active Elements are the elements of a circuit which passes energy of their own and impart it to other element of the circuit.

Active elements of two types.

(a) Voltage Source
(b) current Source

Voltage Source

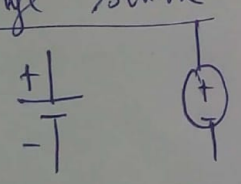

current Source

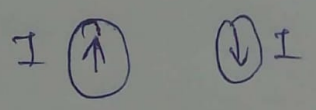

Passive Elements:

The passive Elements of an electric circuit do not passes energy of their own. They receive from the sources.

Passive elements are resistance, inductance and capacitance.

Scanned by CamScanner

UNIT - I

Electric Circuits (DC)

Basic Electrical quantities:

Current (I): The flow of free electrons in any conductor is called current. It is denoted by the letter I.

The unit of current is ampere.

Voltage (V): It is the force which causes to flow the electrons in any closed circuit.

The unit of voltage is Volts.

Power (P): Power is the rate of doing work.

$$\text{Power} = \frac{\text{Work done}}{\text{time}}$$

The unit of power is Joules / sec (or) watts

$$\text{Power (P)} = VI \quad \text{watts}$$

$$P = (IR)\,I = I^2R$$

$$P = I^2R \quad \text{watts}$$

$$P = \frac{V^2}{R} \quad \text{watts}$$

$$\boxed{P = VI = I^2R = \frac{V^2}{R}} \quad \text{watts}$$

Scanned by CamScanner

Basic Circuit Elements:

The three elements are used in Electrical circuits.

(i) Resistance
(ii) Inductance
(iii) capacitance.

Resistance (R):

The property of a substance which opposes the flow of current through it.

Resistance is denoted by letter 'R'

unit of Resistance is Ohm (Ω).

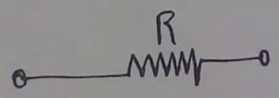

Inductance (L):

Inductor is the element in which energy is stored in the form of electromagnetic field.

It is denoted by letter 'L'

unit of Inductance is Henry (H)

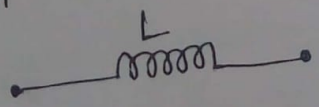

Capacitance (C):

The ability of capacitor to store electricity is known as its capacitance.

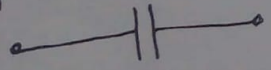

It is denoted by letter 'C'

unit of capacitance is Farad (f) (or) Micro farad (MF)

$10^{-6}F = \mu F$

$10^{-9}F = nF$

Scanned by CamScanner

Ohm's Law:

Ohms law states that at constant temperature the current flow through a conductor is directly proportional to the potential difference between the two ends of the conductor

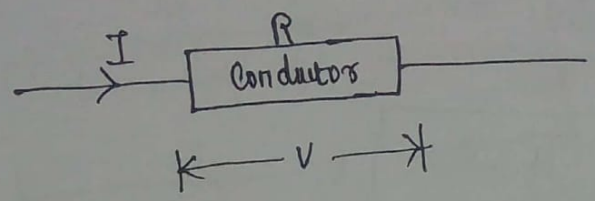

$$I \propto V$$

(or) $$V \propto I$$

$$\boxed{V = IR}$$

Where R – constant (or) Resistance of the conductor.

Applications of Ohms law:

By using Ohm's law we can find the resistance of a circuit, knowing only the voltage and the current in the circuit.

— x —

Problems:

(1) Current flowing through conductor is 5A and voltage across the conductor is 20V. Find the resistance of the conductor?

Given data:

Voltage (V) = 20V

Current (I) = 5A

To find: Resistance (R) = ?

Scanned by CamScanner

Solution:

By using ohms law

$$V = IR$$

$$R = \frac{V}{I}$$

$$R = \frac{20}{5}$$

$$\boxed{R = 4\,\Omega}$$

---

(2) Calculate the current and resistance of a 50W, 100V electric Lamp.

Given data:

Power (P) = 50 W

Voltage (V) = 100V

To find: $I = ?$

We know that $P = VI$

$$I = \frac{P}{V} = \frac{50}{100} = 0.5\ A$$

$$\boxed{I = 0.5 \text{ Amps}}$$

By Ohm's Law $V = IR$

$$R = \frac{V}{I} = \frac{100}{0.5} = 200$$

$$\boxed{R = 200\,\Omega}$$

Scanned by CamScanner

Resistors in Series and Parallel connection :

Resistance in Series : (Series circuit)

The circuit in which resistances are connected end to end is called a series circuit.

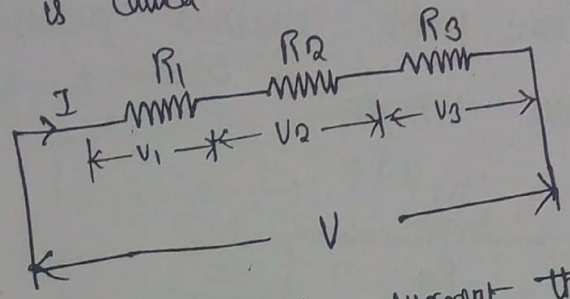

In series circuit, the current through all the resistors are same, but voltage drop across each is different.

The sum of the voltage drops across each resistor is equal to the applied voltage.

$$V = V_1 + V_2 + V_3$$

By Ohm's law

$$V_1 = I R_1$$

$$V_2 = I R_2$$

$$V_3 = I R_3$$

$V = IR$

$$V = IR_1 + IR_2 + IR_3$$

$$V = I(R_1 + R_2 + R_3)$$

$$\cancel{I}R = \cancel{I}(R_1 + R_2 + R_3)$$

$$\boxed{R_T = R_1 + R_2 + R_3}$$

where R_T is the Total (or) equivalent resistance of the circuit.

Scanned by CamScanner

Resistances in Parallel (Parallel Circuit)

Two (or) more resistances are connected in such a way that one end of each of them are joined to a common point and the other ends are joined to another common point connected across one another is called parallel circuit.

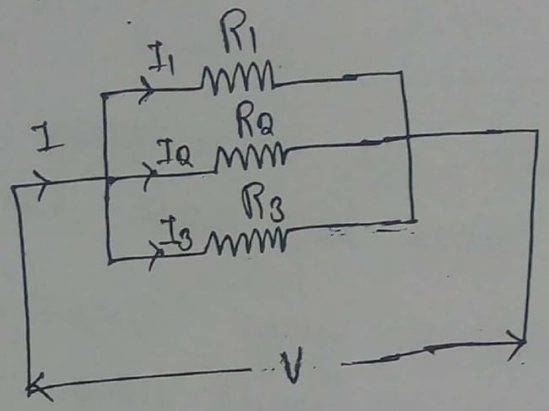

In parallel connection voltage across all the resistors is the same but the current in each is different.

Total current in the circuit is the sum of currents flowing through each resistance.

$$I = I_1 + I_2 + I_3$$

By Ohms law

$$I_1 = \frac{V}{R_1}$$

$$I_2 = \frac{V}{R_2}$$

$$I_3 = \frac{V}{R_3}$$

$$I = \frac{V}{R_1} + \frac{V}{R_2} + \frac{V}{R_3}$$

$$I = V\left(\frac{1}{R_1} + \frac{1}{R_2} + \frac{1}{R_3}\right)$$

$$\frac{I}{V} = \frac{1}{R_1} + \frac{1}{R_2} + \frac{1}{R_3}$$

$$\boxed{\frac{1}{R_T} = \frac{1}{R_1} + \frac{1}{R_2} + \frac{1}{R_3}}$$

Scanned by CamScanner

Inductors in Series and Parallel.

Inductors in Series

If two inductors are connected in Series, the Total inductance will be Sum of individual inductances:

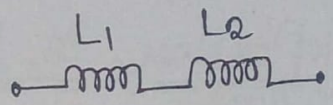

$$\boxed{L_T = L_1 + L_2}$$

Inductors in Parallel:

If two inductors are connected in Parallel, the equivalent inductance (or) Total inductance is given by the Sum of reciprocal of individual inductances.

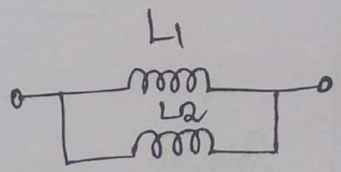

$$\frac{1}{L_T} = \frac{1}{L_1} + \frac{1}{L_2}$$

$$\boxed{L_T = \frac{L_1 L_2}{L_1 + L_2}}$$

Capacitors in Series and Parallel.

Capacitors in Series:

If two capacitors are connected in Series the equivalent capacitance is given by the Sum of reciprocal of individual capacitances.

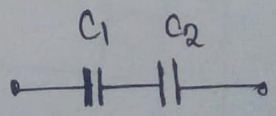

$$\frac{1}{C_T} = \frac{1}{C_1} + \frac{1}{C_2}$$

$$C_T = \frac{C_1 C_2}{C_1 + C_2}$$

Scanned by CamScanner

- **Capacitors in Parallel :**

If two capacitors are connected in parallel. the total capacitance will be sum of individual capacitances.

$$\boxed{C_T = C_1 + C_2}$$

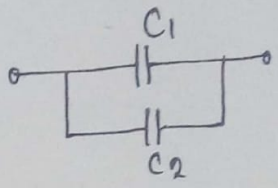

Problems on Resistor in Series and Parallel connection :

① Calculate the equivalent resistance of the following Combination of resistors and also the source current for the fig.

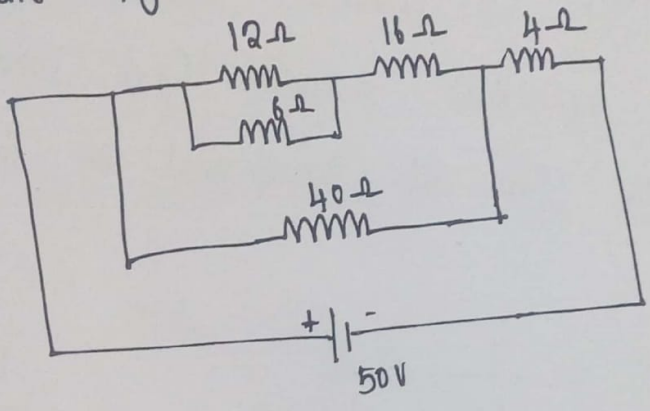

Solution :

12Ω and 6Ω in parallel.

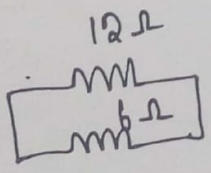

$\Rightarrow$ $R = \dfrac{R_1 R_2}{R_1 + R_2}$

$R = \dfrac{12 \times 6}{12 + 6}$

$R = 4\Omega$

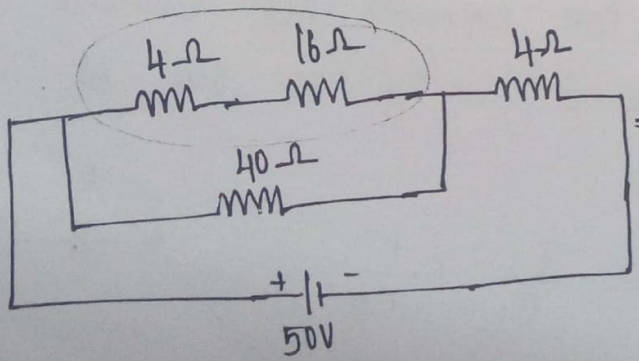

$\Rightarrow$ 4Ω and 6Ω are Connected in Series

$R = R_1 + R_2$

$= 4\Omega + 16\Omega$

$R = 20\Omega$

Scanned by CamScanner

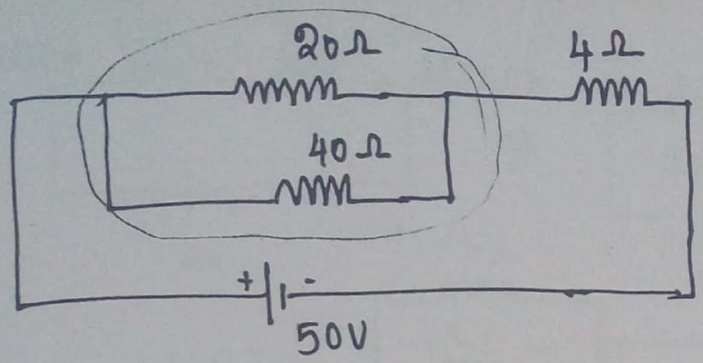

⇒ 20Ω and 40Ω are connected in parallel.

$$R = \frac{20 \times 40}{20+40}$$

$$R = 13.33\,\Omega$$

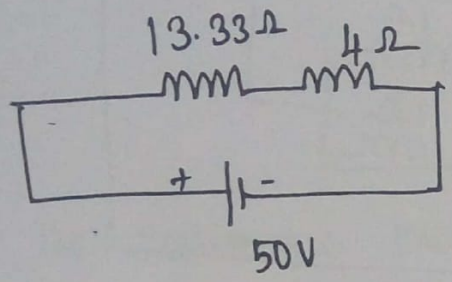

⇒ 13.33Ω and 4Ω are connected in series

$$R = 13.33 + 4\,\Omega$$

$$\boxed{R_T = 17.33\,\Omega}$$

By ohms law

$$V = IR$$

Total (or) equal Resistance $\boxed{R_T = 17.33\,\Omega}$

$$I = \frac{V}{R}$$

$$= \frac{50}{17.33}$$

$$I = \frac{50}{17.33}$$

$$\boxed{I = 2.88 \text{ Amps}}$$

Scanned by CamScanner

(2) All the resistance in figure are 1Ω each. Find the value of current I.

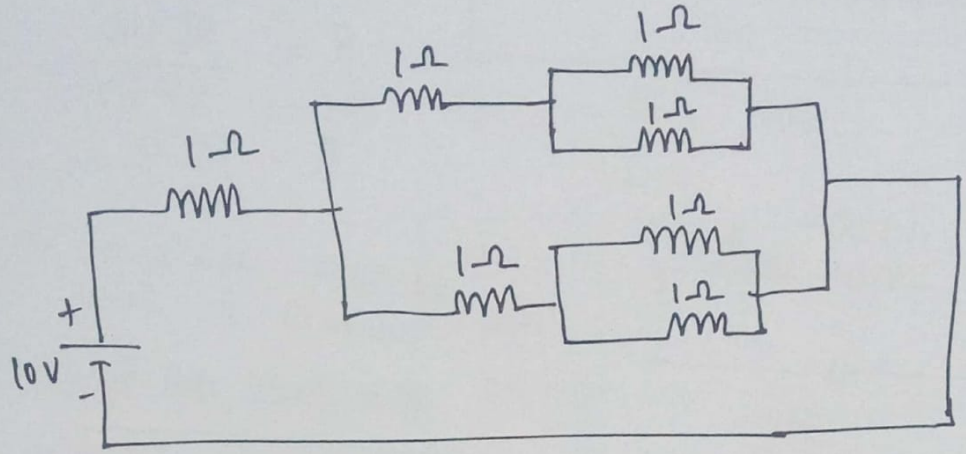

Solution :

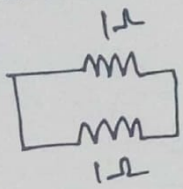

1Ω and 1Ω are connected in parallel

$\Rightarrow \frac{1 \times 1}{1+1} = 0.5\Omega$

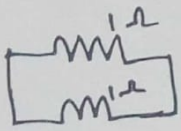

$\Rightarrow \frac{1 \times 1}{1+1} = 0.5\Omega$

The total circuit is simplified into single resistance in series with 10V source.

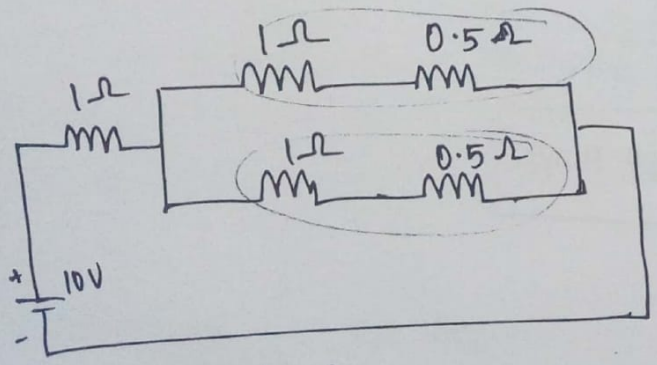

1Ω and 0.5Ω are connected in series

$R = 1 + 0.5$

$R = 1.5\Omega$

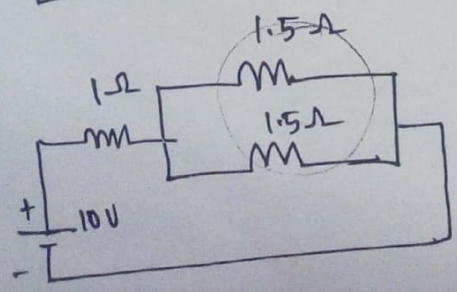

$\Rightarrow$

1.5Ω and 1.5 are connected in parallel

$R = \frac{1.5 \times 1.5}{1.5 + 1.5}$

$R = 0.75\Omega$

Scanned by CamScanner

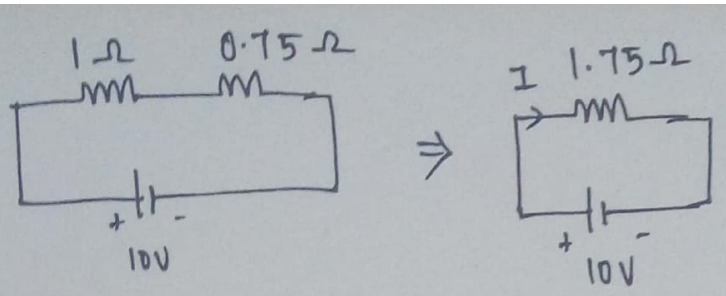

Current $I = \frac{10}{1.75}$

$$\boxed{I = 5.714 \text{ Amps}}$$

③ Find the resistance between the points A & B in the series - parallel network shown in figure.

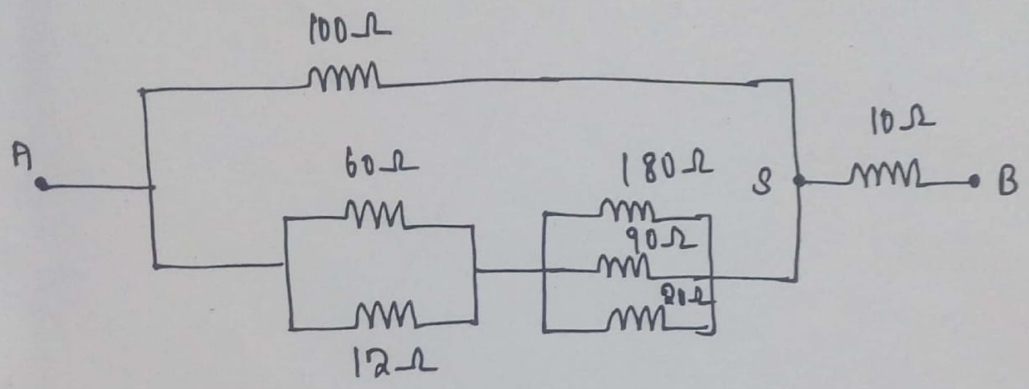

Solution:

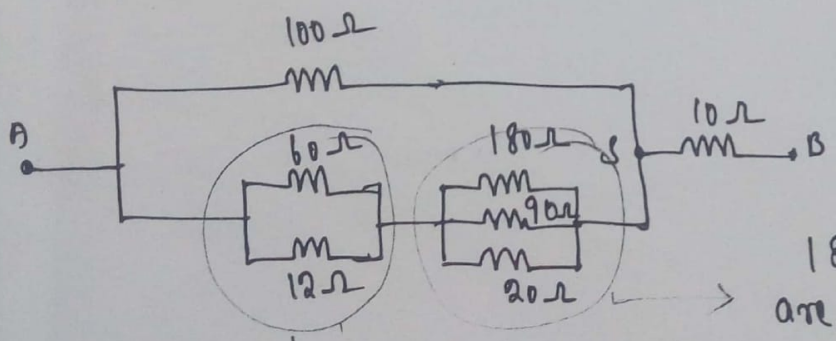

180Ω, 90Ω & 20Ω are connected in Parallel.

$$\frac{1}{R} = \frac{1}{R_1} + \frac{1}{R_2} + \frac{1}{R_3}$$

$$\frac{1}{R} = \frac{1}{180} + \frac{1}{90} + \frac{1}{20}$$

$$\frac{1}{R} = \frac{1+2+9}{180}$$

60Ω and 12Ω are connected in Parallel

$$R = \frac{60 \times 12}{60+12}$$

$$R = \frac{720}{72}$$

$$\boxed{R = 10\Omega}$$

Scanned by CamScanner

$$\frac{1}{R} = \frac{12}{180}$$

$$R = \frac{180}{12} = 15$$

$$\boxed{R = 15\Omega}$$

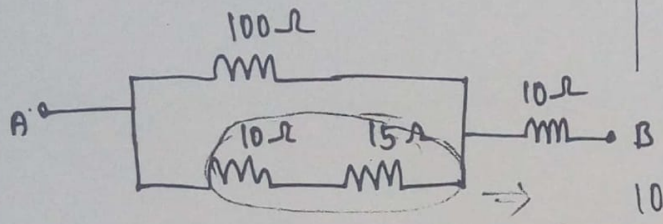

→ 10Ω and 2Ω are connected in series $R = 10\Omega + 15\Omega$

$$\boxed{R = 25\Omega}$$

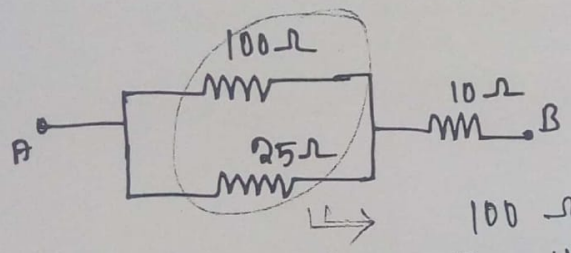

→ 100Ω and 25Ω are connected in parallel

$$R = \frac{100 \times 25}{100 + 25} = \frac{2500}{125}$$

$$\boxed{R = 20\Omega}$$

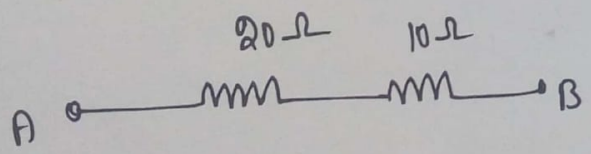

Resistance between points A & B

$$R_{AB} = 20 + 10$$

$$\boxed{R_{AB} = 30\Omega}$$

Scanned by CamScanner

V - I relation ship of Circuit Elements (R, L & C)

Circuit Element	Voltage	Current	Power
Resistance	$V = IR$	$I = \frac{V}{R}$	$P = VI$
Inductance	$V = L\frac{dI}{dt}$	$I = \frac{1}{L}\int v\,dt$	$P = LI\frac{dI}{dt}$
Capacitance	$V = \frac{1}{C}\int I\,dt$	$I = C\frac{dv}{dt}$	$P = Cv\frac{dv}{dt}$

Series and Parallel Connected Sources.

(i) Voltage Sources in Series:

Voltage Sources in series may be replaced by an equivalent Voltage Sources having a Voltage equal to the algebraic sum of the individual sources.

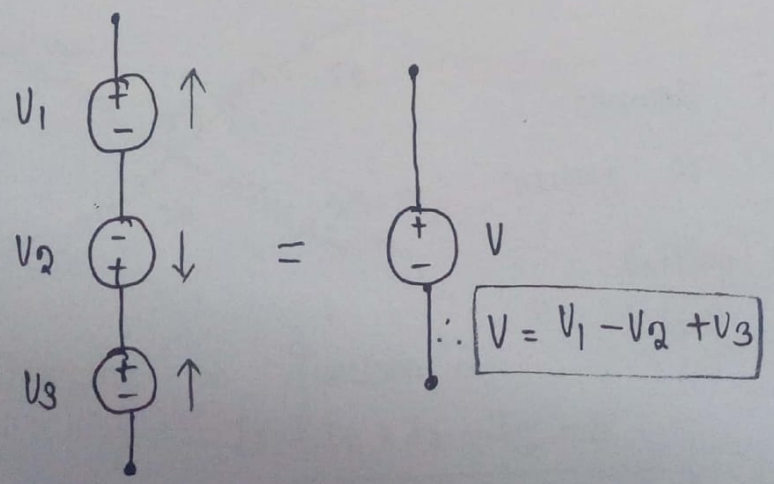

↑ + − ⇒ Potential rise. (+ sign)

↓ − + ⇒ Potential drop (− sign)

Scanned by CamScanner

② . **Current Sources in Parallel :**

The algebraic sum of the parallel current sources is equivalent to the single current source.

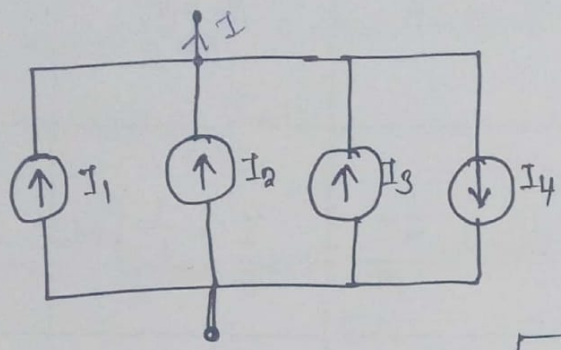

=

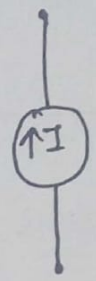

$I = I_1 + I_2 + I_3 - I_4$

$$\boxed{\therefore I = I_1 + I_2 + I_3 - I_4}$$

Kirchoff's Laws

Sometimes complicated circuit can not be simplified into a simple series (or) simple parallel (or) series-parallel circuit and cannot be solved by applying ohm's Law. Such circuit may be solved by applying kirchoff's laws.

First law [KIRCHOFF'S CURRENT LAW (KCL)]

(OR)

POINT LAW

① Kirchoff's current Law:

The algebraic sum of current flowing towards a junction in an electric circuit is zero

$$\sum I \text{ at junction point} = 0$$

$$\boxed{\text{Sum of entering current} = \text{Sum of Leaving current}}$$

eg.

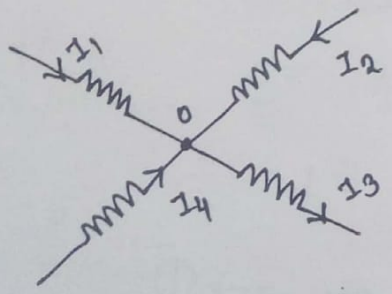

currents I_1, I_2, I_3 and I_4 meeting at point 'o'

entering current = +ve sign

Leaving current = −ve sign.

Total current at junction 'o'

$$\Rightarrow I_1 + I_2 + I_4 - I_3 = 0$$

$$\boxed{I_1 + I_2 + I_4 = I_3}$$

Scanned by CamScanner

② Second Law : Kirchoff's Voltage Law (or) Mesh Law

Kirchoff's Voltage Law (KVL) :

In any closed circuit (or) mesh, the algebraic sum of all electromotive force (emf) and the voltage drops is equal to Zero.

$\therefore$ Algebraic sum of emf's + Algebraic sum of voltage drops = 0

Around a closed path $\Sigma V = 0$

(or)

$$\boxed{\text{Potential rise} = \text{Potential drop}}$$

Potential rise should be considered Positive, while Potential drop should be considered Negative

eg.

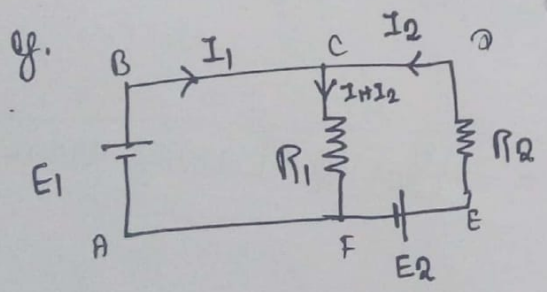

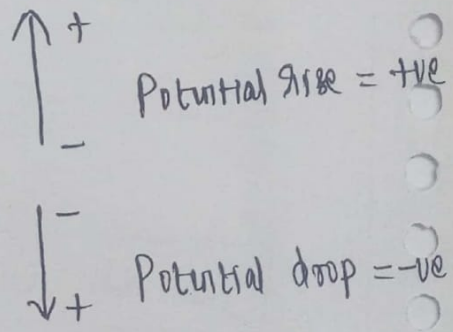

In closed Loop ABCFA. $\Sigma V = 0$

Apply KVL $\quad -(I_1 + I_2)R_1 + E_1 = 0$

$$(I_1 + I_2)R_1 = E_1$$

$$I_1 R_1 + I_2 R_2 = E_1 \rightarrow ①$$

Scanned by CamScanner

In closed Loop CDEFC

Apply KVL

$$I_2R_2 - E_2 + (I_1+I_2)R_1 = 0$$

$$I_2R_2 + I_1R_1 + I_2R_1 = E_2$$

$$I_1R_1 + I_2(R_1+R_2) = E_2 \rightarrow (2)$$

Solve the above equation for I_1 & I_2.

Sign of emf's and Voltage drops.

Sign of emf's (battery terminal)

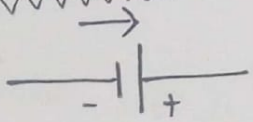

⇒ We go from -ve terminal of a battery to +ve terminal. (+ve sign)

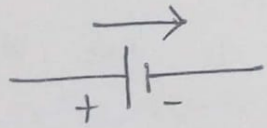

⇒ We go from +ve terminal of a battery to -ve t (-ve sign)

Sign of Voltage drops

Voltage drop means 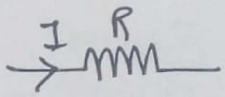

$V = IR$

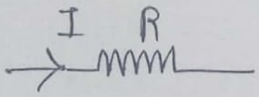

$= -IR$ (-ve)

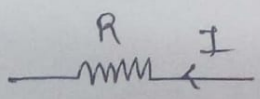

$= +IR$ (+ve)

Scanned by CamScanner

Problems on KCL:

① Apply KCL, find V_1 & V_2 for the figure.

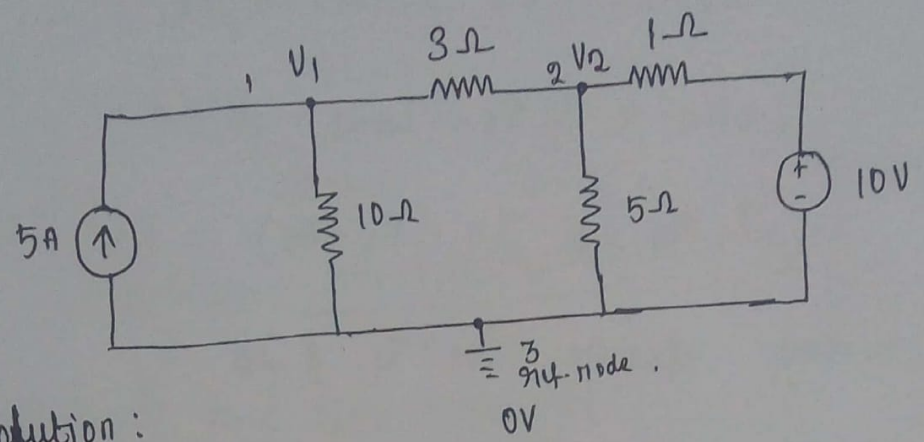

Solution:

Node: A node is a point in a network where two or more elements are joined.

active element: An active element is one which supplies electrical energy. eg. battery sources.

Passive element: Passive element is one which receives electrical energy. eg. R, L, C elements.

Solution:

⇒ Select nodes 1, 2, 3

⇒ 3 node is reference node (grounded)

reference voltage = 0V

Consider,

node 1 voltage is V_1

node 2 voltage is V_2.

Scanned by CamScanner

Apply Kirchoff's current Law in node1

$$\boxed{\text{Sum of entering current} = \text{Sum of leaving current}}$$

$$5 = \frac{V_1 - 0}{10} + \frac{V_1 - V_2}{3}$$

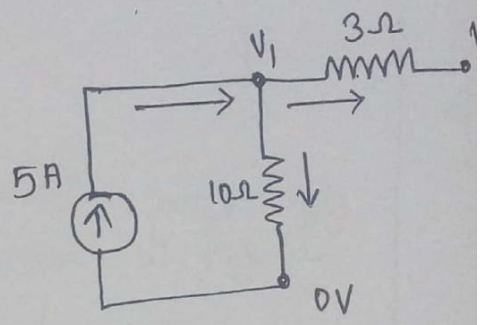

$$5 = \frac{3V_1 + 10(V_1 - V_2)}{30}$$

$$5 = \frac{3V_1 + 10V_1 - 10V_2}{30}$$

$$5 \times 30 = 3V_1 + 10V_1 - 10V_2$$

$$13V_1 - 10V_2 = 150 \longrightarrow (1)$$

Apply KCL at node 2.

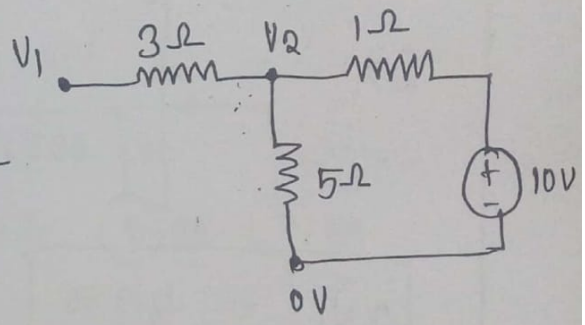

$$0 = \frac{V_2 - V_1}{3} + \frac{V_2 - 10}{1} + \frac{V_2 - 0}{5}$$

$$0 = \frac{V_2 - V_1}{3} + \frac{V_2 - 10}{1} + \frac{V_2}{5}$$

$$0 = \frac{5(V_2 - V_1) + 15(V_2 - 10) + V_2(3)}{15}$$

$$0 \times 15 = 5V_2 - 5V_1 + 15V_2 - 150 + 3V_2$$

$$0 = 8V_2 - 5V_1 + 15V_2 - 150$$

$$-5V_1 + 23V_2 = 150 \longrightarrow (2)$$

Scanned by CamScanner

Solve equation ① & ② Find V_1 & V_2

$$\begin{bmatrix} 13 & -10 \\ -5 & 23 \end{bmatrix} \begin{bmatrix} V_1 \\ V_2 \end{bmatrix} = \begin{bmatrix} 150 \\ 150 \end{bmatrix}$$

By using Cramer's rule

$$\Delta = \begin{bmatrix} 13 & -10 \\ -5 & 23 \end{bmatrix} = 299 - 50 = 249$$

$$\boxed{\Delta = 249}$$

$$\Delta V_1 = \begin{bmatrix} 150 & -10 \\ 150 & 23 \end{bmatrix} = 3450 + 1500$$

$$\boxed{\Delta V_1 = 4950}$$

$$\Delta V_2 = \begin{bmatrix} 13 & 150 \\ -5 & 150 \end{bmatrix} = 1950 + 750$$

$$\boxed{\Delta V_2 = 2700}$$

$$V_1 = \frac{\Delta V_1}{\Delta} = \frac{4950}{249} = 19.87V$$

Scanned by CamScanner

$$V_2 = \frac{\Delta V_2}{\Delta} = \frac{2700}{249} = 10.84\ V$$

$$\boxed{\begin{aligned} V_1 &= 19.87\ V \\ V_2 &= 10.84\ V \end{aligned}}$$

(2) Find the current through 12Ω resistor in fig.

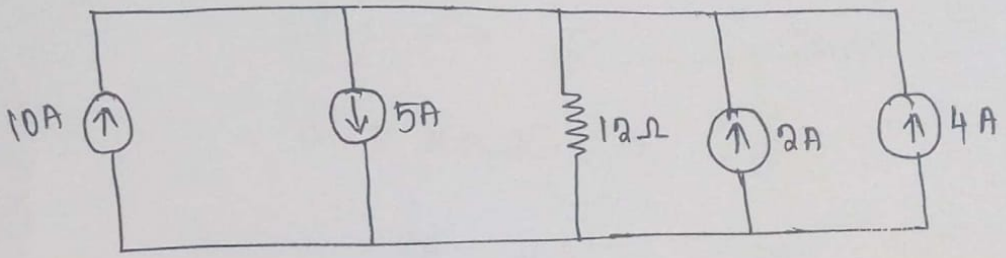

Solution

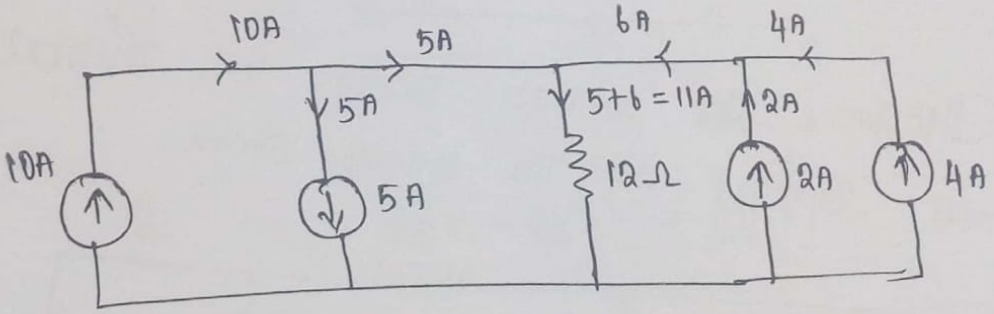

Incoming current at 12Ω resistor is 5+6 = 11A

current through 12Ω resistor = 11 Amps.

Scanned by CamScanner

③ Determine the current through resistance R_3 in the given circuit.

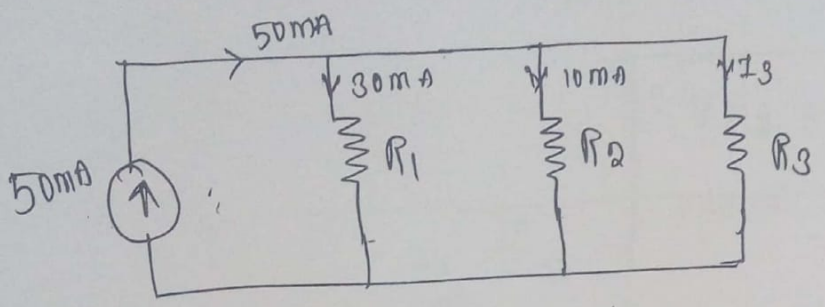

Solution:

Apply KCL

$$I_T = I_1 + I_2 + I_3$$

$$50 = 30 + 10 + I_3$$

$$I_3 = 50 - 40$$

$$\therefore \boxed{I_3 = 10 \text{ mA}}$$

④ Determine the current through 6Ω resistor and Power supplied by the current source.

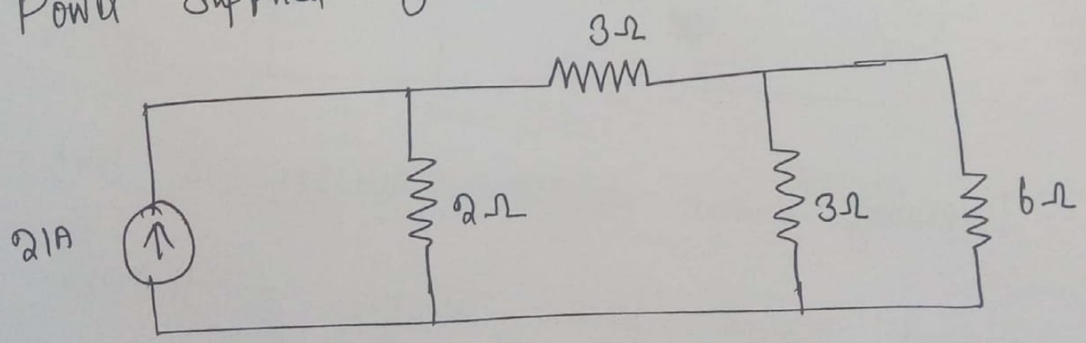

Solution: Consider 3 nodes are 1, 2 & 3

3rd node reference node. So grounded

Node 1 & 2 voltages are V_1 and V_2.

Scanned by CamScanner

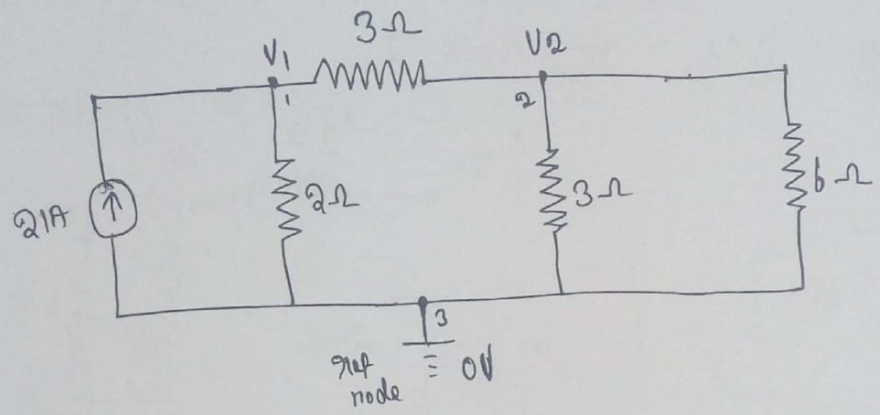

Apply KCL at node 1

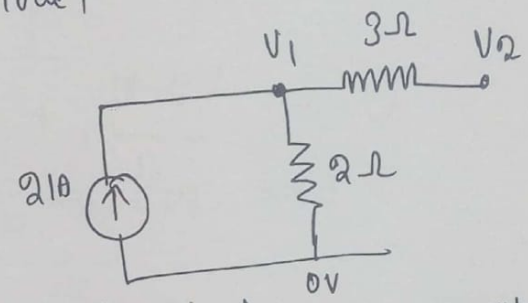

Sum of entering current = Sum of Leaving current

$$21 = \frac{V_1 - V_2}{3} + \frac{V_1 - 0}{2}$$

$$21 = \frac{2(V_1 - V_2) + 3V_1}{6}$$

$$21 \times 6 = 2V_1 - 2V_2 + 3V_1$$

$$126 = 5V_1 - 2V_2$$

$$5V_1 - 2V_2 = 126 \longrightarrow (1)$$

Scanned by CamScanner

Apply KCL at node 2.

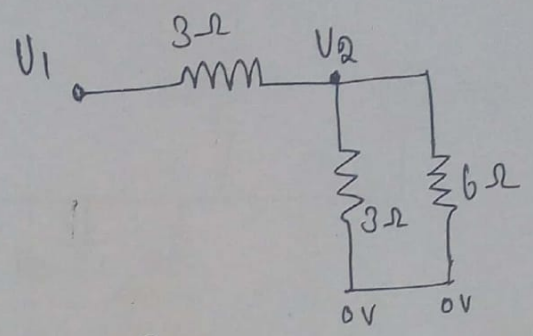

Sum of entering current = Sum of Leaving current

$$0 = \frac{V_2 - V_1}{3} + \frac{V_2 - 0}{3} + \frac{V_2 - 0}{6}$$

$$0 = \frac{V_2 - V_1}{3} + \frac{V_2}{3} + \frac{V_2}{6}$$

$$0 = \frac{6(V_2 - V_1) + 6V_2 + 3V_2}{18}$$

$$0 \times 18 = 6V_2 - 6V_1 + 6V_2 + 3V_2$$

$$0 = -6V_1 + 12V_2 + 3V_2$$

$$0 = -6V_1 + 15V_2$$

Scanned by CamScanner

$$-6V_1 + 15V_2 = 0 \rightarrow (2)$$

Simplifying equation (1) & (2) we get V_1 & V_2 values.

by using Cramer rule.

$$\begin{bmatrix} 5 & -2 \\ -6 & 15 \end{bmatrix} \begin{bmatrix} V_1 \\ V_2 \end{bmatrix} = \begin{bmatrix} 126 \\ 0 \end{bmatrix}$$

$$\Delta = \begin{bmatrix} 5 & -2 \\ -6 & 15 \end{bmatrix} = 75 - 12 = 63$$

$$\boxed{\Delta = 63}$$

$$\Delta V_1 = \begin{bmatrix} 126 & -2 \\ 0 & 15 \end{bmatrix} = 1890 - 0$$

$$\boxed{\Delta V_1 = 1890}$$

$$\Delta V_2 = \begin{bmatrix} 5 & 126 \\ -6 & 0 \end{bmatrix} = 0 + 756$$

$$\boxed{\Delta V_2 = 756}$$

Scanned by CamScanner

$$V_1 = \frac{\Delta V_1}{\Delta} = \frac{1890}{63} = 30V$$

$$V_2 = \frac{\Delta V_2}{\Delta} = \frac{756}{63} = 12V$$

$$\boxed{\begin{aligned} V_1 &= 30V \\ V_2 &= 12V \end{aligned}}$$

Current through 6Ω resistor $= \frac{V_2}{6} = \frac{12}{6}$

$\left[I = \frac{V}{R} \right]$

$$\boxed{I_{6\Omega} = 2 \text{ Amps}}$$

Problems on KVL

① Apply KVL and solve the problem shown in fig.

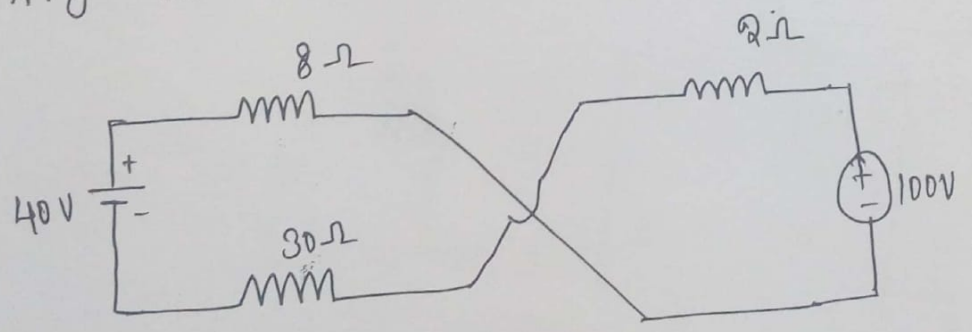

Solution -

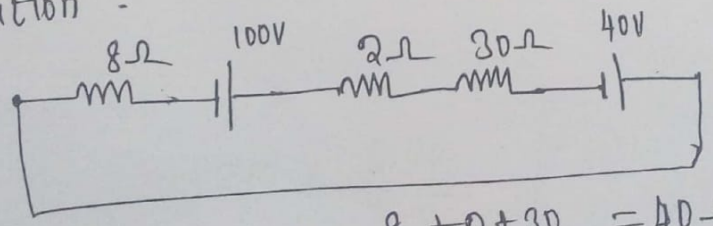

Total Resistance $= 8 + 2 + 30 = 40\Omega$

Total Voltage $= 100 + 40 = 140V$

$V = 140V$

$R = 40\Omega$

Scanned by CamScanner

Total current through the circuit $(I) = \frac{V}{R}$

$= \frac{140}{40}$

$$\boxed{I = 3.5 \text{ Amps}}$$

(2) Calculate current through 6Ω resistor by KVL for figure.

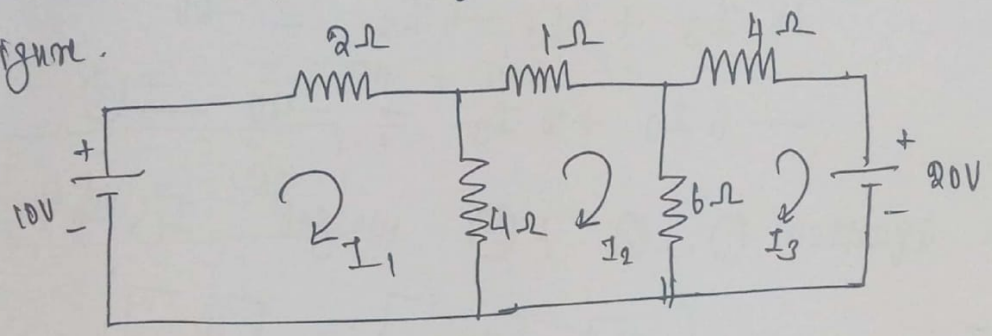

Solution:

Apply KVL at Loop 1

(i) $\Sigma V = 0$

$$-2I_1 - 4(I_1 - I_2) + 10 = 0$$

$$-2I_1 - 4I_1 + 4I_2 + 10 = 0$$

$$-6I_1 + 4I_2 + 10 = 0$$

$$6I_1 - 4I_2 = 10 \rightarrow (1)$$

(or)

(ii) Potential drop = Potential rise.

$$2I_1 + 4(I_1 - I_2) = 10$$

$$2I_1 + 4I_1 - 4I_2 = 10$$

$$6I_1 - 4I_2 = 10 \longrightarrow (1)$$

Scanned by CamScanner

Apply KVL at Loop 2,

$$1 I_2 + 6(I_2 - I_3) + 4(I_2 - I_1) = 0$$

$$I_2 + 6 I_2 - 6 I_3 + 4 I_2 - 4 I_1 = 0$$

$$-4 I_1 + 11 I_2 - 6 I_3 = 0 \rightarrow (2)$$

Apply KVL at Loop 3

$$4 I_3 + 6(I_3 - I_2) = -20$$

$$4 I_3 + 6 I_3 - 6 I_2 = -20$$

$$-6 I_2 + 10 I_3 = -20 \rightarrow (3)$$

Solve equation (1), (2) & (3) we get I_1, I_2 & I_3

$$\begin{bmatrix} 6 & -4 & 0 \\ -4 & 11 & -6 \\ 0 & -6 & 10 \end{bmatrix} \begin{bmatrix} I_1 \\ I_2 \\ I_3 \end{bmatrix} = \begin{bmatrix} 10 \\ 0 \\ -20 \end{bmatrix}$$

current through 6Ω resistor $= I_3 - I_2$

Find I_2 & I_3.

$$\Delta = \begin{bmatrix} 6 & -4 & 0 \\ -4 & 11 & -6 \\ 0 & -6 & 10 \end{bmatrix}$$

$$\Delta = 6 \begin{bmatrix} 11 & -6 \\ -6 & 10 \end{bmatrix} + 4 \begin{bmatrix} -4 & -6 \\ 0 & 10 \end{bmatrix} + 0 \begin{bmatrix} -4 & 11 \\ 0 & -6 \end{bmatrix}$$

$$\Delta = 6(110 - 36) + 4(-40 + 0) + 0$$

$$\Delta = 444 - 160 = 284$$

Scanned by CamScanner

$$\boxed{\Delta = 284}$$

$$\Delta I_2 = \begin{bmatrix} 6 & 10 & 0 \\ -4 & 0 & -6 \\ 0 & -20 & 10 \end{bmatrix}$$

$$= 6(0-120) - 10(-40+0) + 0\,(\cancel{\ }^{0})$$

$$= -720 + 400$$

$$\boxed{\Delta I_2 = -320}$$

$$\Delta I_3 = \begin{bmatrix} 6 & -4 & 10 \\ -4 & 11 & 0 \\ 0 & -6 & -20 \end{bmatrix}$$

$$= 6(-220+0) + 4(80-0) + 10(24-0)$$

$$\Delta I_3 = -1320 + 320 + 240$$

$$\boxed{\Delta I_3 = -760}$$

$$I_2 = \frac{\Delta I_2}{\Delta} = \frac{-320}{284} = -1.1267 \text{ Amps}$$

$$I_3 = \frac{\Delta I_3}{\Delta} = \frac{-760}{284} = -2.676 \text{ Amps}$$

Scanned by CamScanner

current through 6Ω resistor $= I_2 - I_3$

$= -1.1267 + 2.676$

$$\boxed{I_{6\Omega} = 1.549 \text{ Amps}}$$

Scanned by CamScanner

Current and Voltage Soure Transformation.

The Voltage and current Sources may be interchanged without affecting the remainder of the circuit, this technique is called " Source Transformation".

Source Transformation

- Voltage to current Source
- current to Voltage Source.

VOLTAGE TO CURRENT SOURCE:

Voltage Source in Series with the resistance can be replaced by current source in Parallel with resistance & Vice Versa.

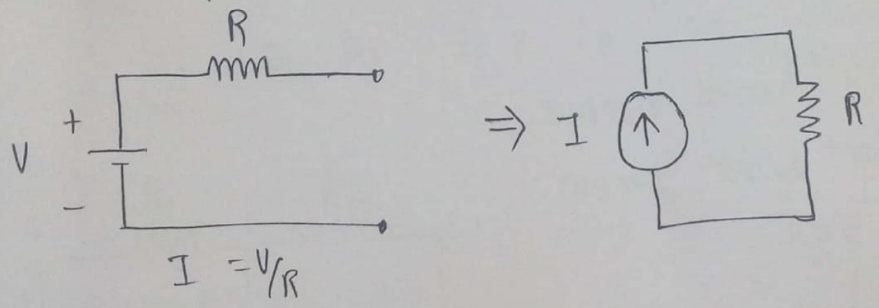

CURRENT TO VOLTAGE SOURCE:

current Source in Parallel with the resistance can be replaced by Voltage Source in Series with resistance.

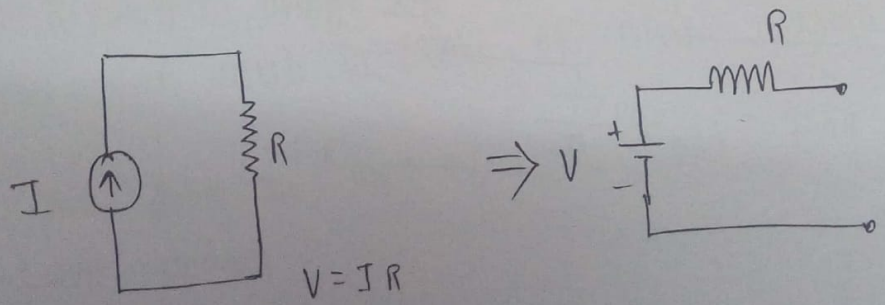

Scanned by CamScanner

Problems

(1) Convert the following Voltage Source in to equivalent current Source:

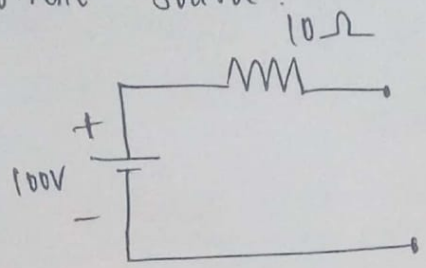

Solution: $V = 100V$ $R = 10\Omega$ $V = IR$

$$I = \frac{V}{R} = \frac{100}{10} = 10A$$

$$\boxed{I = 10A}$$

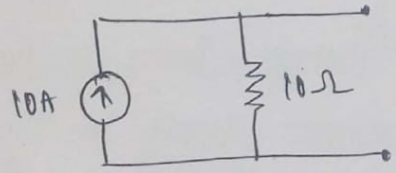

(2) Convert the following current Source into an equivalent Voltage Source?

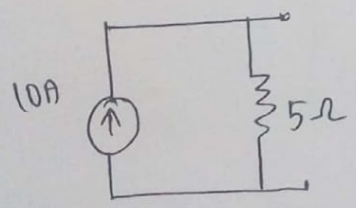

Solution: $I = 10A$
$R = 5\Omega$

$$V = IR = 10 \times 5$$

$$\boxed{V = 50V}$$

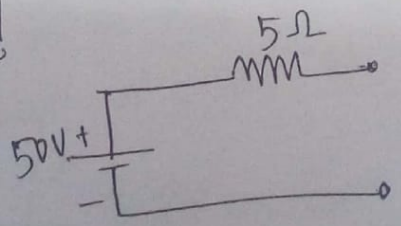

Scanned by CamScanner

Maxwell's Mesh current method [Loop current method]

In this method Kirchoff's Voltage law is applied to a network to write mesh equations in terms of Mesh currents instead of branch currents.

Steps followed for mesh current method

(i) Each mesh (or) Loop is assigned a separate mesh currents

(ii) Assume all Loop currents are flow in clockwise direction.

(iii) If two Mesh currents are flowing through a circuit element, actual current in the circuit element is algebraic sum of two.

eg. In fig I_1 & I_2 are flowing through R_3

$\Rightarrow$ current through R_3 is $I_1 - I_2$ (Loop1)

current through R_3 is $I_2 - I_1$ (Loop 2)

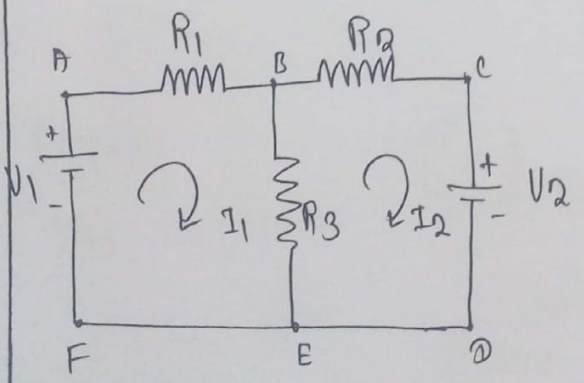

(iv) Kirchoff's Voltage Law is applied to write equation for each mesh in terms of Mesh currents.

(v) Now solve the Mesh equations and Find all the Loop currents.

Scanned by CamScanner

(g) Explanation for mesh current method

Let V_1 & V_2 are two batteries.

Apply KVL at Loop 1 (ABEFA)

$$R_1 I_1 + R_3 (I_1 - I_2) = V_1$$

$$R_1 I_1 + R_3 I_1 - R_3 I_2 = V_1$$

$$(R_1 + R_3) I_1 - R_3 I_2 = V_1 \rightarrow (1)$$

Apply KVL at Loop 2 (BCDEB)

$$R_2 I_2 + R_3 (I_2 - I_1) = -V_2$$

$$R_2 I_2 + R_3 I_2 - R_3 I_1 = -V_2$$

$$-R_3 I_1 + (R_2 + R_3) I_2 = -V_2 \rightarrow (2)$$

(or)

To directly form the matrix is written as

General matrix

$$[R][I] = [V]$$

Where

R is the resistance matrix

I is the current matrix

V is the voltage matrix.

Scanned by CamScanner

$$\begin{bmatrix} R_{11} & R_{12} & R_{13} \\ R_{21} & R_{22} & R_{23} \\ R_{31} & R_{32} & R_{33} \end{bmatrix} \begin{bmatrix} I_1 \\ I_2 \\ I_3 \end{bmatrix} = \begin{bmatrix} V_1 \\ V_2 \\ V_3 \end{bmatrix}$$

R_{11} is the total resistance of Loop 1

R_{22} is the total resistance of Loop 2

R_{33} is the total resistance of Loop 3

R_{12} & R_{21} is the common resistance between Loop 1 & 2

R_{23} & R_{32} is the common resistance between Loop 2 & 3

R_{13} & R_{31} is the common resistance between Loop 1 & 3

From the matrix we can find the various Loop currents by using cramer rule,

$$I_1 = \frac{\Delta I_1}{\Delta} \; ; \quad I_2 = \frac{\Delta I_2}{\Delta} \; ; \quad I_3 = \frac{\Delta I_3}{\Delta}$$

Problems:

For the circuit, find the Load current and Power?

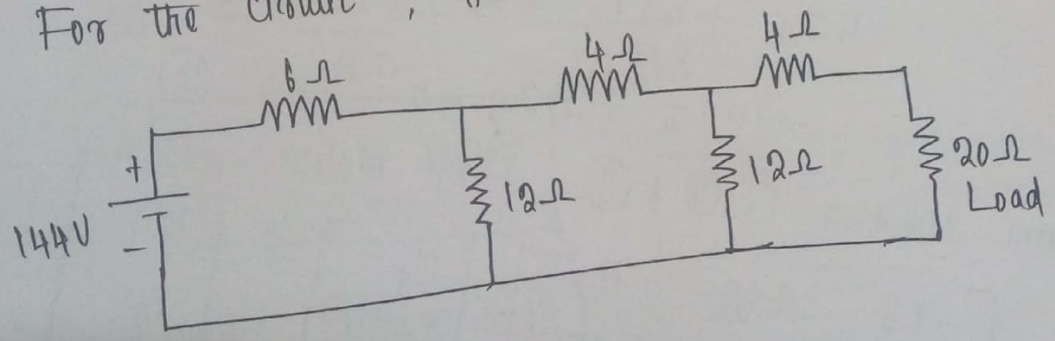

Scanned by CamScanner

Solution

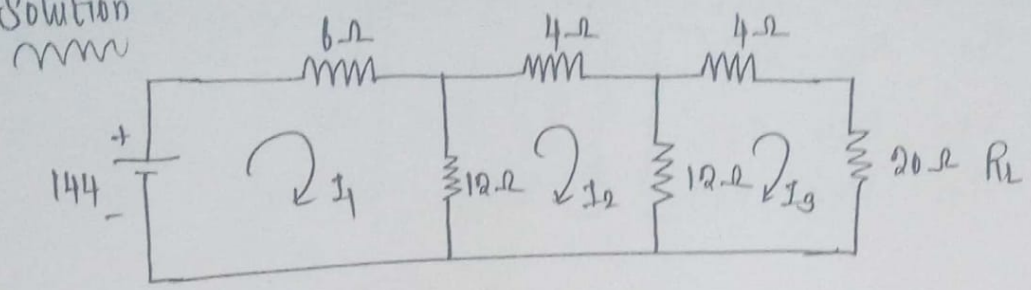

Apply KVL at Loop 1

Potential drop = Potential rise

$$6I_1 + 12(I_1 - I_2) = 144$$

$$6I_1 + 12I_1 - 12I_2 = 144$$

$$18I_1 - 12I_2 = 144 \rightarrow (1)$$

Apply KVL at Loop 2

$$4I_2 + 12(I_2 - I_3) + 12(I_2 - I_1) = 0$$

$$4I_2 + 12I_2 - 12I_3 + 12I_2 - 12I_1 = 0$$

$$-12I_1 + 28I_2 - 12I_3 = 0 \rightarrow (2)$$

Apply KVL at Loop 3

$$4I_3 + 20I_3 + 12(I_3 - I_2) = 0$$

$$4I_3 + 20I_3 + 12I_3 - 12I_2 = 0$$

$$-12I_2 + 36I_3 = 0 \rightarrow (3)$$

From equation (1), (2) & (3) Form matrix

$$\begin{bmatrix} 18 & -12 & 0 \\ -12 & 28 & -12 \\ 0 & -12 & 36 \end{bmatrix} \begin{bmatrix} I_1 \\ I_2 \\ I_3 \end{bmatrix} = \begin{bmatrix} 144 \\ 0 \\ 0 \end{bmatrix}$$

Scanned by CamScanner

By applying Cramer's rule

$$\Delta = \begin{bmatrix} 18 & -12 & 0 \\ -12 & 28 & -12 \\ 0 & -12 & 36 \end{bmatrix}$$

$$\Delta = 18(1008 - 144) + 12(-432 - 0) + \cancel{0(\quad)}^{0}$$

$$\Delta = 15552 - 5184$$

$$\boxed{\Delta = 10368}$$

$$\Delta I_3 = \begin{bmatrix} 18 & -12 & 144 \\ -12 & 28 & 0 \\ 0 & -12 & 0 \end{bmatrix}$$

$$= 18(\cancel{0})^{0} + 12(\cancel{0})^{0} + 144(144 - 0)$$

$$\boxed{\Delta I_3 = 20736}$$

$$I_3 = \frac{\Delta I_3}{\Delta} = \frac{20736}{10368}$$

$$\boxed{I_3 = 2 \text{ Amps}}$$

Load Resistor $(R_L) = 20\,\Omega$

current flowing through Load resistor $(I_L) = 2$ Amps.

Power delivered to the load $(P_L) = I_L^2 R_L = (2)^2 \times 20$

$$\boxed{P_L = 80 \text{ watts}}$$

Scanned by CamScanner

(2) Determine the current in the 4Ω branch in the circuit shown in fig.

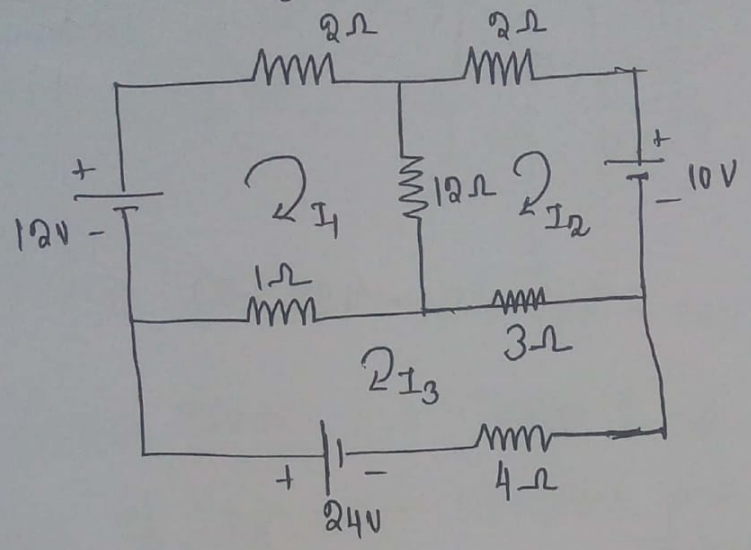

Solution: Apply KVL at Loop 1

$$2I_1 + 12(I_1 - I_2) + 1(I_1 - I_3) = 12$$

$$2I_1 + 12I_1 - 12I_2 + I_1 - I_3 = 12$$

$$15I_1 - 12I_2 - I_3 = 12 \rightarrow (1)$$

Apply KVL at Loop 2

$$2I_2 + 3(I_2 - I_3) + 12(I_2 - I_1) = -10$$

$$2I_2 + 3I_2 - 3I_3 + 12I_2 - 12I_1 = -10$$

$$-12I_1 + 17I_2 - 3I_3 = -10 \rightarrow (2)$$

Apply KVL at Loop 3

$$1(I_3 - I_1) + 3(I_3 - I_2) + 4I_3 = 24$$

$$I_3 - I_1 + 3I_3 - 3I_2 + 4I_3 = 24$$

$$-I_1 - 3I_2 + 8I_3 = 24 \rightarrow (3)$$

Scanned by CamScanner

From equation (1), (2) & (3) we get matrix form.

$$\begin{bmatrix} 15 & -12 & -1 \\ -12 & 17 & -3 \\ -1 & -3 & 8 \end{bmatrix} \begin{bmatrix} I_1 \\ I_2 \\ I_3 \end{bmatrix} = \begin{bmatrix} 12 \\ -10 \\ 24 \end{bmatrix}$$

Current through 4Ω resistor $= I_3$

Find I_3 by using Cramer's rule.

$$\Delta = \begin{bmatrix} 15 & -12 & -1 \\ -12 & 17 & -3 \\ -1 & -3 & 8 \end{bmatrix}$$

$$\Delta = 15(136-9) + 12(-96-3) - 1(36+17)$$

$$\Delta = 1905 + (-1188) - 53$$

$$\boxed{\Delta = 664}$$

$$\Delta I_3 = \begin{bmatrix} 15 & -12 & 12 \\ -12 & 17 & -10 \\ -1 & -3 & 24 \end{bmatrix}$$

$$= 15(408-30) + 12(-288-10) + 12(36+17)$$

$$= 5670 - 3576 + 636$$

$$\boxed{\Delta I_3 = 2730}$$

Scanned by CamScanner

$$I_3 = \frac{\Delta I_3}{\Delta} = \frac{2730}{664}.$$

$$\boxed{I_3 = 4.11 \text{ Amps}}$$

NODAL VOLTAGE ANALYSIS

Steps to Solve the Nodal Voltage method:

① convert all Voltage Sources to current Sources (Source Transformation)

② Select nodes. Take One of node is a reference node. n = no. of nodes

$(n-1)$ current equations are written and Solved.

③ Write the equations for each node as per KCL

④ Solve the above equations to get the nodal Voltages.

⑤ Calculate the branch currents from the Values of Voltages.

Problems.

① Using Node Voltage method, find the current in 1Ω resistance for the network shown in fig.

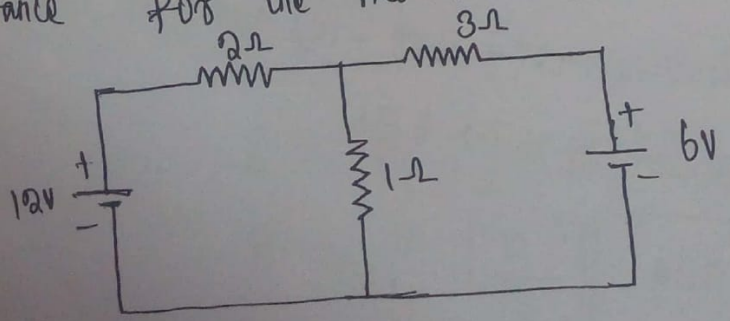

Scanned by CamScanner

Solution:

All Voltage sources are converted into their equivalent current sources.

current through source 12V, $I_1 = \frac{12}{2} = 6A$

current through sources 6V, $I_2 = \frac{6}{3} = 2A$.

∴ Circuit becomes

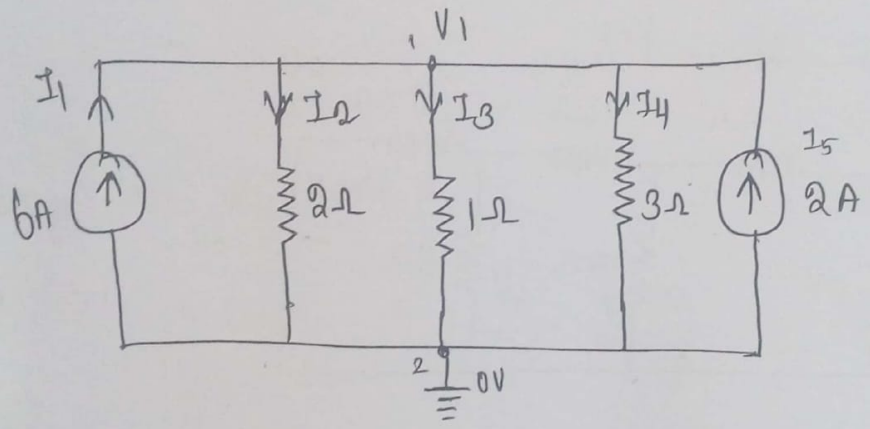

Apply KCL at node 1,

$$I_1 + I_5 = I_2 + I_3 + I_4$$

$$6 + 2 = \frac{V_1}{2} + \frac{V_1}{1} + \frac{V_1}{3}$$

$$6 + 2 = \frac{V_1}{2} + \frac{V_1}{1} + \frac{V_1}{3}$$

$$8 = V_1 \left(\frac{1}{2} + 1 + \frac{1}{3} \right)$$

$$8 = V_1 \left[\frac{3+6+2}{6} \right)$$

$$8 = V_1 \left[\frac{11}{6} \right]$$

Scanned by CamScanner

$$V_1 = \frac{8 \times 6}{11} = 4.36V$$

$$\boxed{V_1 = 4.36V}$$

Current through 1Ω resistor $I_3 = \frac{V_1}{1} = \frac{4.36}{1}$

$$\boxed{\therefore I_3 = 4.36 \text{ Amps}}$$

(12) Using nodal method find current through 8Ω resistor of fig.

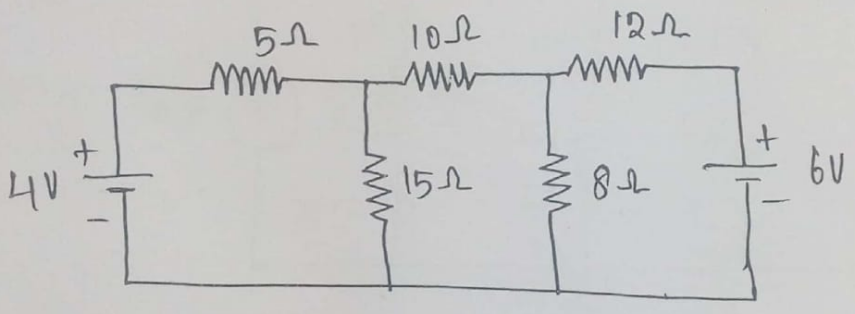

Solution:

Convert all voltage sources into equivalent current sources.

$$I_1 = \frac{4}{5} = 0.8A$$

$$I_2 = \frac{6}{12} = 0.5A$$

∴ The circuit becomes

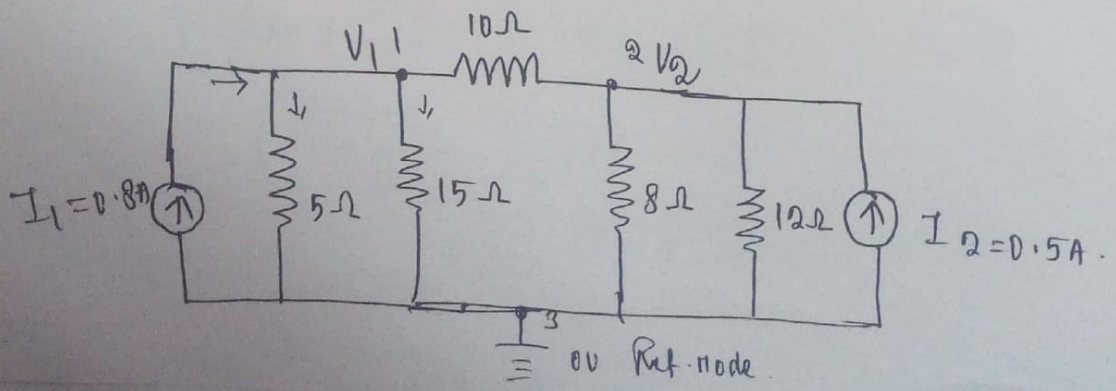

Scanned by CamScanner

Apply KCL at node 1

$$0.8 = \frac{V_1}{5} + \frac{V_1 - V_2}{10} + \frac{V_1}{15}$$

$$0.8 = \frac{V_1}{5} + \frac{V_1}{10} - \frac{V_2}{10} + \frac{V_1}{15}$$

$$0.8 = \frac{6V_1 + 3V_1 - 3V_2 + 2V_1}{30}$$

$$0.8 \times 30 = 6V_1 + 3V_1 - 3V_2 + 2V_1$$

$$24 = 11V_1 - 3V_2 \longrightarrow (1)$$

Apply KCL at node 2.

$$0.5 = \frac{V_2}{12} + \frac{V_2}{8} + \frac{V_2 - V_1}{10}$$

$$0.5 = \frac{10V_2 + 15V_2 + 12(V_2 - V_1)}{120}$$

$$0.5 \times 120 = 10V_2 + 15V_2 + 12V_2 - 12V_1$$

$$60 = -12V_1 + 37V_2 \longrightarrow (2)$$

$$11V_1 - 3V_2 = 24 \longrightarrow (1)$$

$$-12V_1 + 37V_2 = 60 \longrightarrow (2)$$

Scanned by CamScanner

Current through 8Ω resistor $I_{8\Omega} = \frac{V_2}{8}$

$= \frac{2.56}{8}$

$$\boxed{I_{8\Omega} = 0.32 \text{ Amps}}$$

Thevenin's Theorem

A linear two terminal network can be replaced by Voltage Source V_0 in series with resistance R_{TH}.

Thevenin's equivalent circuit

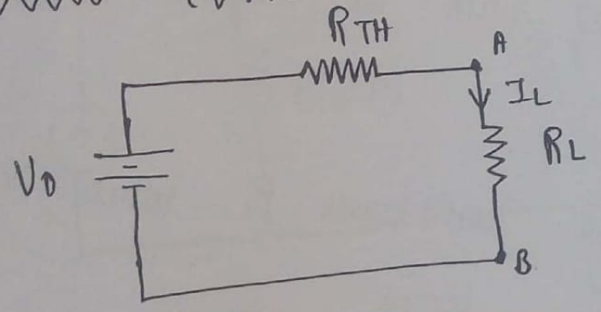

Where

V_0 – Open circuit Voltage at terminals A B

R_{TH} – Thevenin's Looking back resistances between terminals A and B

I_L – Load current through resistor R_L

$$\boxed{I_L = \frac{V_0}{R_{TH} + R_L}}$$

Scanned by CamScanner

Step by step procedure for Thevenin's equivalent circuit.

1. Remove the load resistor whose current is required.

2. Find the open circuit voltage V_0, which across the two terminals where the load is removed.

3. All the voltage sources are replaced by their internal resistances.

4. Calculate the Thevenin's looking back resistance R_{TH} from the two terminals.

5. Replace the entire network by the open circuit voltage V_0 in series with the equivalent resistance R_{TH}.

6. Connect the load resistance R_L where it was already remove.

7. Then find the current flowing through R_L

$$\boxed{I_L = \frac{V_0}{R_{TH} + R_L}}$$

Scanned by CamScanner

(1) Problems

Find the current through the 0.1 Ω resistor in the fig. using Thevenin's method.

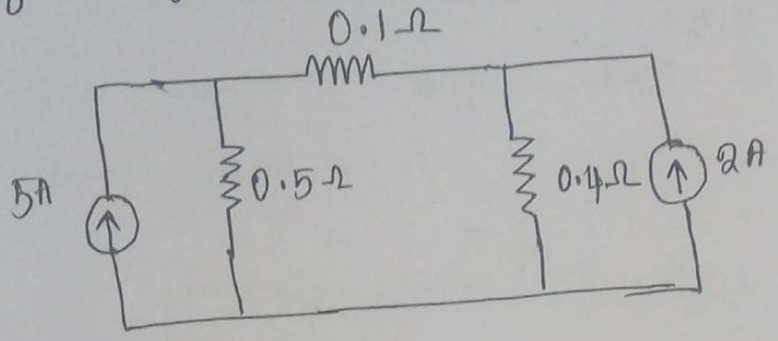

Solution

Step 1 : To find V_0 = ?

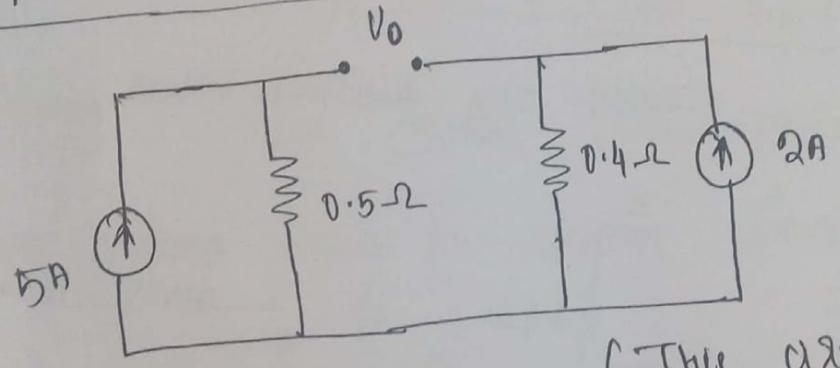

$V_1 = 5 \times 0.5 = 2.5V$

$V_2 = 2 \times 0.4 = 0.8V$

(This circuit is reduced by using Source Transformation].

[If we need use Transformation Voltage Source to current Source (or) current Source to Voltage Source)

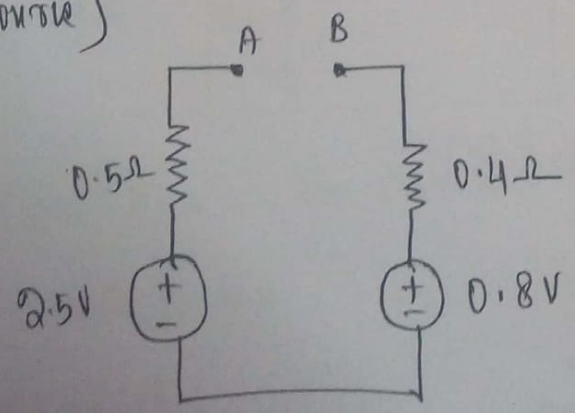

Scanned by CamScanner

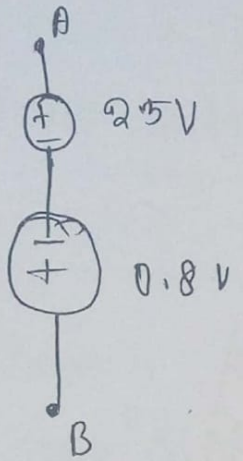

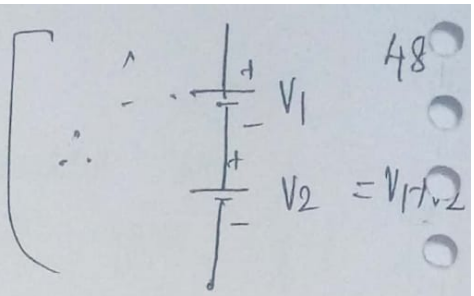

$$V_0 = 2.5V - 0.8V$$

$$\boxed{V_0 = 1.7V}$$

Step 2 : To Find R_{TH} = ?

Consider only Resistance Values.

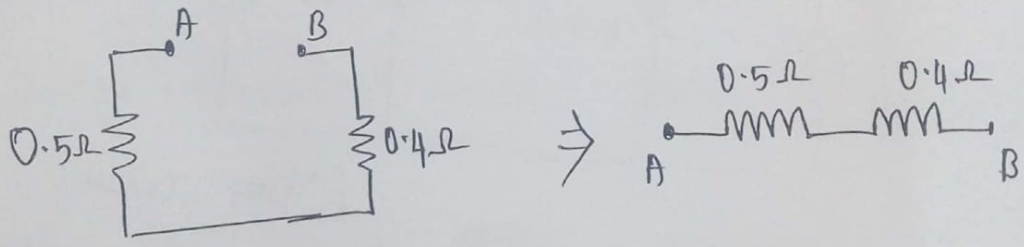

$$\boxed{R_{TH} = 0.9\Omega}$$

Step 3 : To find I_L = ?

Thevenin's equivalent circuit.

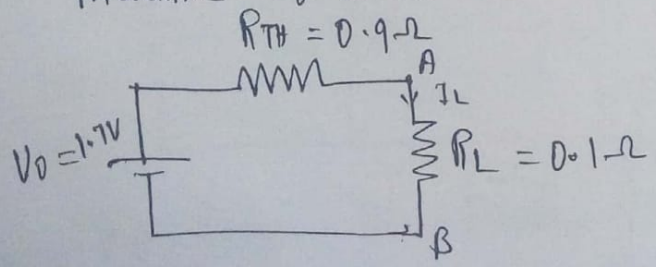

$$I_L = \frac{V_0}{R_{TH} + R_L}$$

Scanned by CamScanner

$$I_L = \frac{1.7}{0.9+0.1}$$

$$\boxed{I_L = 1.7 \text{ Amps}}$$

(2) Using Thevenin's theorem find the current I_L in the circuit shown in fig.

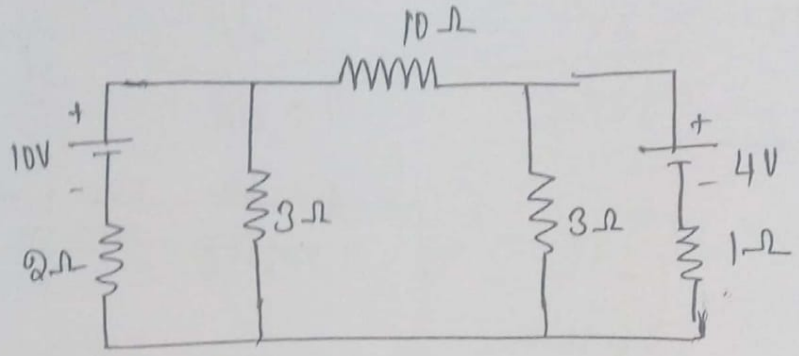

Solution: Use Source Transformation.

(1) Voltage Source to current Source.

$$I_1 = \frac{V}{R} = \frac{10}{2} = 5A$$

$$I_2 = \frac{V}{R} = \frac{4}{1} = 4A.$$

Remove R_L

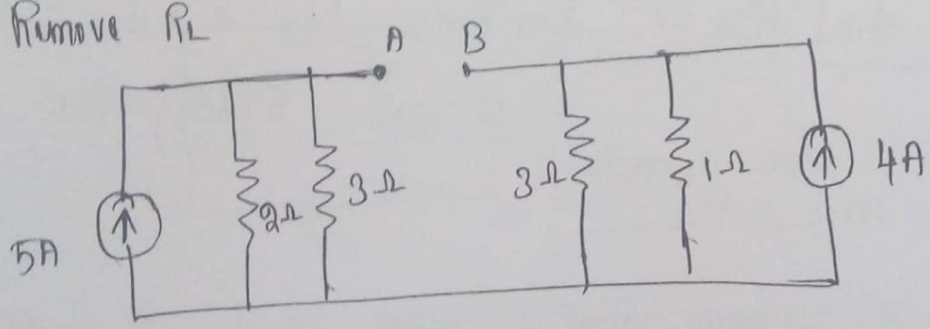

Now Reduce the Parallel resistances.

$$3\Omega \parallel 2\Omega \Rightarrow \frac{3\times2}{3+2} = 1.2\Omega$$

$$3\Omega \parallel 1\Omega \Rightarrow \frac{3\times1}{3+1} = \frac{3}{4} = 0.75\Omega$$

Scanned by CamScanner

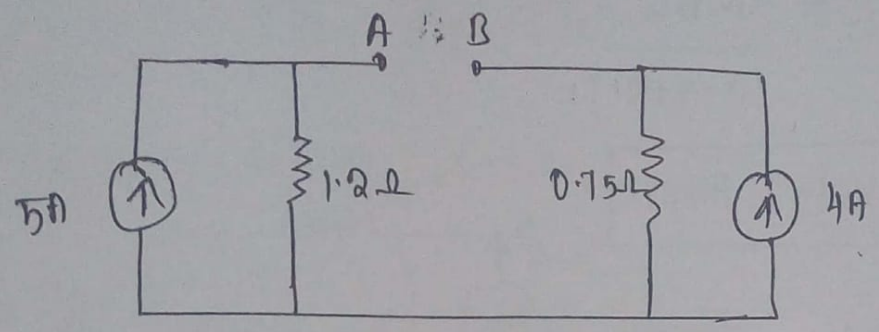

$V_1 = IR = 5 \times 1.2 = 6V$

$V_2 = 4 \times 0.75 = 3V$

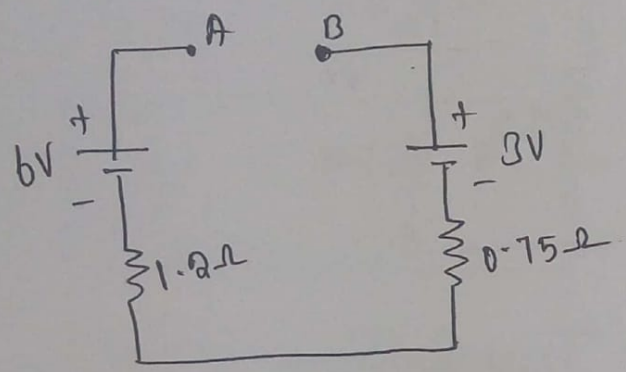

$\Rightarrow$

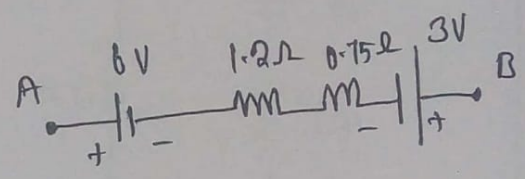

Step 1

To find $V_0 = ?$ $\quad V_0 = V_{AB}$ = Voltage across A & B Terminal.

$V_0 = 6 - 3 = 3V$

$$\boxed{V_0 = 3V}$$

Step 2. To find $R_{TH} = ?$ Resistance b/w A & B $= R_{AB}$

$R_{TH} = R_{AB}$.

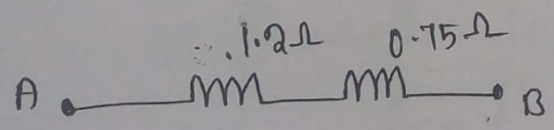

$R_{TH} = 1.2 + 0.75$

$$\boxed{R_{TH} = 1.95\,\Omega}$$

Scanned by CamScanner

Step 3 To find $I_L = ?$

Equivalent circuit

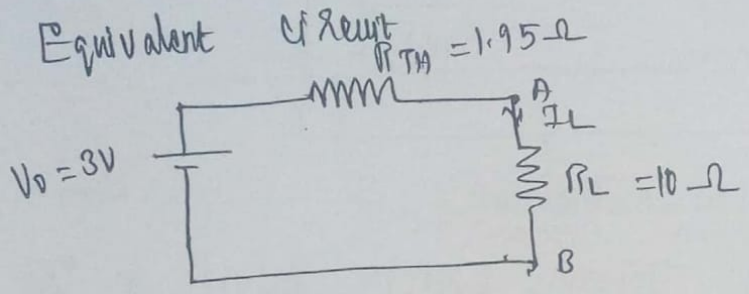

$$I_L = \frac{V_0}{R_{TH} + R_L} = \frac{3}{1.95 + 10}$$

$$\boxed{I_L = 0.251\ A}$$

Norton's Theorem.

Statement :- Any two terminals network can be reduced to a current source in parallel with a resistor.

Equivalent circuit

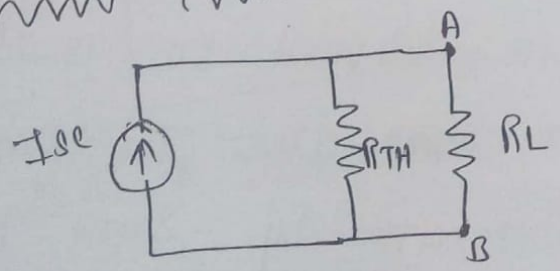

where I_{sc} = Short circuit current at AB

R_{TH} = Thevenin's looking back resistance.

Scanned by CamScanner

$$I_L = I_{sc} \times \frac{R_{TH}}{R_{TH}+R_L}$$

Steps to Solve Norton's Theorem :-

Norton's theorem can be solved in the same way as Thevenin's theorem. After obtaining equivalent circuit V_0 & R_{TH}. the Norton's equivalent circuit can be obtained by simple source transformation

Problems :

① In the circuit shown in fig. determine the Power delivered to 15Ω resistance using Norton's theorem.

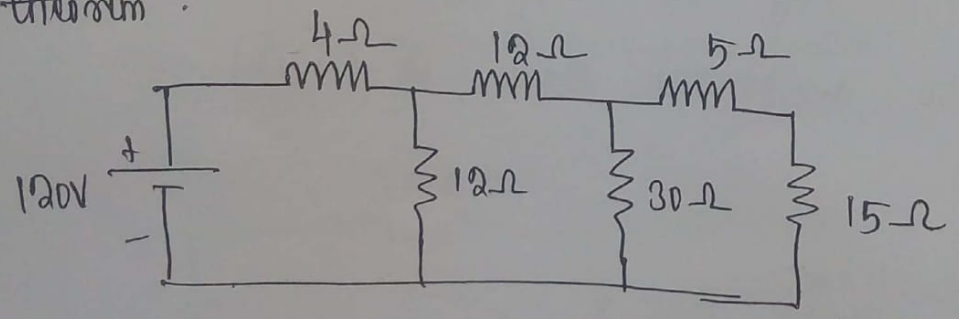

Solution : The Power delivered to 15Ω resistance is to be determined, open circuit the particular branch. Reduce the circuit by source Transformation and resistance reduction.

Scanned by CamScanner

$$I = \frac{V}{R} = \frac{120}{4} = 30\ A$$

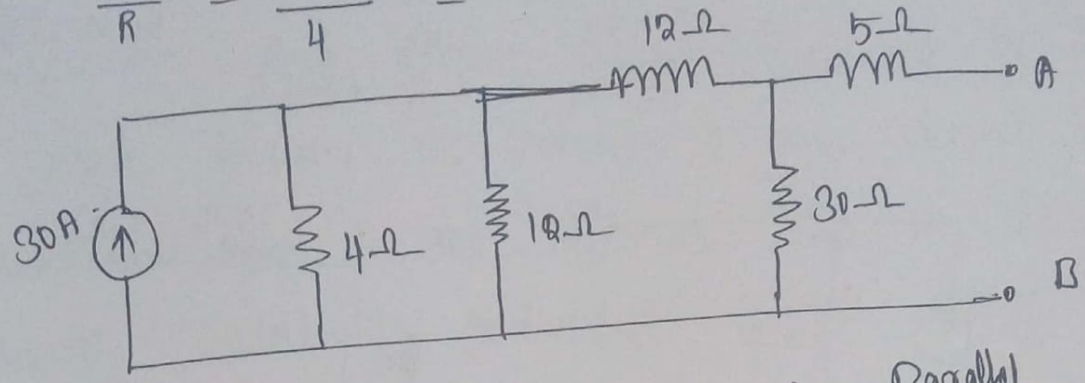

The resistors 4Ω & 12Ω are in Parallel

$$R = \frac{4 \times 12}{4+12} = 3\Omega$$

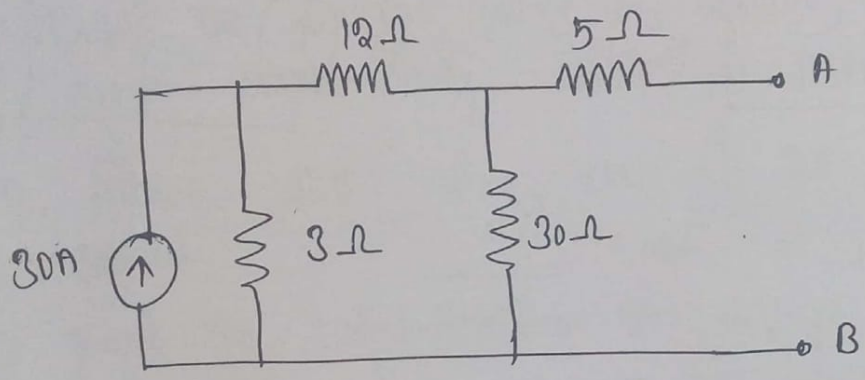

$V = IR = 30 \times 3 = 90V$

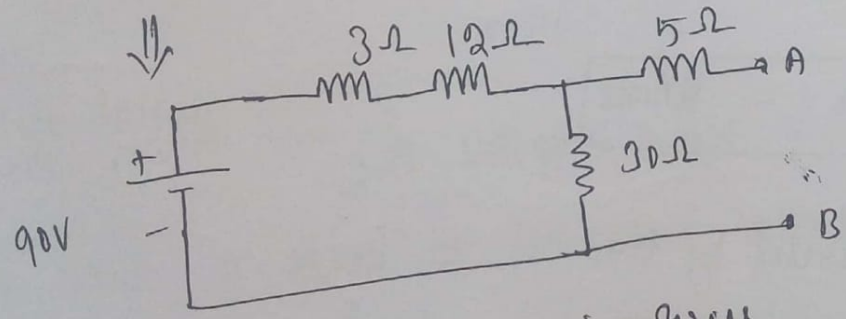

3Ω & 12Ω are in series.

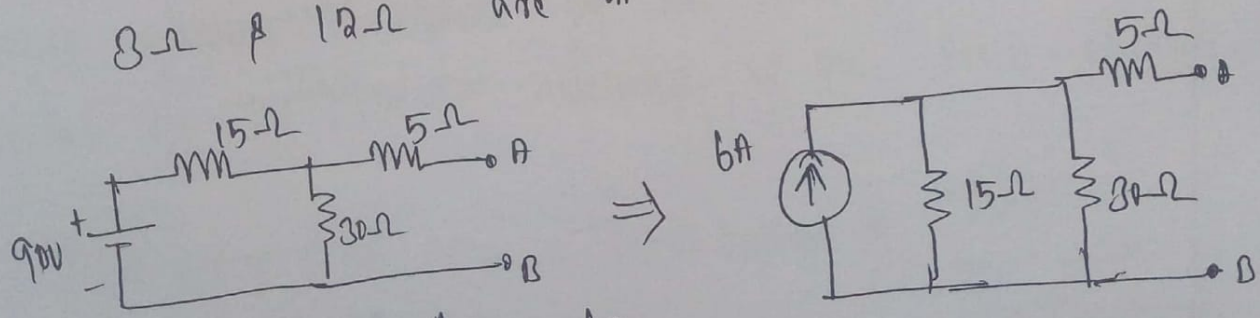

$I = 90/15 = 6A$

15Ω and 30Ω are in Parallel.

$$= \frac{15 \times 30}{15+30} = \frac{450}{45} = 10\,\Omega$$

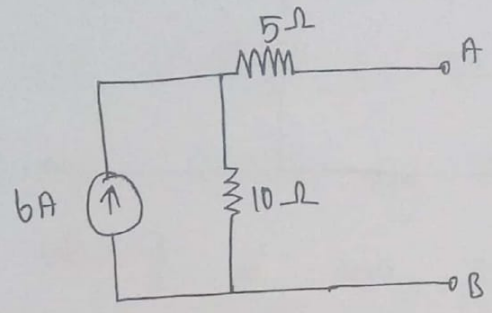

⇒

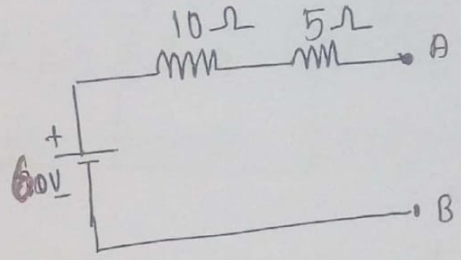

$V = 6 \times 10 = 60V$

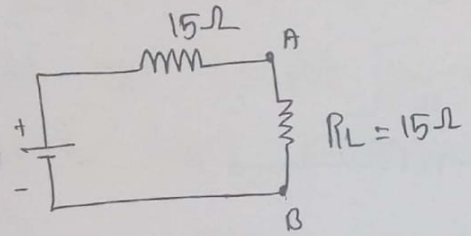

⇒

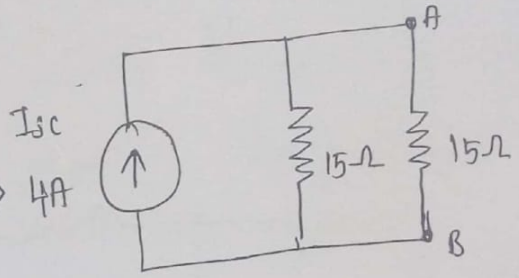

$I = \frac{60}{15} = 4A$

$$I_L = I_{sc} \times \frac{R_{TH}}{R_{TH}+R_L}$$

$$= 4 \times \frac{15}{15+15}$$

$$\boxed{I_L = 2\text{ Amps}}$$

Power delivered by load $= I_L^2 R_L$

$= (2)^2 \times 15$

$= 60$ watts.

Scanned by CamScanner

Superposition Theorem

Statement: Any electric circuit energised by two (or) more sources, the response in any element in the network is equal to the algebraic sum of the responses caused by individual sources acting separately.

Steps to apply Superposition principle:

1. Turn off all independent sources except one source, Find the output [voltage (or) current] due to that active source using Nodal (or) Mesh analysis.
2. Repeat step 1 for each of the other independent sources.
3. Find the total current (or) voltage by adding all the contributions due to the independent sources.

Voltage division rule: A voltage across a resistor in a series circuit is equal to the total voltage across the series elements multiplied by the value of that resistor divided by the total resistance of the series elements.

$$\text{Total Voltage drop (across resistor)} = \text{Total Voltage} \times \frac{R_{AB}}{\text{Total Resistance}}$$

R_{AB} = Branch resistance

Scanned by CamScanner

Current Division rule (CDR)

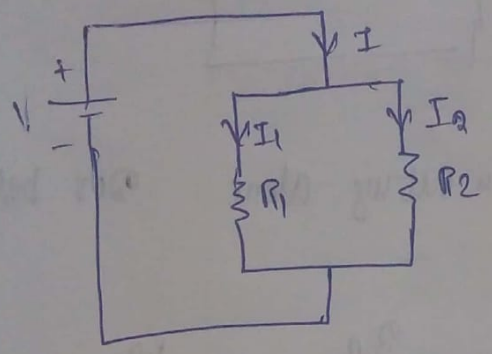

$$\text{Current through any resistor} = \text{Total current} \times \frac{\text{Opposite Resistance}}{\text{Opposite Resistance} + \text{Load resistance}}$$

$$I_1 = I \times \frac{R_2}{R_1+R_2}$$

$$I_2 = I \times \frac{R_1}{R_1+R_2}$$

Scanned by CamScanner

Problems.

① Using Super position theorem find the current through 3Ω resistance in the circuit shown.

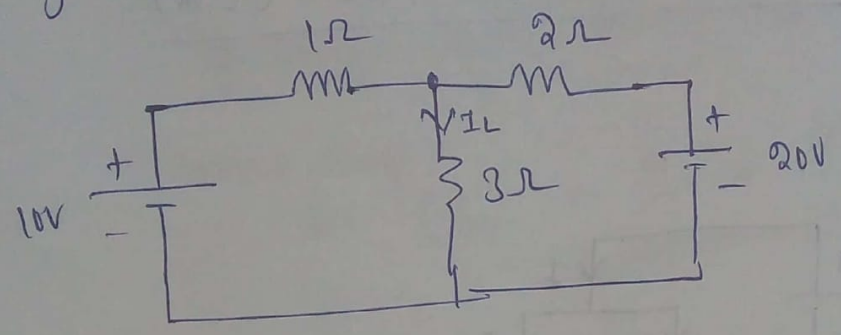

Step 1. 10V battery is acting alone. 20V battery is short circuited.

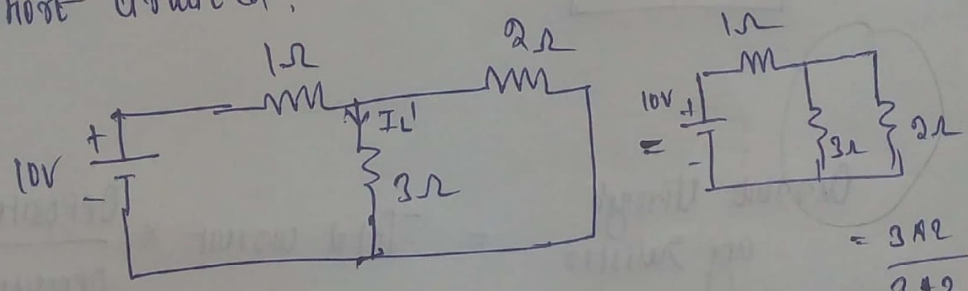

$= \frac{3 \times 2}{3+2}$

$= \frac{6}{5} = 1.2\Omega$

$I_T = ?$

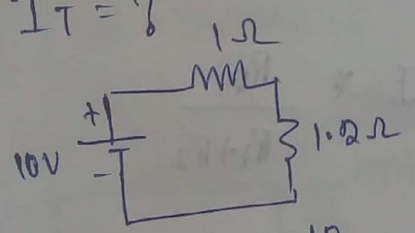

$$I_T = \frac{10}{1+1.2} = \frac{10}{2.2} = 4.55A.$$

$$\boxed{I_T = 4.55A}$$

Scanned by CamScanner

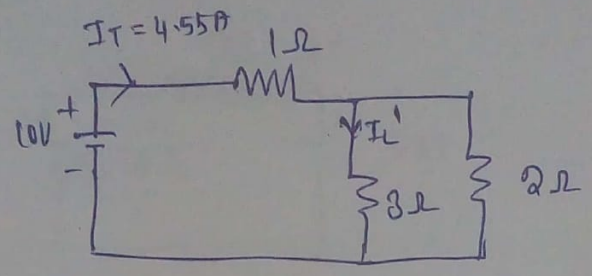

By using current division rule.

$$\text{Current through } 3\Omega \ (I_L') = I_T \times \frac{\text{Opposite Resistance}}{\text{Opposite Resistance} + \text{Load Resistance}}$$

$$I_L' = 4.55 \times \frac{2}{3+2}$$

$$I_L' = \frac{9.1}{5} = 1.82$$

$$\boxed{I_L' = 1.82 \text{ Amps}}$$

Step 2. 20V battery is acting alone.

10V battery is short circuited

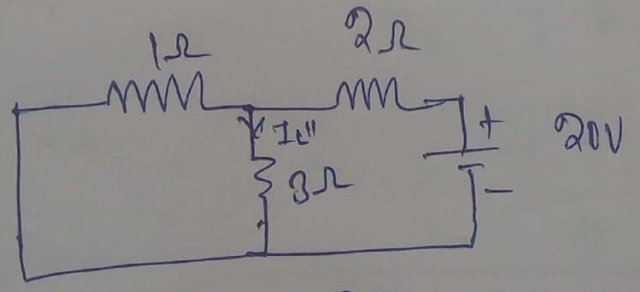

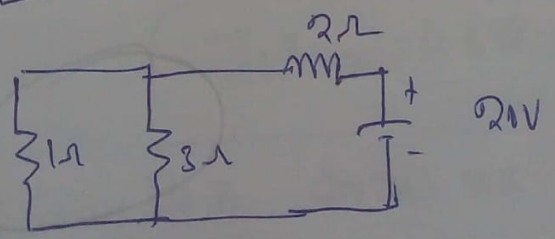

$$= \frac{3 \times 1}{3+1} = \frac{3}{4} = 0.75\Omega$$

Scanned by CamScanner

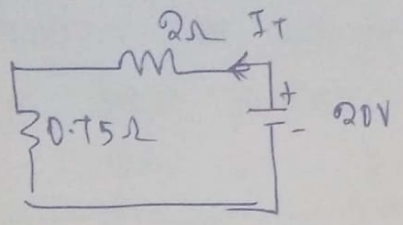

$$I_T = \frac{20}{2+0.75} = \frac{20}{2.75}$$

$$I_T = \frac{20}{2.75} = 7.27$$

$$\boxed{I_T = 7.27 \text{ Amps}}$$

By using current division rule.

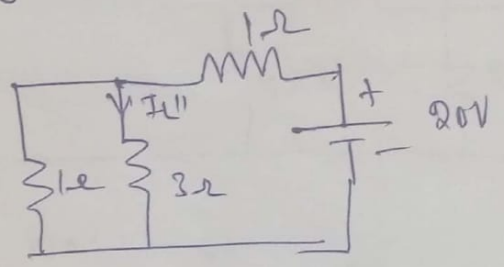

current through 3Ω resistor (I_L'') $= I_T \times \frac{\text{Opposite Resistance}}{\text{Opp. Resistance} + R_L}$

$$= 7.27 \times \frac{1}{1+3}$$

$$= \frac{7.27}{4} = 1.8175$$

$$\boxed{I_L'' = 1.82 \text{ Amps}}$$

Step3 Both sources are acting

current through (I_L) 3Ω resistor $= I_L' + I_L''$

$= 1.82 + 1.82$

$= 3.64 A$

$$\boxed{I_L = 3.64 A}$$

Scanned by CamScanner

(2) Determine the Voltage across the 4Ω resistor by using Super position theorem.

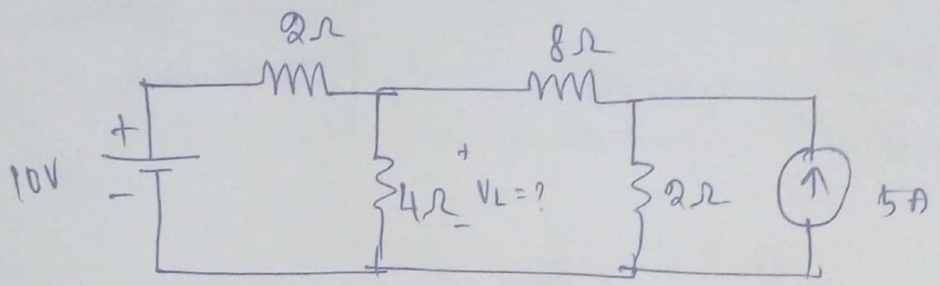

Step 1 10V battery is acting alone.
5A current source is open circuited.

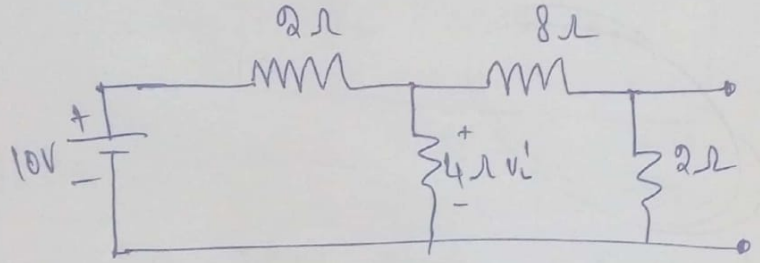

8Ω and 2Ω series. =10Ω

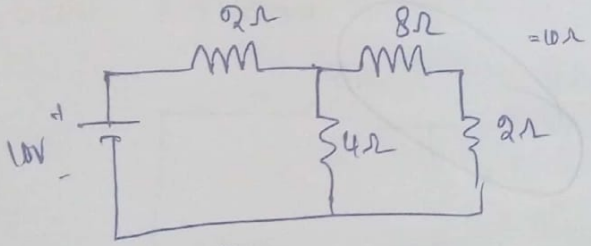

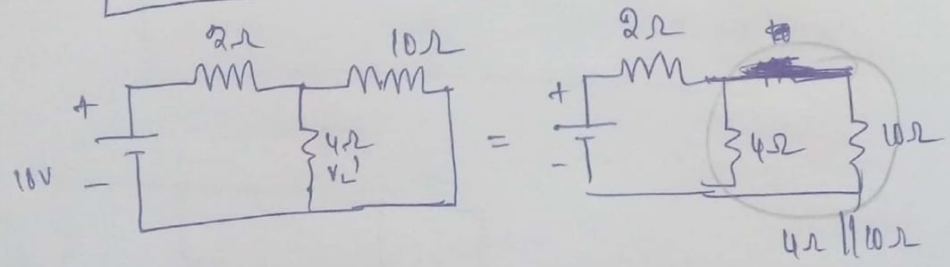

$$\frac{4 \times 10}{4+10} = \frac{40}{14} = 2.86\Omega$$

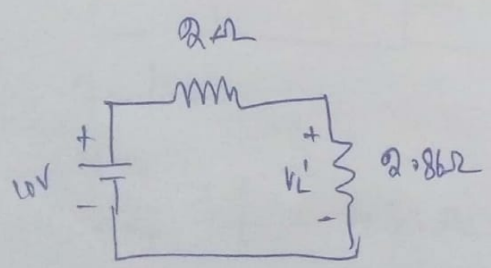

Total Voltage = 10V

Scanned by CamScanner

Apply Voltage division rule.

Voltage across 4Ω resistor (V_L') = Total voltage × $\frac{\text{Branch resistance}}{\text{Total resistance}}$

$$= 10 \times \frac{2.86}{2+2.86}$$

$$= \frac{28.6}{4.86} = 5.88V$$

$$\boxed{V_L' = 5.88V}$$

Step 2:

5A acting alone and 10V battery is short circuited.

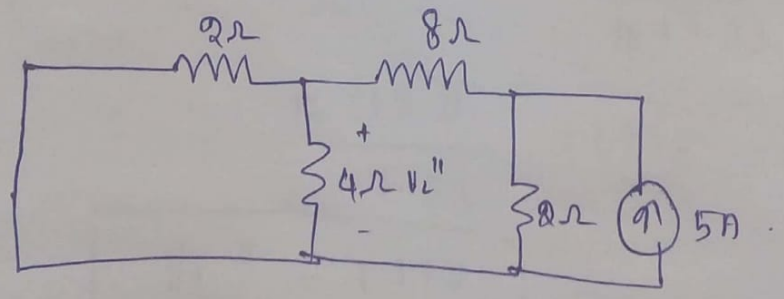

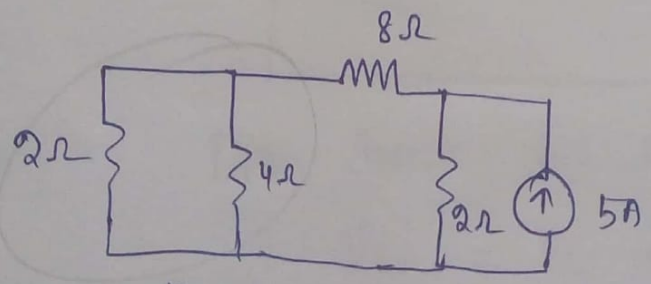

2Ω || 4Ω

$$\frac{2 \times 4}{2+4} = \frac{8}{6} = 1.33\Omega$$

Scanned by CamScanner

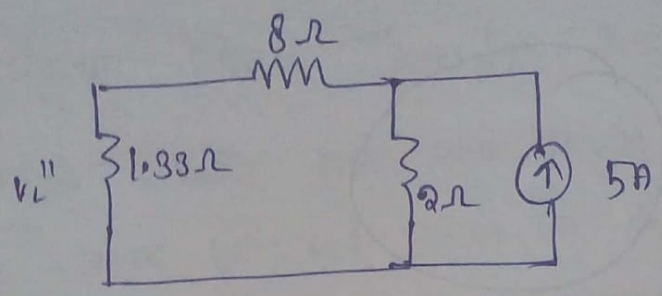

$V = 5 \times 2 = 10V$

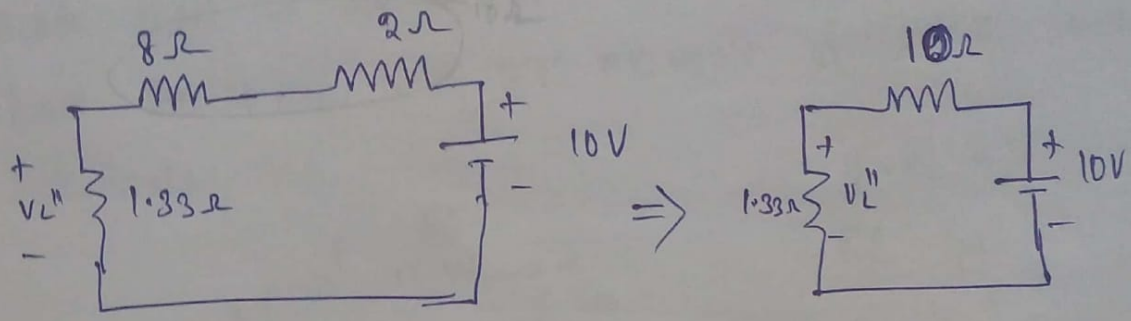

Apply Voltage division rule.

$$\text{Voltage across } 4\Omega \text{ resistor } (V_L'') = \text{Total Voltage} \times \frac{\text{Branch Resistance}}{\text{Total Resistance}}$$

$$= 10 \times \frac{1.33}{10 + 1.33}$$

$$= \frac{13.3}{11.33} = 1.17V$$

$$\boxed{V_L'' = 1.17V}$$

<u>Step3</u> Both Sources are acting

$$V_L = V_L' + V_L''$$

$$= 5.88 + 1.17$$

Voltage across 4Ω resistor.

$$\boxed{V_L = 7.05V}$$

Scanned by CamScanner

Maximum Power Transfer Theorem

In dc circuits maximum power is transferred from a source to load when the load resistance is made equal to the internal resistance or looking back resistance of the network from the load terminals.

$V = V_0$ = Thevenin's open circuit voltage

$R_i = R_{th}$ ↳ Thevenin's resistance

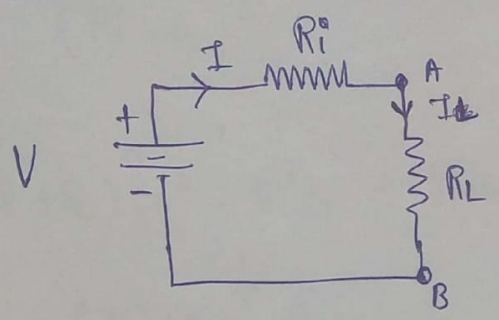

$I = I_L$

An electric circuit can be replaced by a Thevenin's equivalent circuit consisting of Thevenin's voltage series with Thevenin's looking back resistance $R_{TH} = R_i$ as shown in fig.

Circuit current $I_L = \dfrac{V}{R_i + R_L}$

Power consumed by the load $P_L = I_L^2 R_L$

$$P_L = \left(\frac{V}{R_i + R_L}\right)^2 \times R_L = \frac{V^2 R_L}{(R_i + R_L)^2}$$

$$\boxed{P_L = \frac{V^2 R_L}{(R_i + R_L)^2}}$$

For maximum power $\dfrac{dP_L}{dR_L} = 0$

Scanned by CamScanner

For maximum Power $\frac{dP_L}{dR_L} = 0$

$$\frac{d}{dR_L}\left(\frac{V^2 R_L}{(R_i+R_L)^2}\right) = 0$$

$$\frac{(R_i+R_L)^2 V^2 - V^2 R_L \, 2(R_i+R_L)}{(R_i+R_L)^4} = 0$$

$u = V^2 R_L$

$du = V^2$

$v = (R_i+R_L)^2$

$dv = 2(R_i+R_L)$

$d\left(\frac{u}{v}\right) = \frac{v\,du - u\,dv}{v^2}$

$$(R_i+R_L)^2 V^2 - V^2 R_L \, 2(R_i+R_L) = 0$$

$$(R_i+R_L)^{\cancel{2}} \cancel{V^2} = \cancel{V^2} R_L \, 2\cancel{(R_i+R_L)}$$

$$(R_i+R_L) = 2R_L$$

$$R_i = 2R_L - R_L$$

$$\boxed{R_i = R_L}$$

For maximum power condition

$$\boxed{R_i = R_L}$$

Maximum Power $P_{max} = I_L^2 R_L$

$$= \left(\frac{V}{(R_i+R_L)}\right)^2 R_L$$

$$= \left(\frac{V^2}{(R_L+R_L)^2}\right) \cdot R_L = \frac{V^2}{(2R_L)^2} \cdot R_L$$

$$= \frac{V^2 R_L}{4R_L^2} = \frac{V^2}{4R_L}$$

Scanned by CamScanner

$$P_{max} = \frac{V^2}{4R_L} \text{ watts}$$

Problem (1)

Calculate the value of the load resistance for maximum power transfered from the circuit shown in fig. Also find the maximum power = ?

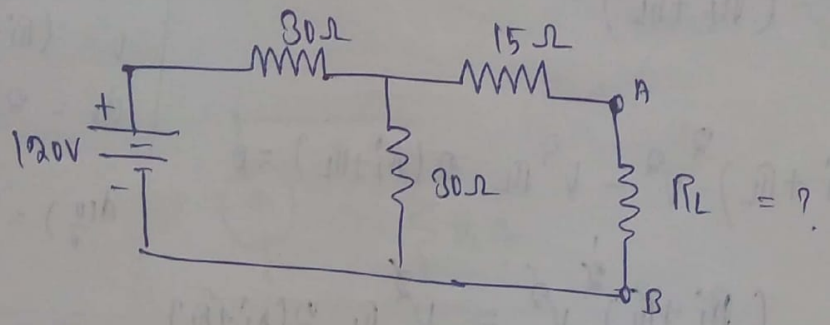

Solution:

Thevenin's equivalent circuit

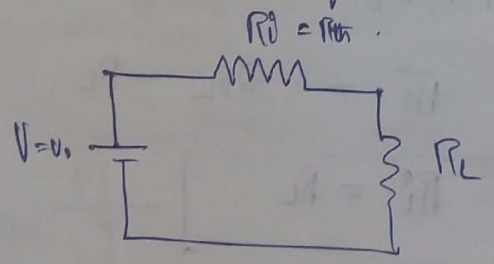

$V = V_0$ = Open circuit voltage at AB

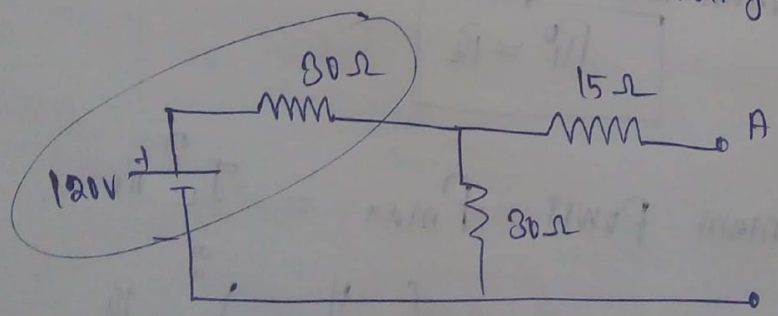

$$I = \frac{V}{R} = \frac{120}{30} = 4A$$

Scanned by CamScanner

Find $V_0 = ?$ $R_{Th} = ?$

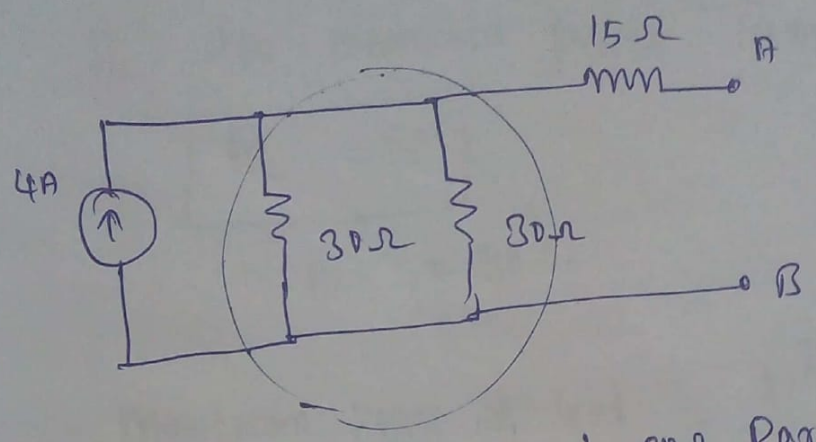

30Ω and 30Ω Parallel

$$= \frac{30 \times 30}{30+30} = \frac{900}{60} = 15\,\Omega$$

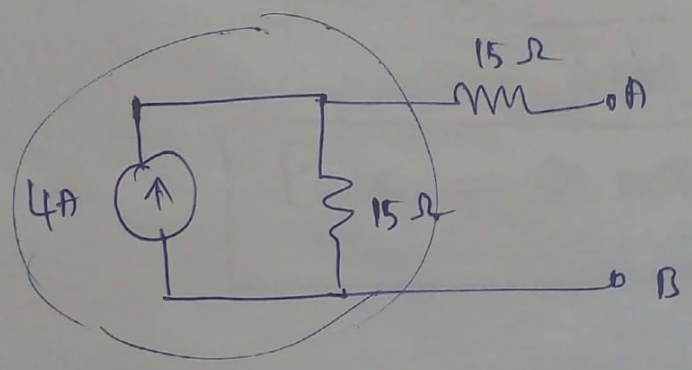

$V = IR$

$V = 4 \times 15 = 60V$

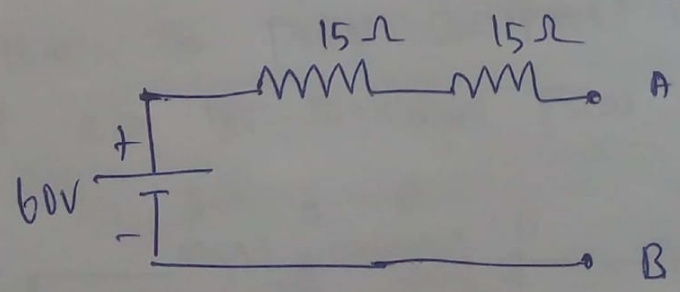

$$\boxed{V_0 = 60V}$$

$R_{TH} = 15 + 15$

$$\boxed{R_{Th} = 30\,\Omega}$$

Scanned by CamScanner

$R_i = R_{th}$

R_L for maximum Power Transfer $= R_i$

$$\boxed{R_L = R_i}$$

$R_L = 30\Omega$

Maximum Power at load $= \dfrac{V^2}{4R_L}$

$= \dfrac{60^2}{4 \times 30} = \dfrac{3600}{120}$

$$\boxed{P_{max} = 30 \text{ watts}}$$

Problem: 2. In the circuit shown below, Find the resistance R to be connected b/w A & B so that the power dissipated in this maximum. Find also the maximum power.

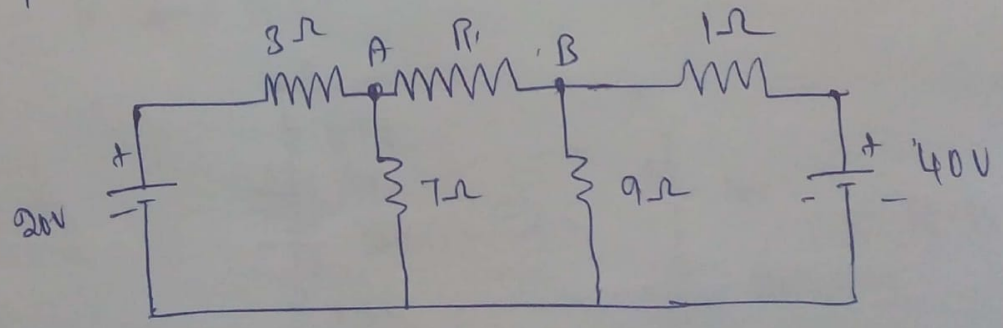

Remove R

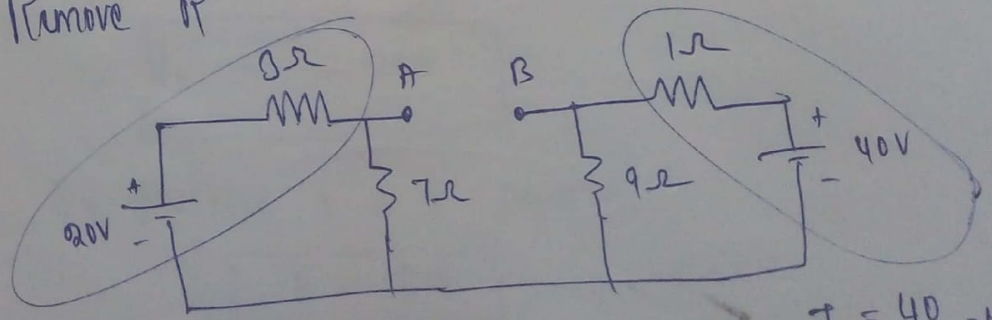

$I = \dfrac{V}{R} = \dfrac{20}{3} = 6.67A$

$I = \dfrac{40}{1} = 40A$

Scanned by CamScanner

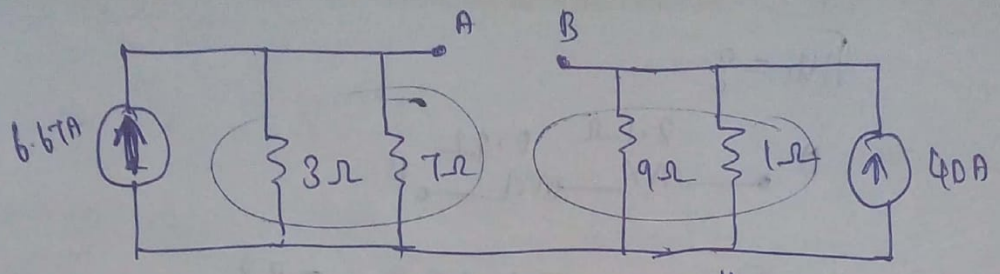

$$\frac{3 \times 7}{3+7} = \frac{21}{10} = 2.1\Omega$$

$$\frac{9 \times 1}{9+1} = \frac{9}{10} = 0.9\Omega$$

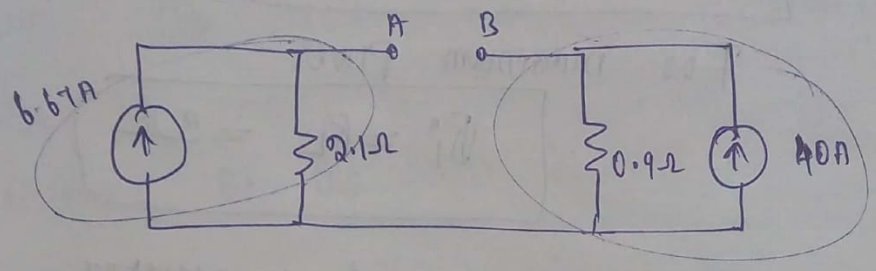

$V = IR$

$= 6.67 \times 2.1$

$V = 14V$

$V = 0.9 \times 40$

$V = 36V$

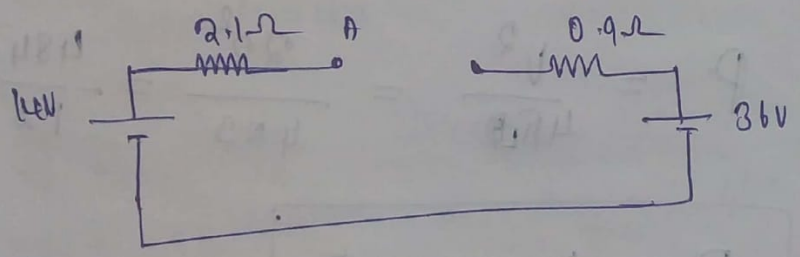

To find $V_0 = ?$

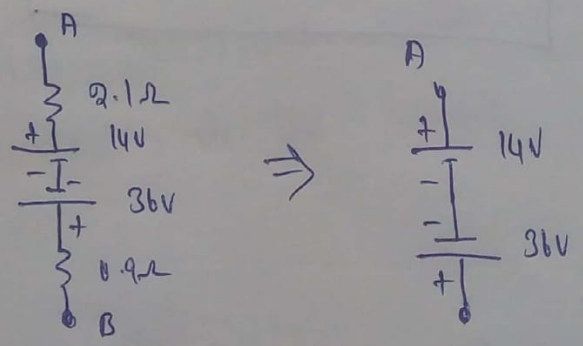

$= 14 - 36$

$$\boxed{V_0 = -22V}$$

B is positive & A is negative

$$\boxed{V = 22V}$$

Scanned by CamScanner

$R_{th} = ?$

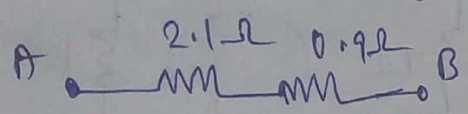

$R_{th} = 2.1 + 0.9 = 3\Omega$

$$\boxed{R_{th} = R_i = 3\Omega}$$

For maximum power

$$\boxed{R_i = R_L = 3\Omega}$$

Power wasted in the load resistor -

$$= \frac{V^2}{4R_L} = 40.33 \text{ watts}$$

$$P = \frac{V^2}{4R_L} = \frac{22^2}{4 \times 3} = \frac{484}{12}$$

$$\boxed{P = 40.33 \text{ watts}}$$

Scanned by CamScanner

2 marks

1. Voltage divisio rule:

A Voltage across a resistor in a series circuit is equal to the total voltage across the series elements multiplied by the value of that resistor divided by the total resistance of the series elements.

$$\text{Voltage drop across resistor} = \text{Total voltage} \times \frac{R_{AB}}{\text{Total Resistance}}$$

2. State current division rule:

Ratio of the opposite parallel branch resistance to the total resistance value, multiplied by the total current in the circuit.

eg.

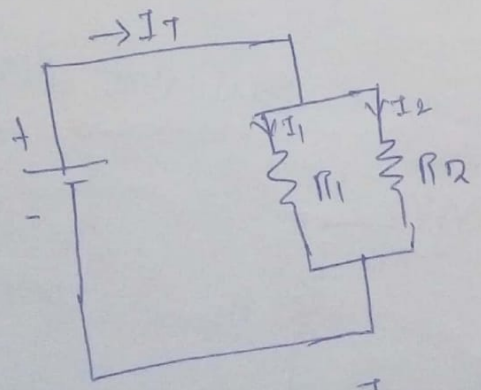

$$I = \text{Total current} \times \frac{\text{Opposite Resistance}}{\text{Total Resistance}}$$

$$I_1 = I_T \cdot \frac{R_2}{R_1+R_2}$$

$$I_2 = I_T \cdot \frac{R_2}{R_1+R_2}$$

From the above fig.

Scanned by CamScanner

(3) What is mesh current analysis

Mesh analysis is one of the basic technique used for finding current flowing through the loop in a network. If there exists current source in a circuit. Then it should be converted in to equivalent voltage source.

(4) What is nodal analysis?

Nodal analysis is one of the basic technique used to finding for voltage drop across the nodes in a given circuit. If there exists voltage sources in the given circuit. Then it can to be converted in to equivalent current sources.

(5) Define mesh.

A mesh is defined as a loop which does not contain any other loops within it.

(6) Draw the thevenin's equivalent circuit.

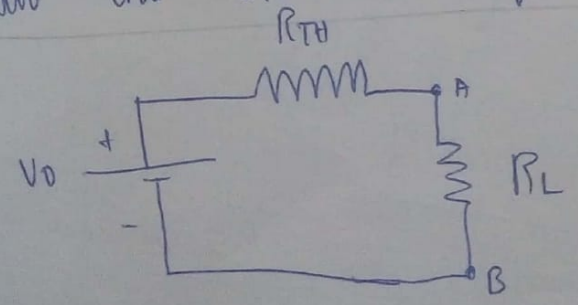

Scanned by CamScanner

$$I_L = \frac{V_0}{R_{TH} + R_L}$$

Where I_L — Load current.

R_L — Load resistor

V_0 = open circuit voltage across A & B Terminals.

R_{TH} — Thevenin's Resistance.

7. What is the limitation of Superposition theorem?

1. Super position can be applied to linear network only.
2. The network should satisfy to homogenity principle.

Additional problem of Nodal Voltage method.

1. Find the branch current using Nodal Voltage method.

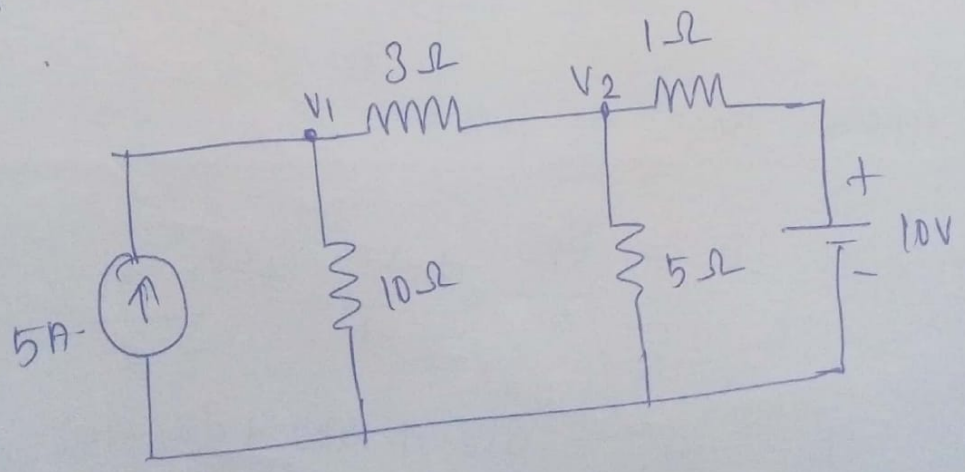

Scanned by CamScanner

Solution: Convert Voltage Source into current Source

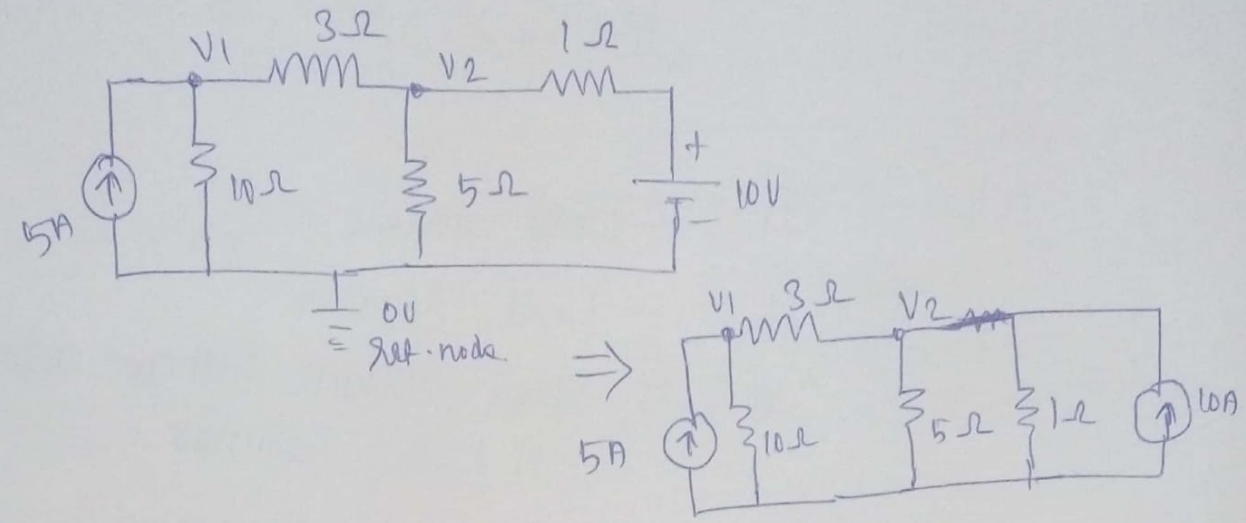

Apply KCL at node 1

$$5 = \frac{V_1}{10} + \frac{V_1 - V_2}{3}$$

$$5 = \frac{3V_1 + 10(V_1 - V_2)}{30}$$

$$5 = \frac{3V_1 + 10V_1 - 10V_2}{30}$$

$$150 = 13V_1 - 10V_2$$

$$13V_1 - 10V_2 = 150 \rightarrow (1)$$

Apply KCL at node 2

$$10 = \frac{V_2}{5} + \frac{V_2}{1} + \frac{V_2 - V_1}{3}$$

$$10 = \frac{3V_2 + 15V_2 + 5(V_2 - V_1)}{15}$$

Scanned by CamScanner

$$150 = 3V_2 + 15V_2 + 5V_2 - 5V_1$$

$$-5V_1 + 23V_2 = 150 \rightarrow (2)$$

$$\begin{bmatrix} 13 & -10 \\ -5 & 23 \end{bmatrix} \begin{bmatrix} V_1 \\ V_2 \end{bmatrix} = \begin{bmatrix} 150 \\ 150 \end{bmatrix}$$

$$\Delta = 299 - 50$$

$$\boxed{\Delta = 249}$$

$$\Delta V_1 = \begin{bmatrix} 150 & -10 \\ 150 & 23 \end{bmatrix}$$

$$= 3450 + 1500$$

$$\boxed{\Delta V_1 = 4950}$$

$$\Delta V_2 = \begin{bmatrix} 13 & 150 \\ -5 & 150 \end{bmatrix} = 1950 + 750$$

$$\boxed{\Delta V_2 = 2700}$$

$$V_1 = \frac{\Delta V_1}{\Delta} = \frac{4950}{249} = 19.88\,V$$

Scanned by CamScanner

$$\boxed{V_1 = 19.88V}$$

$$V_2 = \frac{\Delta V_2}{\Delta} = \frac{2700}{249} = 10.84V$$

$$\boxed{V_2 = 10.84V}$$

$$I_{10\Omega} = \frac{V_1}{10} = \frac{19.88}{10} = 1.98 \text{ Amps}$$

$$I_{3\Omega} = \frac{V_1 - V_2}{3} = \frac{19.88 - 10.84}{3} = 3 \text{ Amps.}$$

$$I_{1\Omega} = \frac{V_2 - 10}{1} = \frac{10.84 - 10}{1} = 0.84 \text{ Amps}$$

$$I_{5\Omega} = \frac{V_2}{5} = \frac{10.84}{5} = 2.168 \text{ Amps}$$

Scanned by CamScanner

UNIT - II

AC CIRCUITS

SERIES CIRCUITS:

SINUSOIDAL VOLTAGE AND CURRENT:

* COMMERCIAL ALTERNATORS produce Sinusoidal Voltage. (ie) alternating Voltage is a sinewave.

* A sinusoidal Voltage can be produced by rotating a coil in a uniform magnetic field.

The sinusoidal alternating Voltage can be expressed by the equation.

$$\boxed{v = V_m \sin \omega t} \rightarrow (1)$$

v = Instantaneous value of alternating Voltage

V_m = Maximum value of alternating Voltage.

ω = angular Velocity of the coil

Sinusoidal Voltage always produces sinusoidal currents.

∴ a sinusoidal current can be expressed in the same way as Voltage.

$$\boxed{i = I_m \sin \omega t} \rightarrow (1)$$

i = Instantaneous value of alternating current.

I_m = Maximum value of alternating current.

Scanned by CamScanner

$$V = V_m \sin \omega t$$
$$i = I_m \sin \omega t$$

(or)

$$V = V_m \sin \theta$$
$$i = I_m \sin \theta$$

$$\theta = \omega t$$

Alternating quantity:

It is one in which the magnitude and direction change with respect to time.

Wave form: The shape of the curve obtained by plotting the instantaneous values of voltage (or) current Vs Time is called wave form.

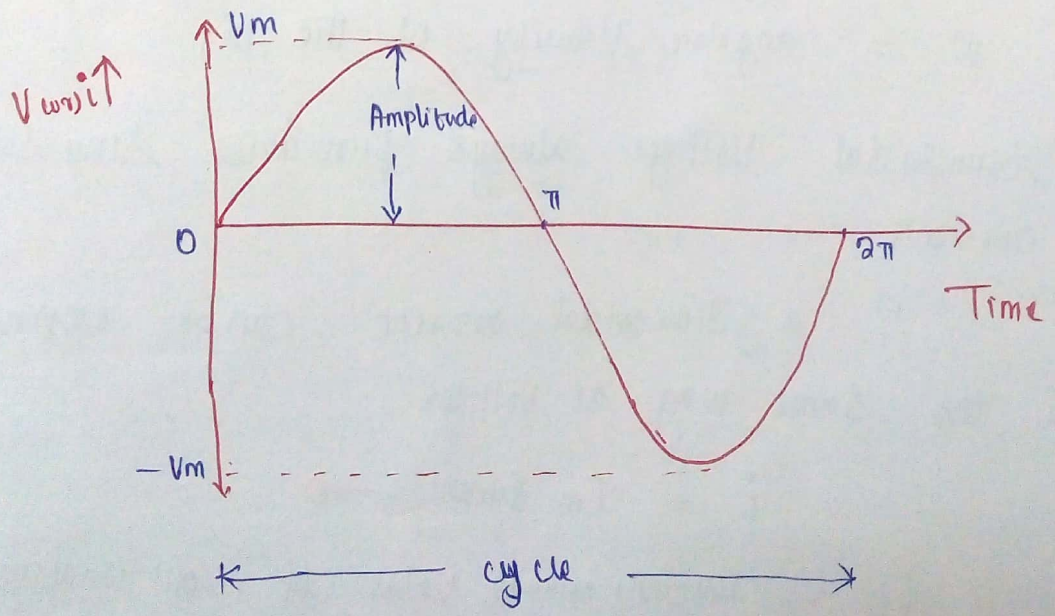

Scanned by CamScanner

Instantaneous Value: The Value of an alternating quantity at any instant is called instantaneous Value.

Cycle: One Complete set of positive and negative Values of an alternating quantity is called cycle.

Time Period (T). The time taken to complete one cycle of an alternating quantity is called its Time period (T).

Frequency (f): The number of cycles made by an alternating quantity Per Second is called its frequency.

unit = Herz (Hz).

Amplitude (or) Peak Value: The maximum +ve (or) -ve Value of an alternating quantity is called amplitude (or) Peak Value.

Average Value: This is the average of the Instantaneous Values of an alternating quantity over one complete cycle of the wave.

Scanned by CamScanner

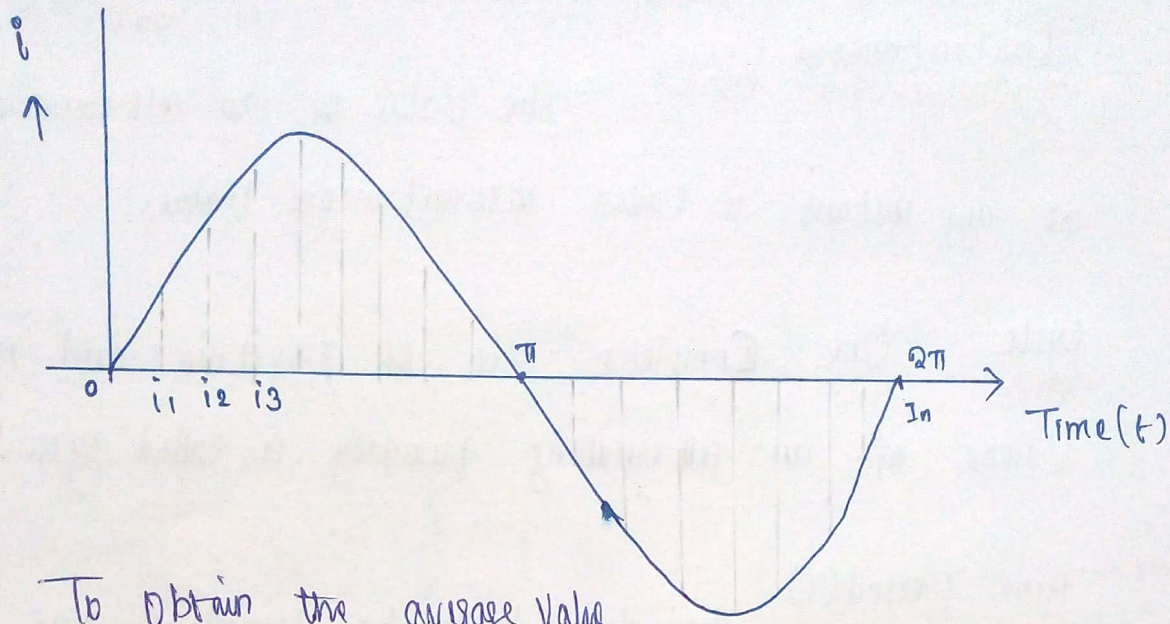

To obtain the average value, divide the period into n equal intervals.

Then the average value of the current is

$$I_{av} = \frac{i_1 + i_2 + i_3 + \cdots + i_n}{n}$$

$$I_{av} = \frac{\text{Area under the curve}}{\text{Time period (Base)}}$$

Average Value Derivation.

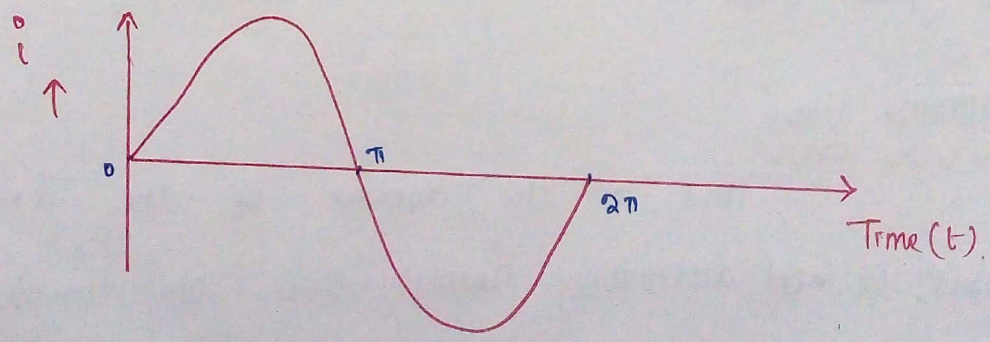

Scanned by CamScanner

Let i = Instantaneous Value of current

and I_m = Maximum Value of current.

$$i = I_m \sin\theta.$$

$$\text{Average Value} = \frac{\text{Area under the curve}}{\text{Base length}}.$$

$$I_{av} = \int_0^{\pi} \frac{i\, d\theta}{\pi}$$ (for symmetric wave take half cycles only)

$$= \int_0^{\pi} \frac{I_m \sin\theta\, d\theta}{\pi}$$

$$= \frac{I_m}{\pi} \int_0^{\pi} \sin\theta\, d\theta.$$

$$= \frac{I_m}{\pi} \left[-\cos\theta\right]_0^{\pi}$$

$$I_{av} = \frac{I_m}{\pi} \left[-\cos\pi - (-\cos 0)\right]$$

$$= \frac{I_m}{\pi} \left[-(-1) - (-1)\right] = \frac{I_m}{\pi}(1+1)$$

$$\boxed{I_{av} = \frac{2 I_m}{\pi}} \Rightarrow \boxed{I_{av} = 0.637\, I_m}$$

Similarly

$$\boxed{V_{av} = \frac{2 V_m}{\pi}} \Rightarrow \boxed{V_{av} = 0.637\, I_m}$$

Scanned by CamScanner

ROOT MEAN SQUARE VALUE (RMS VALUE) (or) EFFECTIVE VALUE.

When an alternating current flows through a resistance for a certain time. Certain amount of heat is produced. Now assume that a direct current is passed through the same resistance for the same time such that the same amount of heat is developed. This value of steady current which has caused the same heat as that of alternating current is known as Rms Value.

Rms Value Derivation:

$$\text{Rms Value} = \sqrt{\frac{\text{Area of squared curve}}{\text{Base}}}$$

$$= \sqrt{\frac{\int_0^{\pi} i^2 \, d\theta}{\pi}} \quad \text{for half cycle.}$$

$$= \sqrt{\int_0^{\pi} \frac{(I_m \sin\theta)^2}{\pi} \, d\theta}$$

$$= \sqrt{\int_0^{\pi} \frac{I_m^2 \sin^2\theta}{\pi} \, d\theta}$$

$$I_{rms} = \sqrt{\frac{I_m^2}{\pi} \int_0^{\pi} \sin^2\theta \, d\theta} \qquad \left[\because \sin^2\theta = \frac{1-\cos 2\theta}{2}\right]$$

Scanned by CamScanner

$$I_{rms} = \sqrt{\frac{I_m^2}{\pi}\int_0^{\pi}\left(\frac{1-\cos 2\theta}{2}\right)d\theta}$$

$$I_{rms} = \sqrt{\frac{I_m^2}{2\pi}\int_0^{\pi}(1-\cos 2\theta)\,d\theta}$$

$$I_{rms} = \sqrt{\frac{I_m^2}{2\pi}\left[\theta - \frac{\sin 2\theta}{2}\right]_0^{\pi}}$$

$$= \sqrt{\frac{I_m^2}{2\pi}\left[\left[\pi - \frac{\sin 2\pi}{2}\right] - \left[0 - \frac{\sin 2(0)}{2}\right]\right]}$$

$$= \sqrt{\frac{I_m^2}{2\pi}(\pi)} = \sqrt{\frac{I_m^2}{2}}$$

$$I_{rms} = \frac{\sqrt{I_m^2}}{\sqrt{2}}$$

$$\boxed{I_{rms} = \frac{I_m}{\sqrt{2}} \quad (\text{or}) \quad 0.707\, I_m}$$

Similarly

$$\boxed{V_{rms} = \frac{V_m}{\sqrt{2}} \quad (\text{or}) \quad 0.707\, V_m}$$

Scanned by CamScanner

FORM FACTOR :

The ratio of Rms Value to the average Value of an alternating quantity is called form factor.

$$\text{Form factor} = \frac{\text{Rms Value}}{\text{Average Value}}$$

$$= \frac{I_m/\sqrt{2}}{\frac{2I_m}{\pi}}$$

$\left[\pi = \frac{22}{7}\right]$

$[\pi = 3.14]$

$$= \frac{\cancel{I_m}}{\sqrt{2}} \times \frac{\pi}{2\cancel{I_m}} = \frac{\pi}{2\sqrt{2}}$$

$$\boxed{F.F = 1.11}$$

PEAK FACTOR : [Crest factor]

The ratio of Maximum Value to the rms Value of an alternating quanity is called Peak factor.

$$\text{Peak factor} = \frac{\text{Maximum Value}}{\text{Rms Value}}$$

$$= \frac{I_m}{\frac{I_m}{\sqrt{2}}} = \cancel{I_m} \times \frac{\sqrt{2}}{\cancel{I_m}}$$

$$= \sqrt{2} = 1.414.$$

$$\boxed{\text{Peak Factor} = 1.414}$$

Scanned by CamScanner

PHASORS :

Fig shows two sinusoidal waves.

* One wave represent the voltage and the other current.

eg

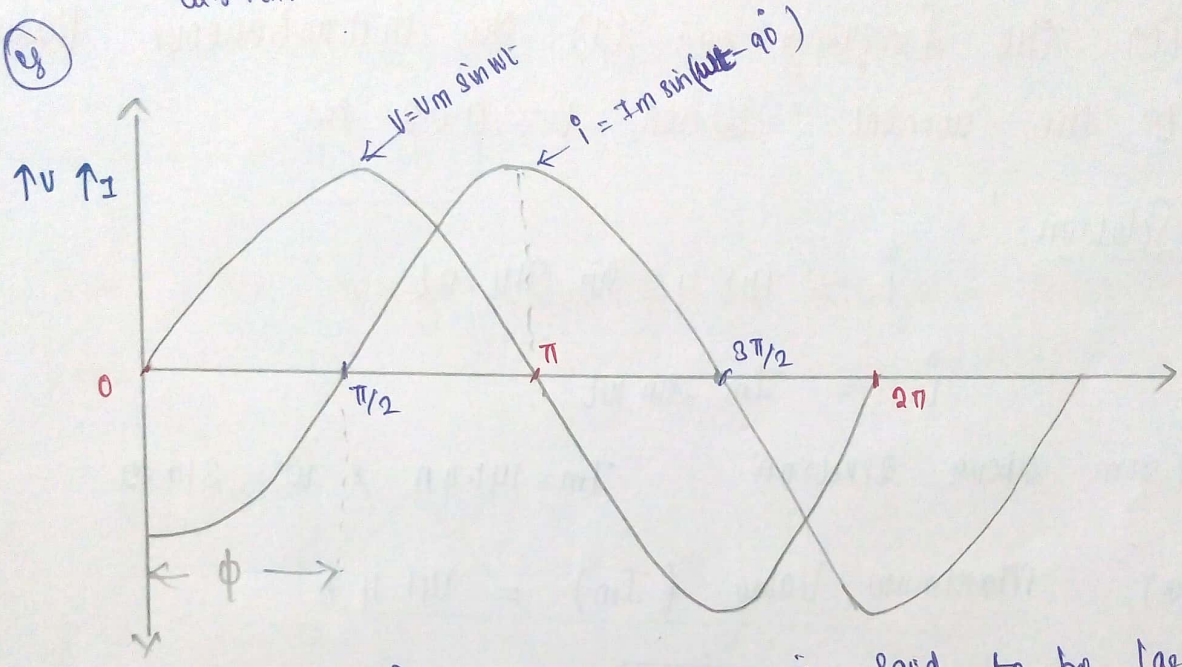

Therefore current wave is said to be lagging behind the voltage by an angle 90°. It can also stated that voltage leads the current by an angle 90°

Phase difference : When two quantities of the same frequency have different zero points, they are said to have a phase difference.

Scanned by CamScanner

1. The alternating current passed through a circuit is being by $i = 141.4 \sin 314.2t$. What are the values of (a) Maximum value of current (b) rms current. (c) the frequency and (d) the instantaneous value of the current when $t = 0.02$ sec.

Solution:

$$i = 141.4 \sin 314.2t$$

$$i = I_m \sin \omega t.$$

From above equation $I_m = 141.4\,A$ & $\omega = 314.2$

(a) Maximum Value $(I_m) = 141.4\,A$

$$\boxed{I_m = 141.4\,A}$$

(b) Rms Value:

$$I_{rms} = \frac{I_m}{\sqrt{2}}$$

$$= \frac{141.4}{1.414}$$

$$\boxed{I_{rms} = 100\,A}$$

(c) Frequency

$$\omega = 2\pi f.$$

$$f = \frac{\omega}{2\pi} = \frac{314.2}{(2 \times 3.14)}$$

$$\boxed{f = 50\,Hz}$$

Scanned by CamScanner

(d) Instantaneous Value when $t = 0.02$ sec

$$i = 141.4 \sin 314.2 \times 0.02$$

$$i = 141.4 \sin\left(\frac{180}{\pi}\right) \times 314.2 \times 0.02$$

$$i = 141.4 \sin 360^\circ$$

$$\boxed{i = 0}$$

degree = radian $\times \frac{180}{\pi}$

(2) Find the average Value of the triangular wave form below :

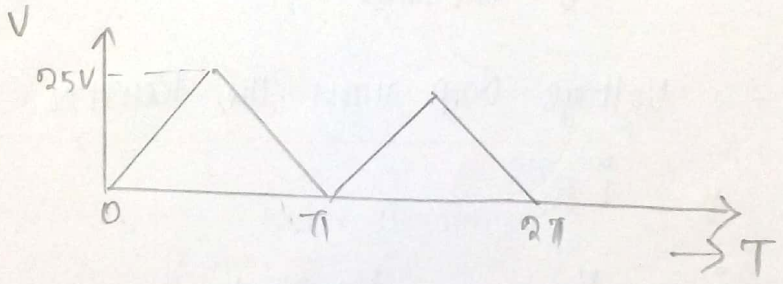

Area under one cycle = Area of triangle ($\frac{1}{2}bh$)

$$= \frac{1}{2} \times 25 \times \pi$$

$$\text{Average Value} = \frac{\text{Area under the wave}}{\text{Base}}$$

$$= \frac{\frac{1}{2} \times 25 \times \cancel{\pi}}{\cancel{\pi}}$$

$$= 12.5\,V$$

Scanned by CamScanner

AC THROUGH PURE RESISTOR

In the circuit shown a pure resistor of R Ω is connected across an alternating voltage of –

$$V = V_m \sin \omega t$$

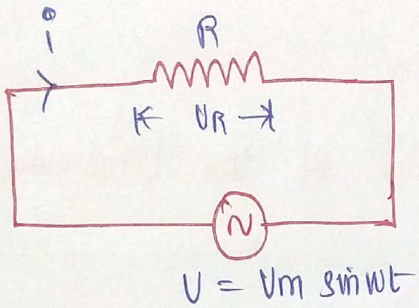

V_R = Voltage drop across the Resistor.

$$V = iR$$

$$i = \frac{V}{R} = \frac{V_m \sin \omega t}{R}$$

$$i = \left(\frac{V_m}{R}\right) \sin \omega t$$

$$i = I_m \sin \omega t \qquad \text{where } \frac{V_m}{R} = I_m$$

In pure resistive circuit equations of voltage and current are

$$\boxed{\begin{aligned} V &= V_m \sin \omega t \\ i &= I_m \sin \omega t \end{aligned}}$$

Scanned by CamScanner

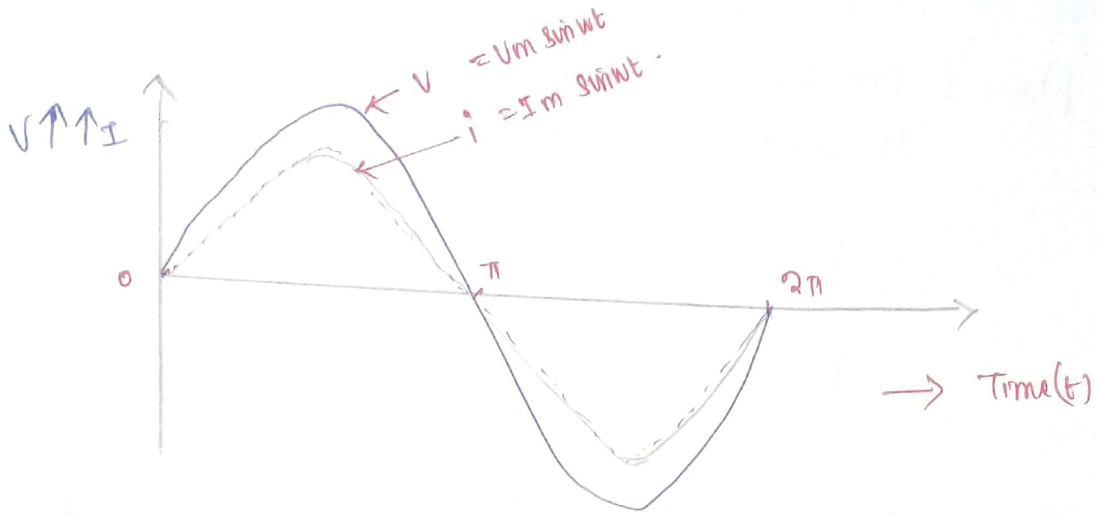

ϕ = Phase angle between Voltage and current

For Resistive circuit Vector diagram.

Vector diagram

In Pure resistance circuit the current is inphase with the applied Voltage.

$$\phi = 0^\circ$$

Power factor : Cosine angle is called Power factor.

Power factor = $\cos\phi$.

$$P.F = \cos 0^\circ$$

$$\boxed{P.F = 1}$$

In Pure resistive circuit P.F is unity.

Scanned by CamScanner

Power (Pure Resistive circuit)

Instantaneous power $P = V \times i$

$$P = V_m \sin \omega t \times I_m \sin \omega t$$

$$P = V_m \sin\theta \times I_m \sin\theta .$$

$$\text{Average Power} = \frac{\text{Area under the wave}}{\text{Base}}$$ (for full cycle)

$$P_{av} = \frac{\int_0^{2\pi} P \, d\theta}{2\pi}$$

$$= \frac{\int_0^{2\pi} (V_m \sin\theta \times I_m \sin\theta) \, d\theta}{2\pi}$$

$$= \frac{V_m I_m}{2\pi} \int_0^{2\pi} \sin^2\theta \, d\theta$$ $\left(\sin^2\theta = \frac{1-\cos 2\theta}{2} \right)$

$$P_{av} = \frac{V_m I_m}{2\pi} \int_0^{2\pi} \left(\frac{1-\cos 2\theta}{2} \right) d\theta$$

$$= \frac{V_m I_m}{2\pi \times 2} \int_0^{2\pi} (1-\cos 2\theta) \, d\theta$$

$$= \frac{V_m I_m}{4\pi} \left[\theta - \frac{\sin 2\theta}{2} \right]_0^{2\pi}$$

$$= \frac{V_m I_m}{4\pi} \left[\left(2\pi - \cancel{\frac{\sin 2(2\pi)}{2}} \right) - \left(\cancel{0} - \cancel{\frac{\sin 2(0)}{2}} \right) \right]$$

Scanned by CamScanner

$$\text{Average power} = \frac{V_m I_m}{\cancel{4\pi}_{2}} (\cancel{2\pi})$$

$[2 = \sqrt{2} \times \sqrt{2}$
$2 = \sqrt{4} = 2]$

$$= \frac{V_m I_m}{2}.$$

$$= \frac{V_m I_m}{\sqrt{2}\sqrt{2}} = \left(\frac{V_m}{\sqrt{2}}\right)\left(\frac{I_m}{\sqrt{2}}\right)$$

$$\boxed{\text{Average power} = VI \text{ watts}}$$

$$\boxed{P = VI \text{ watts}}$$ for pure Resistive circuits.

Where

V = Rms Value of Voltage.

I = Rms Value of currents.

AC THROUGH PURE INDUCTOR

When an alternating current flows through a pure inductive coil, a back emf is induced due to the inductance of the coil. This emf opposes the applied voltage at instant.

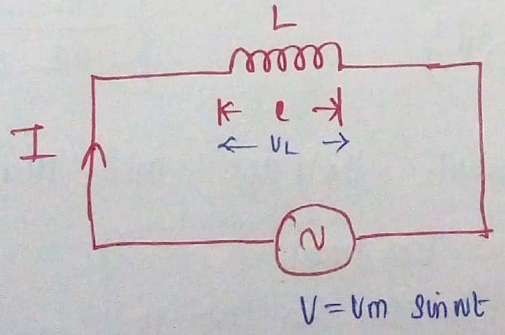

Scanned by CamScanner

i.e. Applied Voltage = Back emf

Applied Voltage = Voltage across L (V_L)

emf induced in the coil

$$e = L\frac{di}{dt}$$

$$V_m \sin \omega t = L\frac{di}{dt}$$

$$di = \frac{V_m \sin \omega t}{L} dt$$

integrate on both sides.

$$\int di = \int \frac{V_m \sin \omega t}{L} dt$$

$$i = \frac{V_m}{L} \int \sin \omega t \, dt$$

$$i = \frac{V_m}{L}\left(-\frac{\cos \omega t}{\omega}\right)$$

$$= \frac{V_m}{\omega L}\left[-\cos \omega t\right]$$

$\left[\cos\theta = \sin(90-\theta)\right]$

$\cos \omega t = \sin(90-\omega t)$

$$= \frac{V_m}{\omega L}\left[-\sin(90-\omega t)\right]$$

$$i = \frac{V_m}{\omega L} \sin(\omega t - 90^\circ)$$

$$i = I_m \sin(\omega t - 90^\circ)$$

$$\left[\frac{V_m}{\omega L} = I_m\right]$$

For pure inductive circuit Voltage and current equations are

$$\boxed{\begin{aligned} V &= V_m \sin \omega t \\ i &= I_m \sin(\omega t - 90^\circ) \end{aligned}}$$

Scanned by CamScanner

For pure inductor circuit -

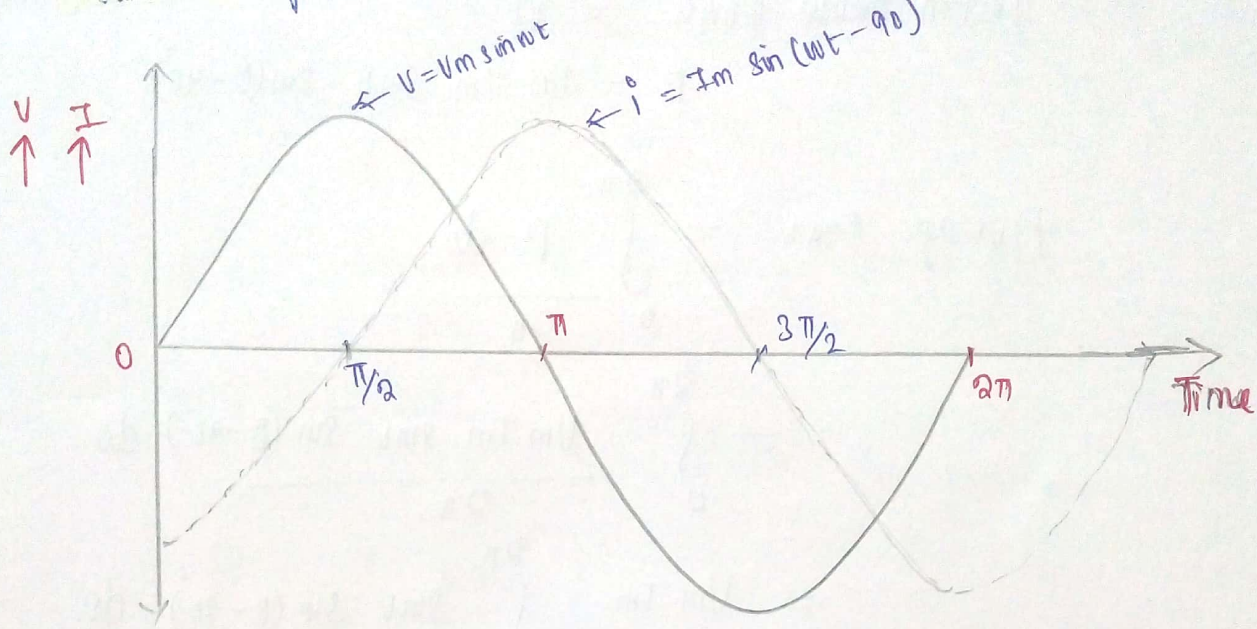

Vector diagram:

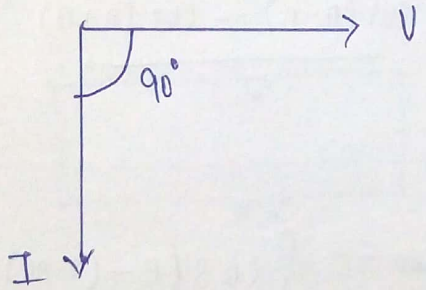

$V = V_m \sin \omega t$

$i = i_m \sin(\omega t - 90°)$

The current I lags behind the applied voltage V by 90°

Power in pure inductor circuit -

$V = V_m \sin \omega t$

$i = I_m \sin(\omega t - 90°)$

$P = Vi$

$= V_m \sin \omega t \cdot I_m \sin(\omega t - 90°)$

$P = V_m \sin \theta \cdot I_m \sin(\theta - 90°)$

Scanned by CamScanner

Instantaneous power $= vi$

$$P = V_m I_m \sin\theta \sin(\theta - 90^\circ)$$

Average power $= \int_0^{2\pi} \frac{P \, d\theta}{2\pi}$

$$= \int_0^{2\pi} \frac{V_m I_m \sin\theta \sin(\theta - 90^\circ) \, d\theta}{2\pi}$$

$$= \frac{V_m I_m}{2\pi} \int_0^{2\pi} \sin\theta \sin(\theta - 90^\circ) \, d\theta$$

$$\boxed{\sin A \sin B = \frac{\cos(A-B) - \cos(A+B)}{2}}$$

$\left[A = \theta, \; B = \theta - 90^\circ \right]$

$$= \frac{V_m I_m}{2\pi} \int_0^{2\pi} \frac{\cos(\theta - (\theta - 90^\circ)) - \cos(\theta + \theta - 90^\circ)}{2} \, d\theta$$

$$= \frac{V_m I_m}{4\pi} \int_0^{2\pi} \cos(\cancel{\theta^\circ} - \theta + 90) - \cos(2\theta - 90^\circ) \, d\theta$$

$$P = \frac{V_m I_m}{4\pi} \int_0^{2\pi} \left(\cancelto{0}{\cos 90^\circ} - \cos(2\theta - 90^\circ) \right) d\theta$$

$$= \frac{-V_m I_m}{4\pi} \int_0^{2\pi} (\cos 2\theta - 90^\circ) \, d\theta$$

$$= \frac{-V_m I_m}{4\pi} \left[\frac{\sin(2\theta - 90^\circ)}{2} \right]_0^{2\pi}$$

Scanned by CamScanner

$$P = \frac{-V_m I_m}{4\pi \times 2}\left[\sin(4\pi - 90^\circ) - \sin(0 - 90^\circ)\right]$$

$$P = \frac{-V_m I_m}{8\pi}\left[\sin(720 - 90^\circ) - \sin(-90^\circ)\right]$$

$$P = \frac{-V_m I_m}{8\pi}\left(\sin 630^\circ + \sin 90^\circ\right]$$

$$P = \frac{-V_m I_m}{8\pi}\left(\cancel{-1}^{0} \cancel{+1}\right)$$

$$\boxed{P = 0 \text{ watts}}$$

AC THROUGH PURE CAPACITOR

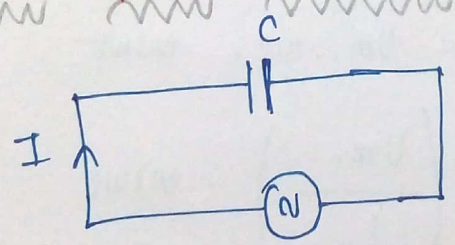

$V = V_m \sin \omega t$.

A Pure capacitor C is connected across a supply voltage of V Volts as shown in fig.

$$V = V_m \sin \omega t$$

When alternating voltage is given to a capacitor the capacitor is charged in one direction and then in the opposite direction.

Scanned by CamScanner

$$Q = CV$$

Q = Charge in Coloumbs.

$$Q = C\, V_m \sin wt.$$

Now the current in the circuit is

$$i = \frac{dQ}{dt}.$$

$$i = \frac{d}{dt}\left(CV_m \sin wt\right)$$

$$i = CV_m \frac{d}{dt}\left(\sin wt\right)$$

$$i = CV_m \left(w \cos wt\right)$$

$$\left[wc = \frac{1}{\frac{1}{wc}}\right]$$

$$i = V_m . wc . \cos wt$$

$$\left[\frac{1}{wc} = X_c\right]$$

$$i = \left(\frac{V_m}{\frac{1}{wc}}\right) . \cos wt$$

$$\left[\frac{V_m}{X_c} = I_m\right]$$

$$i = \frac{V_m}{X_c} \cos wt.$$

[X_c = capacitive inductance.

$$X_c = \frac{1}{wc} = \frac{1}{2\pi f L}$$]

$$\left[\cos wt = \sin(90 + wt)\right.$$

$$\cos wt = \sin(wt + 90)$$

$$i = I_m \cos wt$$

$$i = I_m \sin(wt + 90^\circ)$$

Scanned by CamScanner

For Pure Capacitive Circuits

$$V = V_m \sin \omega t$$
$$i = I_m \sin(\omega t + 90^\circ)$$

Wave form.

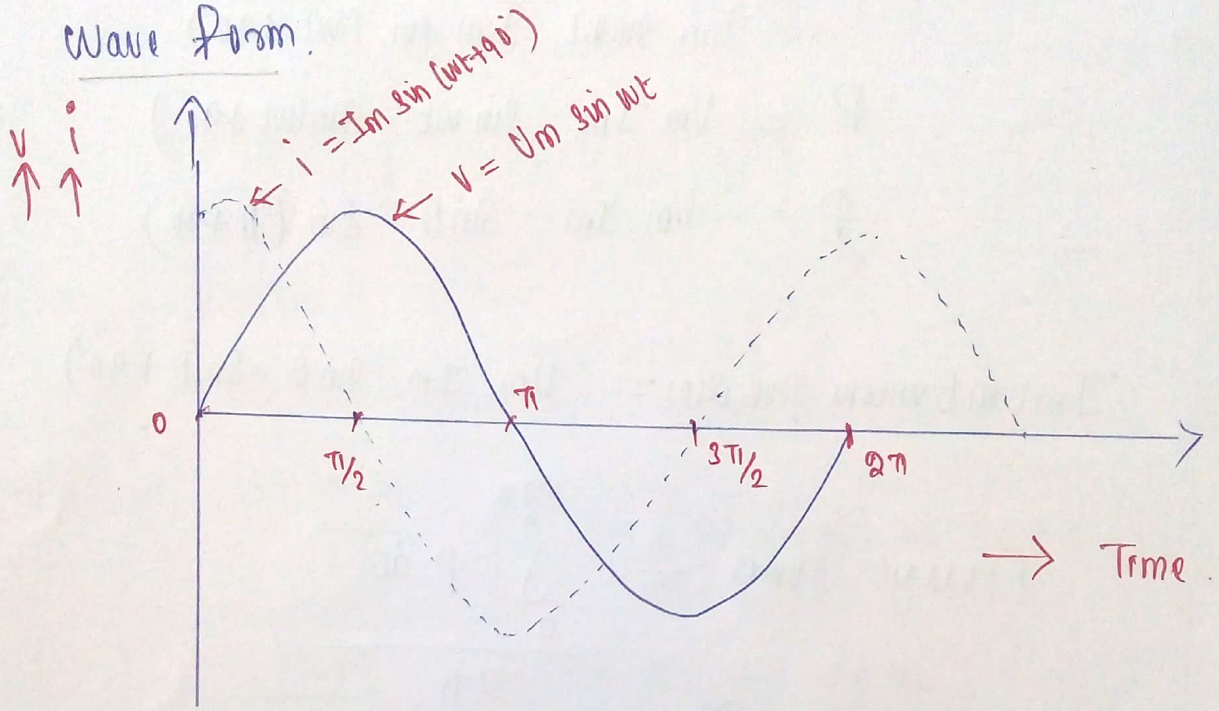

Vector diagram: for Pure Capacitive Circuits.

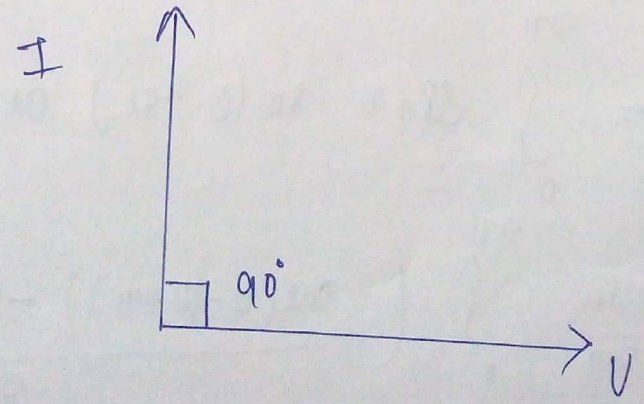

It is Clear that from the equation current i leads the Voltage V by an angle 90°

Scanned by CamScanner

Power factor $= \cos\phi = \cos 90^\circ = 0^\circ$

Power for Pure Capacitive Circuit.

$$P = Vi$$

$$= V_m \sin\omega t \; I_m \sin(\omega t + 90^\circ)$$

$$P = V_m I_m \sin\omega t \; \sin(\omega t + 90^\circ)$$

$$P = V_m I_m \sin\theta \; \sin(\theta + 90^\circ)$$

Instantaneous power(P) $= V_m I_m \sin\theta \; \sin(\theta + 90)$

$$\text{Average power} = \frac{\int_0^{2\pi} P \, d\theta}{2\pi}$$

$$= \int_0^{2\pi} \frac{V_m I_m \sin\theta \; \sin(\theta + 90^\circ)}{2\pi} \, d\theta$$

$$= \frac{V_m I_m}{2\pi} \int_0^{2\pi} \sin\theta \; \sin(\theta + 90^\circ) \, d\theta$$

$$= \frac{V_m I_m}{2\pi} \int_0^{2\pi} \left(\frac{\cos(\theta - (\theta + 90^\circ)) - \cos(\theta + \theta + 90^\circ)}{2} \right) d\theta$$

$$= \frac{V_m I_m}{2\pi} \int_0^{2\pi} \left(\frac{\cos(\cancel{\theta} - \cancel{\theta} + 90^\circ) - \cos(2\theta + 90^\circ)}{2} \right) d\theta$$

Scanned by CamScanner

$$P = \frac{V_m I_m}{2\pi \times 2} \int_0^{2\pi} \cos 90^\circ - \cos(2\theta + 90)\, d\theta$$

$$P = \frac{V_m I_m}{4\pi} \int_0^{2\pi} \left(0 - \cos(2\theta + 90^\circ)\right) d\theta$$

$$P = -\frac{V_m I_m}{4\pi} \int_0^{2\pi} \cos(2\theta + 90^\circ)\, d\theta$$

$$P = -\frac{V_m I_m}{4\pi} \left[\frac{\sin(2\theta + 90^\circ)}{2} \right]_0^{2\pi}$$

$$P = \frac{-V_m I_m}{4\pi \times 2} \left[\sin(2\theta + 90^\circ) \right]_0^{2\pi}$$

$$P = \frac{-V_m I_m}{8\pi} \left[\sin\left(\overset{(720+90)}{2(2\pi) + 90^\circ}\right) - \sin(2(0) + 90) \right]$$

$$P = \frac{-V_m I_m}{8\pi} \left[\sin 810 - \sin 90^\circ \right]$$

$$P = \frac{-V_m I_m}{8\pi} \times (\overset{0}{\cancel{1-1}})$$

$$\boxed{P = 0 \text{ watts}}$$ For Pure capacitive circuits.

Scanned by CamScanner

RL SERIES CIRCUIT :-

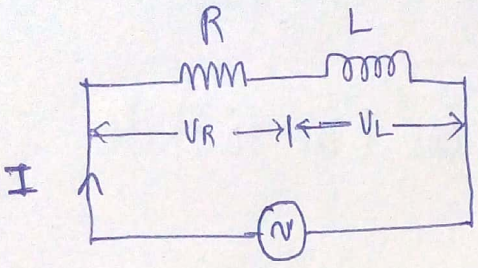

$V = V_m \sin \omega t$

(a) R-L Series Circuit

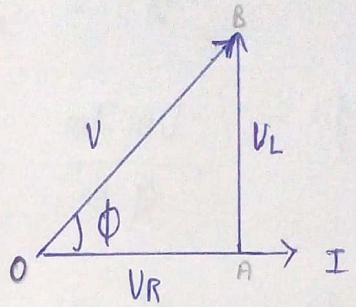

(b) Vector diagram

* Pure Resistance R ohms connected in series with a Pure inductance of L Henry.

Let

V = applied Voltage

I = current in the circuit.

$V_R = IR$ | V_R = Voltage drop across the Resistance

$V_L = IX_L$ | V_L = Voltage drop across inductance

* fig (b) shows Vector (or) phasor diagram of RL series circuit.

* Consider current as reference phasor OA represents Voltage drop V_R, AB represents V_L, leads the current by 90°, OB represents the applied Voltage V, and it is the phasor sum of the two Voltage drops.

$$OB = V$$

$$OB = \sqrt{OA^2 + AB^2}$$

$$V = \sqrt{V_R^2 + V_L^2}$$

$$V = \sqrt{(IR)^2 + (IX_L)^2}$$

Scanned by CamScanner

$$V = \sqrt{I^2R^2 + I^2X_L^2}$$

$$= \sqrt{I^2(R^2+X_L^2)}$$

$$= \sqrt{I^2}\cdot\sqrt{R^2+X_L^2}$$

$$V = I\cdot\sqrt{R^2+X_L^2}$$

$$\frac{V}{I} = \sqrt{R^2+X_L^2}$$

$$\boxed{Z = \sqrt{R^2+X_L^2}}$$

Where Z is the impedance of the circuit.

From Vector diagram,

$$\tan\phi = \frac{AB}{OA} = \frac{V_L}{V_R} = \frac{IX_L}{IR} = \frac{X_L}{R}$$

$$\tan\phi = \frac{X_L}{R}$$

Phase angle. $\boxed{\phi = \frac{X_L}{R}}$

Power factor $(\cos\phi) = \frac{OA}{OB} = \frac{V_R}{V} = \frac{IR}{IZ}$

Power factor $\Rightarrow$ $\boxed{\cos\phi = \frac{R}{Z}}$

Wave form:

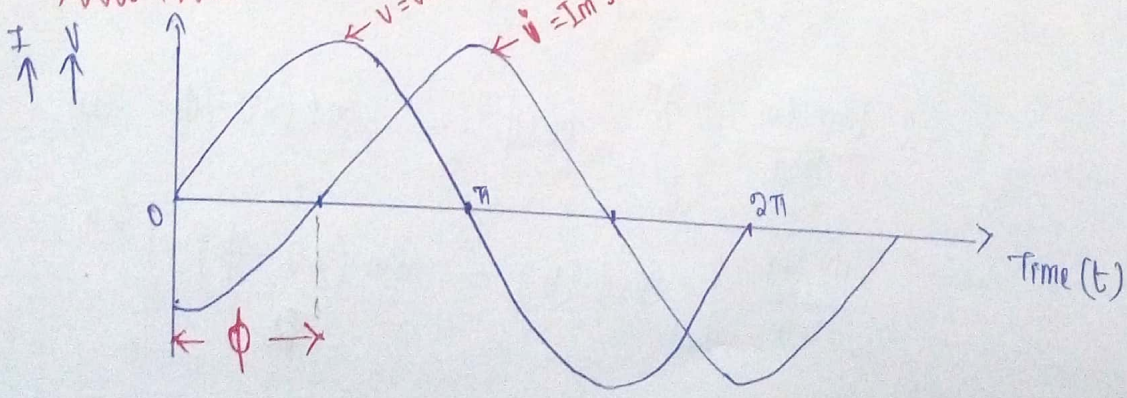

Scanned by CamScanner

RL Series circuit

Applied Voltage $V = V_m \sin \omega t$

Circuit current $i = I_m \sin(\omega t - \phi)$

(or)

$$V = V_m \sin\theta$$
$$i = I_m \sin(\theta - \phi)$$

Power in RL Series Circuit

Instantaneous Power $= vi$

$$\text{Average Power} = \int_0^{2\pi} \frac{vi \, d\theta}{2\pi}$$

$$= \int_0^{2\pi} \frac{V_m \sin\theta \cdot I_m \sin(\theta - \phi) \, d\theta}{2\pi}$$

$$= \frac{V_m I_m}{2\pi} \int_0^{2\pi} \sin\theta \cdot \sin(\theta - \phi) \, d\theta$$

$$\boxed{\sin A \sin B = \frac{\cos(A-B) - \cos(A+B)}{2}} \Rightarrow A = \theta, \; B = (\theta - \phi)$$

$$\text{Average Power} = \frac{V_m I_m}{2\pi} \int_0^{2\pi} \frac{\cos(\theta - (\theta - \phi)) - \cos(\theta + \theta - \phi)}{2} \, d\theta$$

$$= \frac{V_m I_m}{2\pi \times 2} \int_0^{2\pi} \cos(\cancel{\theta} - \cancel{\theta} + \phi) - \cos(2\theta - \phi) \, d\theta$$

$$= \frac{V_m I_m}{4\pi} \int_0^{2\pi} \cos\phi - \cos(2\theta - \phi) \, d\theta$$

$$= \frac{V_m I_m}{4\pi} \left[\cos\phi \, (\theta) - \frac{\sin(2\theta - \phi)}{2} \right]_0^{2\pi}$$

Scanned by CamScanner

$$\text{Average power} = \frac{V_m I_m}{4\pi}\left[\left(\cos\phi\,(2\pi) - \frac{\sin(2(2\pi)-\phi)}{2}\right) - \left[\cos\phi(0) - \frac{\sin(2(0)-\phi)}{2}\right]\right]$$

$$= \frac{V_m I_m}{4\pi}\left[\left(2\pi\cdot\cos\phi - \frac{\sin(4\pi-\phi)}{2}\right) - \left(0 - \frac{\sin(-\phi)}{2}\right)\right]$$

$$= \frac{V_m I_m}{4\pi}\left[2\pi\cdot\cos\phi - \frac{\sin(4\pi-\phi)}{2} + \frac{\sin(-\phi)}{2}\right]$$

$$= \frac{V_m I_m}{4\pi}\left[2\pi\cdot\cos\phi + \cancel{\frac{\sin\phi}{2}} - \cancel{\frac{\sin\phi}{2}}\right]$$

$$= \frac{V_m I_m}{2\cancel{4\pi}}\left[\cancel{2\pi}\cos\phi\right]$$

$$= \frac{V_m I_m}{2}\cos\phi$$

$$\left[2 = \sqrt{2}\cdot\sqrt{2}\right]$$

$$= \frac{V_m}{\sqrt{2}}\cdot\frac{I_m}{\sqrt{2}}\cos\phi$$

$$\boxed{P = V I \cos\phi \text{ watts}}$$

Where.

V & I are rms value of Voltage and currents.

Scanned by CamScanner

R-C SERIES CIRCUIT:

(a) RC Series Circuit

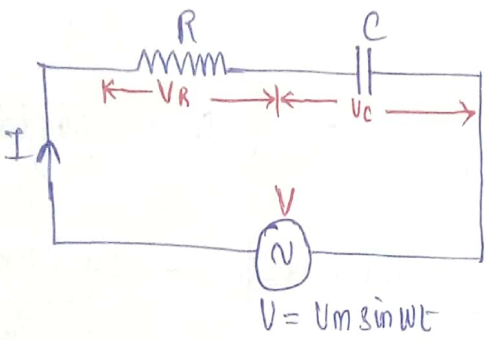

(b) Vector diagram

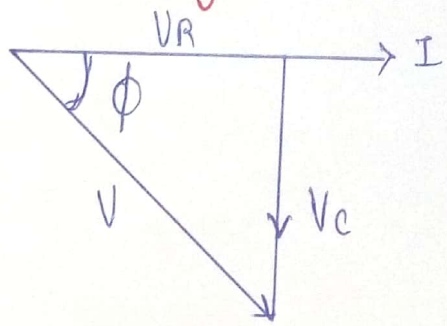

V = applied Voltage.

I = Current through the circuit.

$V_R = IR$. | V_R = Voltage drop across the Resistor

$V_C = IX_C$ | V_C = Voltage drop across the capacitor.

fig (b) Shows Phasor (or) Vector diagram of the circuit can be drawn.

* current Vector is taken as Reference Vector

OA = Voltage drop V_R in phase with current I

AB = Voltage drop V_C lags the current by 90°

OB = applied Voltage.

$$OB = \sqrt{OA^2 + AB^2}$$

$$V = \sqrt{V_R^2 + V_C^2}$$

$$V = \sqrt{(IR)^2 + (IX_C)^2}$$

Scanned by CamScanner

$$V = I\sqrt{R^2 + X_C^2}$$

$$\frac{V}{I} = \sqrt{R^2 + X_C^2}$$

$$\boxed{Z = \sqrt{R^2 + X_C^2}}$$

Z = Impedance of R-C Series circuit.

$$\text{Power factor} = \cos\phi = \frac{OA}{OB} = \frac{V_R}{V} = \frac{IR}{IZ}$$

$$\boxed{\cos\phi = \frac{R}{Z}}$$

From Vector diagram in R-C Series circuit the current I leads the applied voltage V by an angle ϕ°

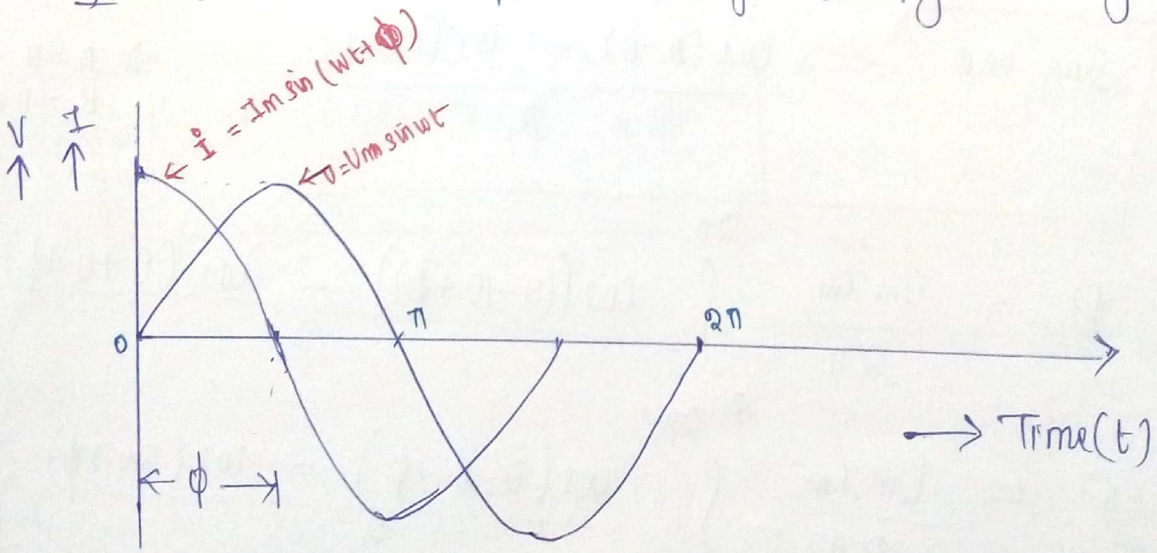

ϕ = phase angle b/w V & I

$$\boxed{\begin{array}{lcl} V = V_m \sin \omega t & & V = V_m \sin\theta \\ i = I_m \sin(\omega t + \phi) & \text{(or)} & i = I_m \sin(\theta + \phi) \end{array}}$$

For R-C Series circuit.

Scanned by CamScanner

Power in R-C Series Circuit.

$$V = V_m \sin\theta$$

$$i = I_m \sin(\theta + \phi)$$

$$\text{Average Power } (P) = \int_0^{2\pi} \frac{vi \, d\theta}{2\pi}$$

$$= \int_0^{2\pi} \frac{V_m \sin\theta \; I_m \sin(\theta+\phi) \, d\theta}{2\pi}$$

$$= \frac{V_m I_m}{2\pi} \int_0^{2\pi} \sin\theta \, \sin(\theta+\phi) \, d\theta.$$

$$\boxed{\sin A \sin B = \frac{\cos(A-B) - \cos(A+B)}{2}}$$

$\Rightarrow A = \theta$
$B = \theta + \phi$

$$P = \frac{V_m I_m}{2\pi} \int_0^{2\pi} \frac{\cos((\theta-(\theta+\phi))) - \cos(\theta+\theta+\phi)}{2} \, d\theta$$

$$P = \frac{V_m I_m}{2\pi} \int_0^{2\pi} \frac{\cos(\cancel{\theta}-\cancel{\theta}-\phi) - \cos(2\theta+\phi)}{2} \, d\theta$$

$$P = \frac{V_m I_m}{2\pi \times 2} \int_0^{2\pi} \cos(-\phi) - \cos(2\theta+\phi) \, d\theta.$$

$$P = \frac{V_m I_m}{2\pi \times 2} \left[\cos\phi \cdot \theta - \frac{\sin(2\theta+\phi)}{2} \right]_0^{2\pi}$$

$$P = \frac{V_m I_m}{4\pi} \left[\cos\phi (2\pi - 0) - \left[\frac{\sin(2(2\pi)+\phi)}{2} - \frac{\sin 2(0)+\phi}{2} \right] \right]$$

Scanned by CamScanner

$$P = \frac{V_m I_m}{4\pi}\left[2\pi \cdot \cos\phi - \left(\frac{\sin(4\pi+\phi)}{2} - \frac{\sin\phi}{2}\right)\right]$$

$$P = \frac{V_m I_m}{4\pi}\left(2\pi \cdot \cos\phi - \cancel{\frac{\sin\phi}{2}} + \cancel{\frac{\sin\phi}{2}}\right)$$

$$P = \frac{V_m I_m}{\cancel{4\pi}_{2}} \cancel{2\pi} \cos\phi$$

$$P = \frac{V_m I_m}{2} \cos\phi$$

$$P = \frac{V_m}{\sqrt{2}} \cdot \frac{I_m}{\sqrt{2}} \cos\phi$$

$$\boxed{P = V I \cos\phi \text{ watts}}$$

$V_{rms} = \frac{V_m}{\sqrt{2}}$

$I_{rms} = \frac{I_m}{\sqrt{2}}$

Where

V & I are rms value of Voltage and currents.

Scanned by CamScanner

R-L-C SERIES CIRCUIT :

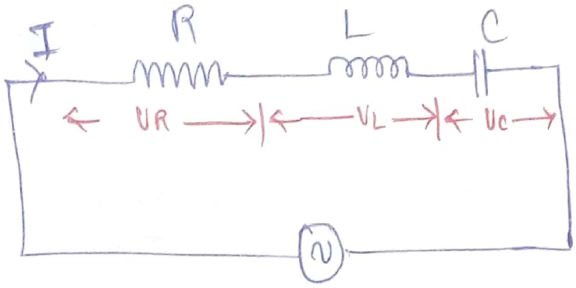

$V = V_m \sin \omega t$

(a) circuit diagram

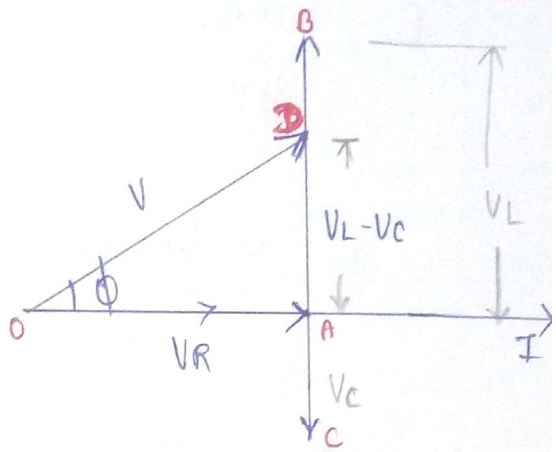

(b) Vector diagram

R, L, and C are connected in series across a supply Voltage of V Volts.

I = current through the circuit.

$V_R = IR$

$V_L = IX_L$

$V_c = IX_c$

V_R = Voltage drop across R

V_L = Voltage drop across L

V_c = Voltage drop across C

In Vector diagram.

$OA = V_R$

$AB = V_L$

$AC = V_c$

Assume $V_L > V_c$

$AD = V_L - V_c$

$OD = V$

Triangle OAD

$$OD = \sqrt{OA^2 + AD^2}$$

$$V = \sqrt{V_R^2 + (V_L - V_c)^2}$$

Scanned by CamScanner

$$V = \sqrt{(IR)^2 + (IX_L - IX_C)^2}$$

$$= \sqrt{I^2R^2 + [I(X_L - X_C)]^2}$$

$$= \sqrt{I^2R^2 + I^2(X_L - X_C)^2}$$

$$= \sqrt{I^2(R^2 + (X_L - X_C))^2}$$

$$V = I\sqrt{R^2 + (X_L - X_C)^2}$$

$$\frac{V}{I} = \sqrt{R^2 + (X_L - X_C)^2}.$$

$$\boxed{Z = \sqrt{R^2 + (X_L - X_C)^2}}$$ ⇒ Impedance of RLC circuit.

Power factor $(\cos\phi) = \frac{OA}{OD}$

$$\cos\phi = \frac{V_R}{V} = \frac{IR}{IZ}$$

$$\boxed{\cos\phi = \frac{R}{Z}}$$ ⇒ Power factor

Phase angle.

$$\tan\phi = \left(\frac{X_L - X_C}{R}\right)$$

$$\phi = \tan^{-1}\left(\frac{X_L - X_C}{R}\right)$$

Scanned by CamScanner

Power in R-L-C Series Circuit.

$$V = V_m \sin \omega t$$

$$i = I_m \sin(\omega t - \phi) \qquad (X_L > X_C) \Rightarrow \text{RL derivation}$$

$$i = I_m \sin(\omega t + \phi) \qquad (X_C > X_L) \Rightarrow \text{RC derivation}$$

Note:

1. For $X_L > X_C$ write the expression for power in RL Series Circuit.
2. For $X_C > X_L$ write the expression for Power in RC Series Circuit.

FORMULAE USED IN SERIES CIRCUIT:

*: Voltage $V = IZ$

Current $I = \frac{V}{Z}$

Power factor $(\cos\phi) = \frac{R}{Z}$

Power $= VI\cos\phi$ watts

where

$Z = \sqrt{R^2 + X_L^2}$ for RL ckt

$Z = \sqrt{R^2 + X_C^2}$ for RC ckt

$Z = \sqrt{R^2 + (X_L \simeq X_C)^2}$ for RLC ckt.

$X_L = 2\pi f L = \omega L$

$X_C = \frac{1}{2\pi f C} = \frac{1}{\omega C}$

where

X_L = inductive reactance

X_C = Capacitive reactance

$V_R = IR$

$V_L = I X_L$

$V_C = I X_C$

V_R = Voltage drop across R

V_L = Voltage drop across L

V_C = Voltage drop across C

Scanned by CamScanner

Impedance Triangle

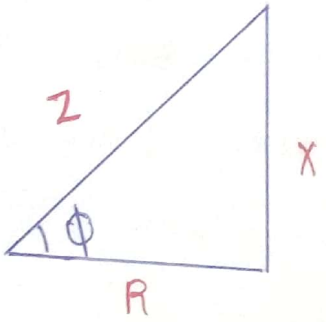

Where

R = Resistance in Ω

Z = Impedance in Ω

X = Reactance in Ω

ϕ = Phase angle b/w Voltage and current.

$$Z = \sqrt{R^2 + X^2}$$

Power factor $= \cos\phi = \frac{R}{Z}$

For RL circuit

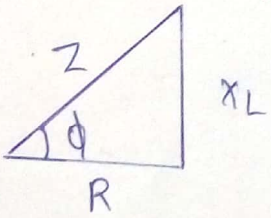

$$Z = \sqrt{R^2 + X_L^2}, \quad \cos\phi = \frac{R}{Z}$$

$$\phi = \tan^{-1}\left(\frac{X_L}{Z}\right)$$

RC circuit

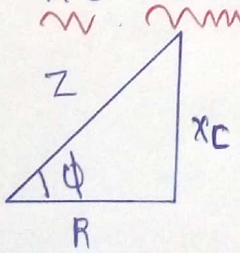

$$Z = \sqrt{R^2 + X_C^2}$$

$$\phi = \tan^{-1}\left(\frac{X_C}{Z}\right)$$

RLC circuit

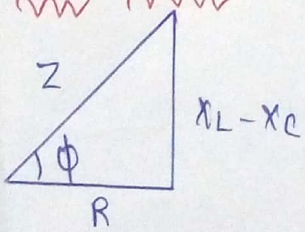

$$Z = \sqrt{R^2 + (X_L - X_C)^2}$$

$$\phi = \tan^{-1}\left(\frac{(X_L - X_C)}{Z}\right)$$

Scanned by CamScanner

Problems :

1. A series RLC circuit with a resistance of 50 Ω, a capacitor of 40 micro farad and inductance of 0.15 H is connected across 230 V, 50 Hz supply. Determine the impedance, power factor, power consumed of the circuit:

Solution.

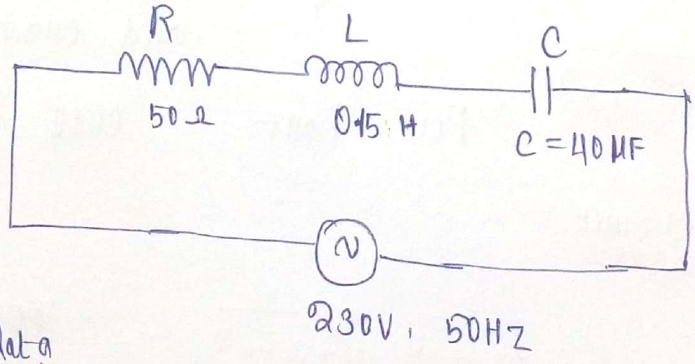

Given data

$R = 50\ \Omega$

$L = 0.15\ H$

$C = 40\ \mu F$

$C = 40 \times 10^{-6}\ F$

$V = 230V$

$f = 50Hz$

To find =?

$Z = ?$

$P.F = ?$

$P = ?$

$X_L = 2\pi f L$

$= 2 \times 3.14 \times 50 \times 0.15$

$\boxed{X_L = 47.12\ \Omega}$

Scanned by CamScanner

$$X_C = \frac{1}{2\pi f C} = \frac{1}{(2 \times 3.14 \times 50 \times 40 \times 10^{-6})}$$

$$\boxed{X_C = 79.58\ \Omega}$$

Impedance $Z = \sqrt{R^2 + (X_C - X_L)^2}$

$$Z = \sqrt{50^2 + (79.58 - 47.12)^2}$$

$$= \sqrt{50^2 + 32.46^2}$$

$$Z = \sqrt{2500 + 1053.65}$$

$$Z = \sqrt{3553.65}$$

$$\boxed{Z = 59.61\ \Omega}$$

Power factor = $\cos\phi$

$$\text{Power factor} = \frac{R}{Z} = \frac{50}{59.61}$$

$$\boxed{\text{Power factor} = 0.84}$$

Circuit current $I = \frac{V}{Z}$

$$= \frac{230}{59.61}$$

$$\boxed{I = 3.858\ \text{Amps}}$$

Power $= VI\cos\phi$

$= 230 \times 3.858 \times 0.84$

$P = 745.36$ watts

$$\boxed{P = 745.36\ \text{watts}}$$

Scanned by CamScanner

(2) A coil of resistance 8 ohms and an inductance of 0.1H is connected series with a capacitor of 75 microfarad across a 240V, 50 Hz supply.

Find
(a) the circuit current.
(b) the power factor.
(c) the power.

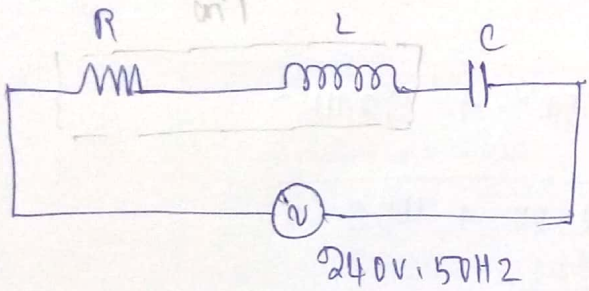

$R = 8\Omega$
$L = 0.1H$
$C = 75\mu F$
$C = 75 \times 10^{-6} F$
$V = 240V$
$F = 50Hz$

Solution:

$$X_L = 2\pi f L$$
$$= 2 \times 3.14 \times 50 \times 0.1$$
$$\boxed{X_L = 31.42\,\Omega}$$

$$X_C = \frac{1}{2\pi f C}$$
$$X_C = \frac{1}{(2 \times 3.14 \times 50 \times 75 \times 10^{-6})}$$
$$\boxed{X_C = 42.44\,\Omega}$$

Scanned by CamScanner

$$Z = \sqrt{R^2 + (X_c - X_L)^2}$$

$$Z = \sqrt{8^2 + (42.44 - 31.42)^2}$$

$$\boxed{Z = 13.62\ \Omega}$$

Circuit current $I = \frac{V}{Z}$

$$I = \frac{240}{13.62}$$

$$\boxed{I = 17.62 \text{ Amps}}$$

Power factor $\cos\phi = \frac{R}{Z}$

$$P.F = \frac{8}{13.62}$$

$$\boxed{P.F = 0.59}$$

Power $= VI\cos\phi$

$$= 240 \times 17.62 \times 0.59$$

$$\boxed{P = 2494.992 \text{ watts}}$$

Scanned by CamScanner

(3) Determine the impedance of a RL series circuit, with R = 20 ohm and L = 0.1 H. When connected to 230V, 50Hz supply. and also find circuit current and power = ?

Solution :

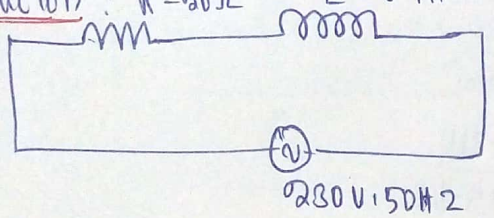

Given data

$R = 20\Omega$

$L = 0.1H$

$V = 230V$

$f = 50Hz$.

$X_L = 2\pi f L$ $\quad \left(\pi = \frac{22}{7}\right)$

$= 2 \times 3.14 \times 50 \times 0.1$

$\boxed{X_L = 31.42\Omega}$

$Z = \sqrt{R^2 + X_L^2}$

$= \sqrt{20^2 + 31.42^2}$

$\boxed{Z = 37.24\Omega}$

Circuit current $I = \frac{V}{Z} = \frac{230}{37.24}$

$\boxed{I = 6.18 \text{ Amps}}$

Power factor $(\cos\phi) = \frac{R}{Z} = \frac{20}{37.24}$

$\boxed{P.F \Rightarrow \cos\phi = 0.54}$

Power $= VI\cos\phi = 230 \times 6.18 \times 0.54$

$\boxed{P = 767.56 \text{ watts}}$

Scanned by CamScanner

5. A inductor having an inductance 0.4H and resistance of 5Ω is connected series with a capacitor across 50Hz, 230V supply. Calculate the capacitance required to give the circuit power factor 0.5 lagging.

Solution

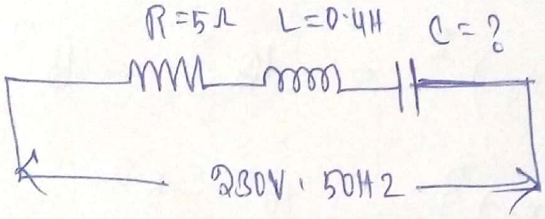

$R = 5\Omega$
$f = 50Hz$
$L = 0.4H$

To find $C = ?$

Power factor $= 0.5$ lagging.

$$X_L = 2\pi f L$$

$$X_L = 2 \times 3.14 \times 50 \times 0.4\,H$$

$$\boxed{X_L = 125.66\,\Omega}$$

$$P.F = \cos\phi = 0.5$$

$$\frac{R}{Z} = 0.5$$

$$Z = \frac{R}{0.5} = \frac{5}{0.5} = 10\,\Omega$$

$$\boxed{Z = 10\,\Omega}$$

Scanned by CamScanner

$$Z = \sqrt{R^2 + (X_L - X_C)^2}$$

$$10 = \sqrt{5^2 + (X_L - X_C)^2}$$

$$10^2 = 5^2 + (X_L - X_C)^2$$

$$(X_L - X_C)^2 = 10^2 - 5^2$$

$$(X_L - X_C)^2 = 10^2 - 5^2$$

$$= 100 - 25$$

$$(X_L - X_C)^2 = 75$$

$$X_L - X_C = \sqrt{75}$$

$$X_L - X_C = 8.66$$

$$X_L - 8.66 = X_C$$

$$125.66 - 8.66 = X_C$$

$$117 = X_C$$

$$\boxed{X_C = 117\ \Omega}$$

$$X_C = \frac{1}{2\pi f C}$$

$$C = \frac{1}{2\pi f X_C}$$

$$C = \frac{1}{(2 \times 3.14 \times 50 \times 117)} = 27.2\ \mu F$$

$$\boxed{C = 27.2\ \mu F}$$

Scanned by CamScanner

Power Triangle:

The apparent power, active power and reactive power drawn by a circuit can be represented by a right angled triangle called power Triangle

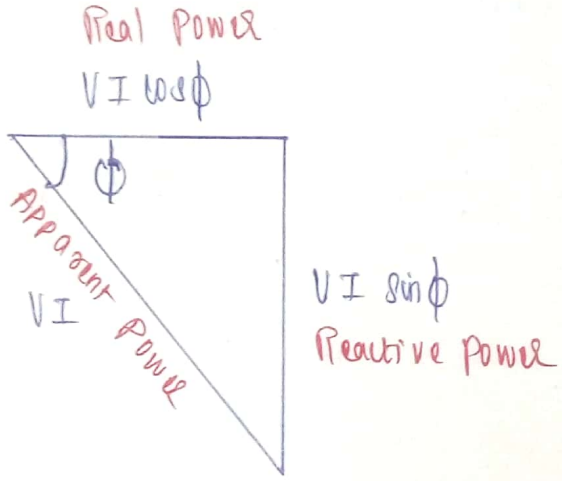

		unit	(or) in kilo unit
apparent power	= VI	VA	KVA
Active (or) Real power	= VI cosϕ	watts	Kwatts
Reactive power	= VI sinϕ	VAR	KVAR

Note:

KVA = Kilo Volt Ampere

KW = Kilo watts

KVAR = Kilo Volt Ampere Reactive.

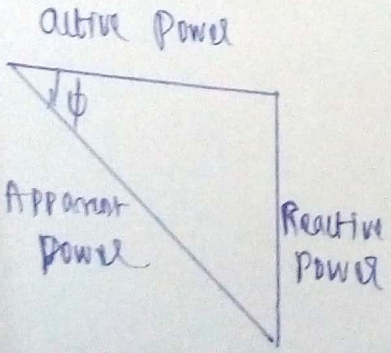

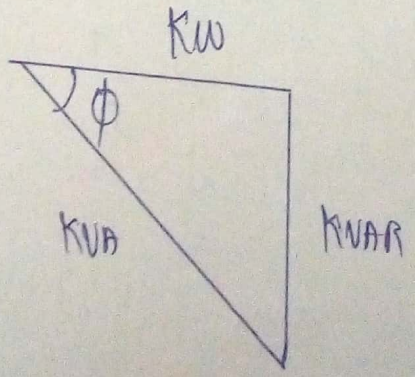

Scanned by CamScanner

From Power Triangle.

$$KVA = \sqrt{KW^2 + KVAR^2}$$

$$\text{Apparent Power} = \sqrt{\text{Active Power}^2 + \text{Reactive Power}^2}$$

$$\boxed{\text{Power factor } \cos\phi = \frac{KW}{KVA}}$$

$$P.F = \frac{\text{Real Power}}{\text{Apparent Power}}$$

(1) A machine takes 10 KW at a power factor of 0.6 from 400V supply. Calculate the total load in KVA and KVAR.

Solution.

Power = 10 KW

P.F ⇒ $\cos\phi = 0.6$

$V = 400V$

$\cos\phi = 0.6$

$\phi = \cos^{-1}(0.6)$

$\boxed{\phi = 53.13^\circ}$

$\cos\phi = \frac{KW}{KVA}$

$KVA = \frac{KW}{\cos\phi} = \frac{10}{0.6}$

$\boxed{KVA = 16.67}$

$\boxed{\text{Apparent Power} = 16.67 \text{ KVA}}$

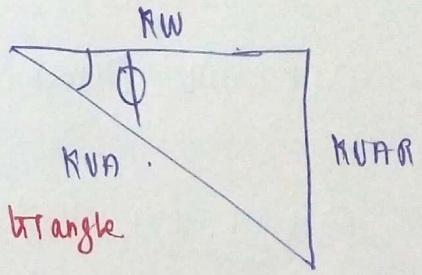

from triangle

$\sin\phi = \frac{KVAR}{KVA}$

$KVAR = KVA \sin\phi$

$= 16.67 \sin 53.13^\circ$

$KVAR = 13.33$

$\boxed{\text{Reactive Power} = 13.33 \text{ KVAR}}$

Scanned by CamScanner

DEPARTMENT OF ELECTRICAL AND ELECTRONICS ENGINEERING

SUBJECT NAME:BASIC ELECTRICAL AND ELECTRONICS ENGINEERING

UNIT-3

ELECTRONIC DEVICES

SAFETY MEASURES

1. Use approved tools, equipment’s and protective devices.
2. Do not work under poor light or when you are tired.
3. Do not work in damp areas or in wet shoes or clothes.
4. Keep tools and equipment’s clean and in good working condition.
5. Read all instructions carefully before using the appliances.
6. To prevent electrical hazards, DO NOT immerse appliances in water or Other liquids.
7. Always unplug an appliance before cleaning, or whenever it is not in use. Ensure that you pull by the plug and not the cord.
8. DO NOT operate any appliance with a damaged cord or plug.
9. Always use an appliance on a dry, level surface.
10. Keep appliances away from heated surfaces and open flames.
11. Check the electric power supply from the switch position.

TOOLS USED IN WIRING

PLIERS

- Pliers are used to cut wire and also to hold it. Pliers have an insulated handle. Long nose pliers are used to hold wires in small space and also to tighten or loose small nuts.

SCREW DRIVERS

Screw drivers are used to tighten screws in the switches and electrical machines. Screw drivers of various sizes are used. Normally screw drivers used in electrical work are insulated.

HAMMERS

- Ball peen and claw hammers are commonly used in electrical work where greater power is required striking.

- **HACKSAW**
- A hacksaw is used to cut cable armour, conduit pipes, etc. it has a frame where the blade is tightened by means of a wing nut.

LINE TESTER

A line tester is used to check the electric supply in the line or phase wire. It has a small neon bulb which indicates the presence of power supply. It can also be used as a screw driver to tighten small screws in switches.

MEASURING TAPE

- A measuring tape is used to measure the length of the wire and also to mark the positions of the switches and other electrical fittings.

- **WIRES**
- An electric wire is a copper or aluminum insulated wire and has one or more twisted stands. Vulcanized Indian Rubber (VIR) wire, cotton flexible or rubber flexible wire and poly vinyl chloride (PVC) wires are commonly used in house wiring.

TYPES OF CIRCUIT

- There are three types of circuits. They are
  - Open circuit
  - Closed circuit
  - Short circuit

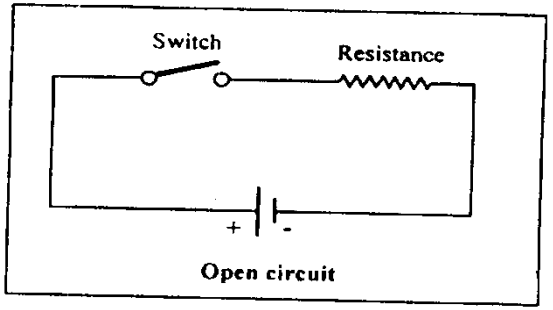

Open circuit

Open circuit

- If the switch used in the circuit is in ‘off’ position, then the circuit is said to be open circuit.
- There will not be any flow of current in open circuit.

CLOSED CIRCUIT

- If the switch used in the circuit is in ‘on’ position, then the circuit is said to be closed circuit. There will be normal flow of current in closed circuit.

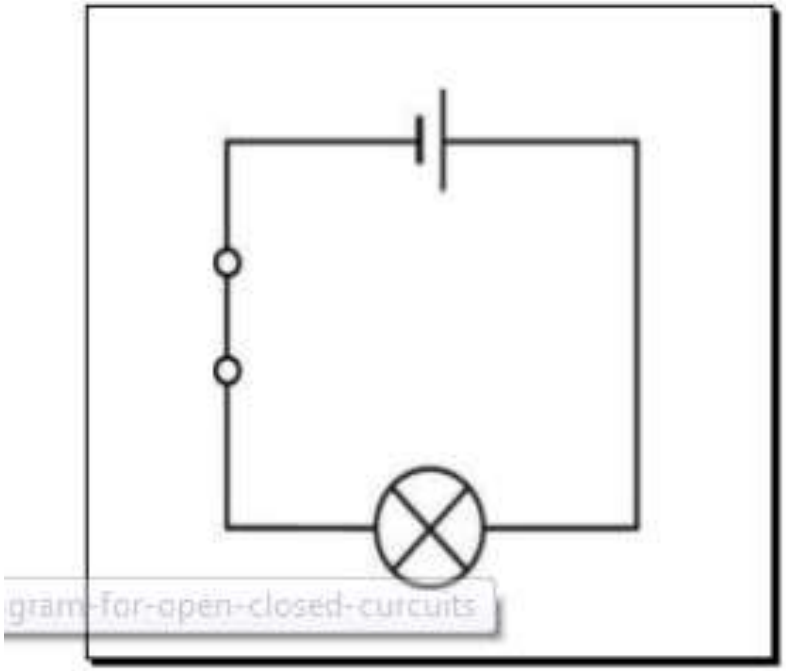
gram-for-open-closed-curcuits

SHORT CIRCUIT

- When the positive terminal and negative terminal of any circuit comes in contact and very high current flows through the circuit, then it is called as short Electrical Circuit.

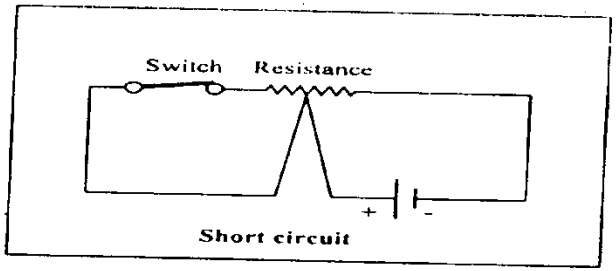

WIRING

- **WIRING METHODS**

  A circuit is a path along which the electric current flows from the negative Side of the power source to the positive side. There are three types of electrical circuit.

I. Series circuit
II. Parallel circuit
III. Combination of series and parallel circuit.

- **SERIES CIRCUIT**
- The series circuit provides a single, continuous path through which current flows. In this the devices are connected one after another and the current flows through them until it returns to the power source. Hence, even when one device breaks down the remaining devices will not operate because the circuit is broken.

SERIES CONNECTION

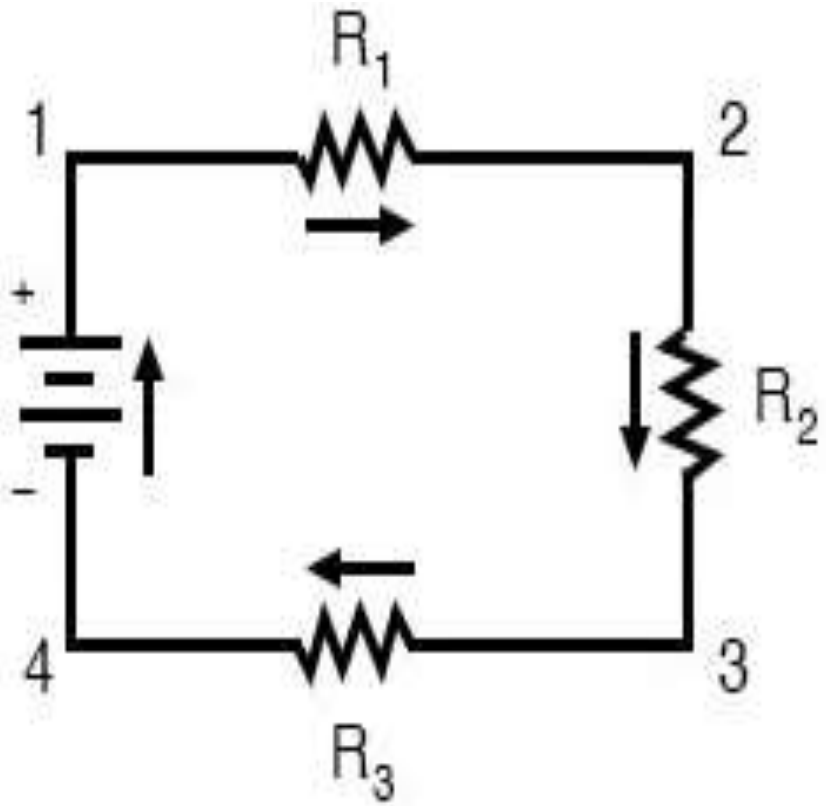

- **PARALLEL CIRCUIT**
- In parallel circuit the devices are connected side by side so that, current flows in a number of parallel path. In this type of circuit each device is connected across the power source so that even if one device breaks down, the other devices continue to operate. Hence this type of circuit is used in home wiring.

PARALLEL CONNECTION

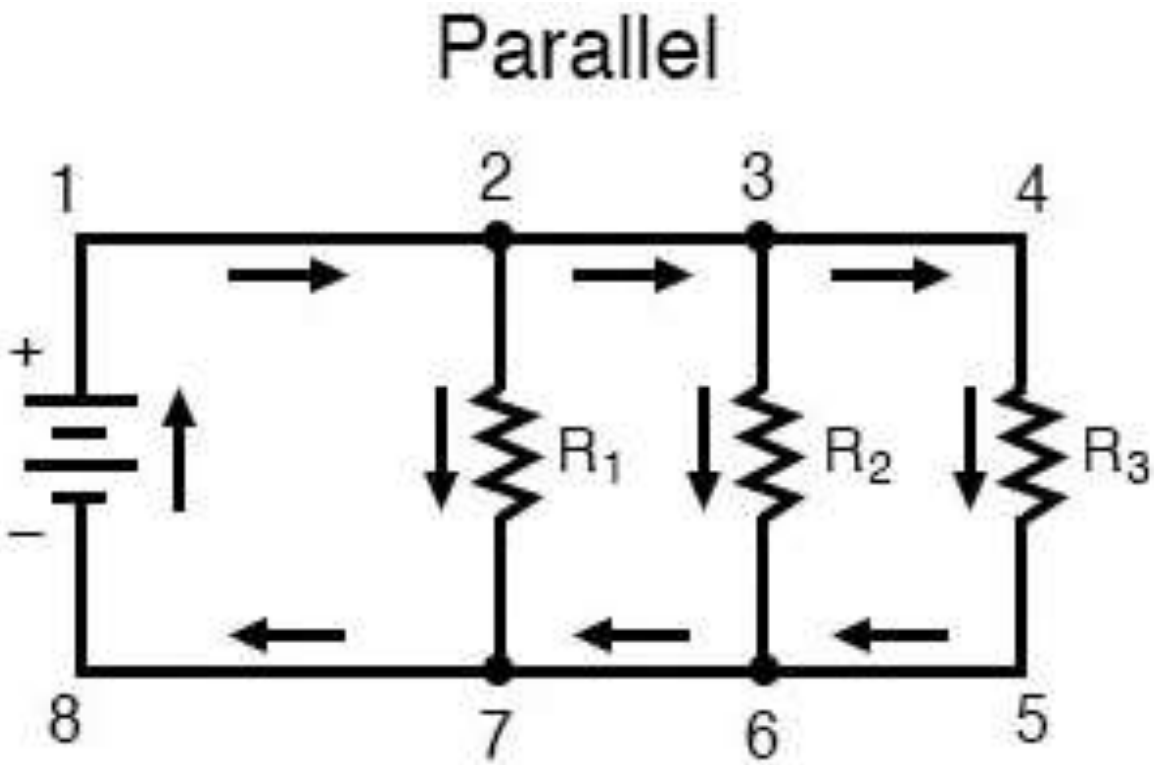

WIRING ACCESSORIES

- **Switch**
- We know that we can on and off an electrical supply with the help of a switch, which makes it one of the most common and important electrical accessory. But how does it work? An electric circuit is a pathway made up of numerous wires through which electrons can flow with the help of a power source. When the switch connected to such a circuit is switched off, a gap is created in the circuit that hinders electrons from flowing. Conversely, when the switch is turned on, the gap is closed, allowing electrons to move about and make the device work.

- **Main switch**
- This is the main on/off switch that controls the main supply that is responsible for the entire home’s power supply. In a single-phase circuit, Iron Clad Double Pole (ICDP) main switch is used; and in a three-phase circuit, Iron Clad Triple Pole (ICTP) main switch is used to control the power supply.

RTD66-100
63A

MEI
सावधान
AMEI

- ***Sockets and plugs***
- Sockets allow plugging in of appliances to attach them to the electric grid and provide power for them to run. They allow electrically operated equipment to be connected to the primary alternating current power supply in a building. These sockets differ in voltage and current rating, and shape, size, and type of connectors. Sockets used in every country are set on the country's individual national standards. To derive power from the socket into the appliance, plugs are used to be inserted into the socket, while being connected at the other end to the appliance.

- ***Lamp holder***
- As the name itself indicates, a lamp holder is used to hold the lamp. It is a device designed to connect a lamp to an electric circuit supply terminals, and support it mechanically. Depending upon the requirements and how they need to be used, lamp holders are manufactured in different designs. These include batten, angle, pendant, swivel, and bracket lamp holder.
- ***Fuse***
- Fuse in an electrical safety device that is designed to provide protection from excessive current in an electrical circuit. It contains a metal wire or strip that melts down when too much current flows through it, thus interrupting the flow of current. The fuse wire can be made of lead, tin, copper, silver, or aluminum.

- ***Circuit breaker***
- A circuit breaker is an automatically operated electrical switch that can protect an electrical circuit from damage of over-current, by disconnecting the circuit supply. Its basic function is to interrupt the flow of current after a fault is detected or when the current drawn from the circuit increases to a pre-determined value. It has the same function of a fuse, with the difference that a fuse needs to be replaces, while a circuit breaker can be simply reset by lifting the operational knob to resume normal operation.

FLUORESCENT LAMP WIRING

Aim:
To prepare wiring for a fluorescent tube light with switch control

Tools Required:
1. Screw driver 2. Hammer 3. Pliers 4. Line tester

Components Required:

1. Switch
2. Tube light with fitting
3.Joint clips
4.Wires
5.Screws
6.Switch board

diytradesupplies

Working of the Fluorescent Tube Light:

- The fluorescent lamp circuit consists of a choke, a starter, a fluorescent tube and a frame. The length of the commonly used fluorescent tube is 100 cm; its power rating is 40 W and 230V. The tube is filled with argon and a drop of mercury. When the supply is switched on, the current heats the filaments and initiates emission of electrons. After one or two seconds, the starter circuit opens and makes the choke to induce a momentary high voltage surge across the two filaments. Ionization takes place through argon and produces bright light.

- **Procedure:**
- Mark the switch and tube light location points and draw lines for wiring on the wooden board.
- Place wires along the lines and fix them with the help of clips.
- Fix the switch and tube light fitting in the marked positions.
- Complete the wiring as per the wiring diagram.
- Test the working of the tube light by giving electric supply to the Circuit

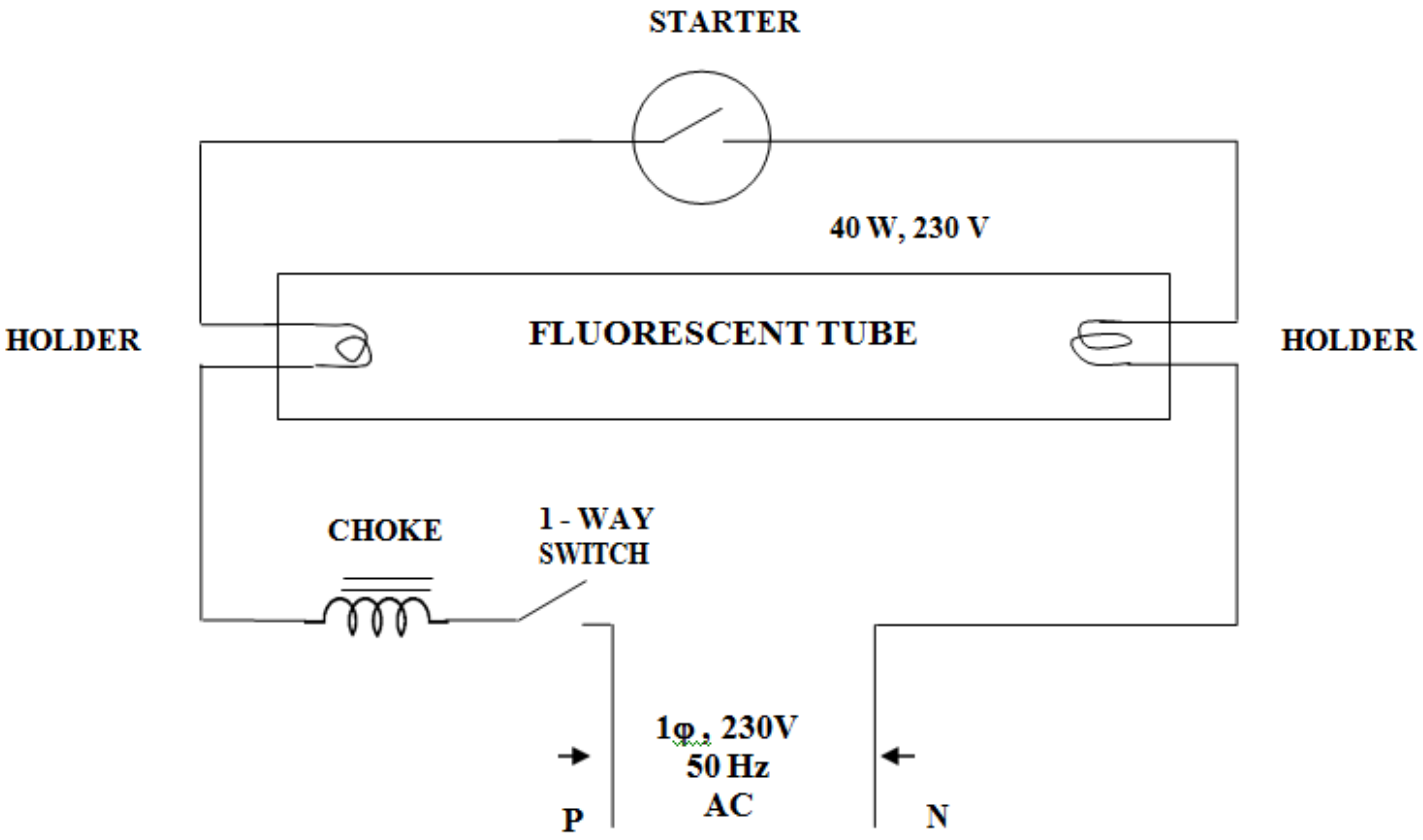
STARTER
40 W, 230 V
HOLDER
FLUORESCENT TUBE
HOLDER
CHOKE
1 - WAY
SWITCH
1φ , 230V
50 Hz
AC
P
N

- **Result:**
- The wiring for the tube light is completed and tested.

Stair Case Wiring Circuit Diagram | Godown Wiring House wiring for stair case

- Stair Case Wiring or Godown Wiring or Warehouse Wiring is a term used to denote, where a single light is controlled from Various Places. A Stair Case wiring can be used only for human comfort.
- Not only a light we can also adopt this wiring technique for some other electrical devices.

STAIR CASE WIRING

Aim:

To wire for a stair case arrangement using a two-way switch.

Tool Required:

- Screw driver 2.Hammer 3.Pliers 4.Line tester

Components Required:

1.Two-way switches

2.Bulb holders

3. Bulbs

4.Joint clips

5.Wires

6.Screws

7.Ceiling rose and

8.Switch board

Procedure

- Mark switch and bulb location points and draw lines for wiring on the wooden Board.
- Place wires along the lines and fix them with the help of clips.
- Fix the two-way switches and bulb holder in the marked position on the wooden Board.
- Complete the wiring as per the wiring diagram.
- Test the working of the bulbs by giving electric supply to the circuit.

Theory

- A two switch is installed near the first step of the stairs. The other two way switch is installed at the upper part where the stair ends. The light point is provided between first and last stair at an adequate location and height if the lower switch switches on the light. The switch at the top or vice versa can switch it off. Two number of two way switches are used for the purpose. The supply is given to the switch at the short circuited terminals. The connection to the light point is taken from the similar short circuited terminal of the second switch; other two independent terminals of each circuit are connected through cables.

CIRCUIT DIAGRAM –STAIRCASE WIRING

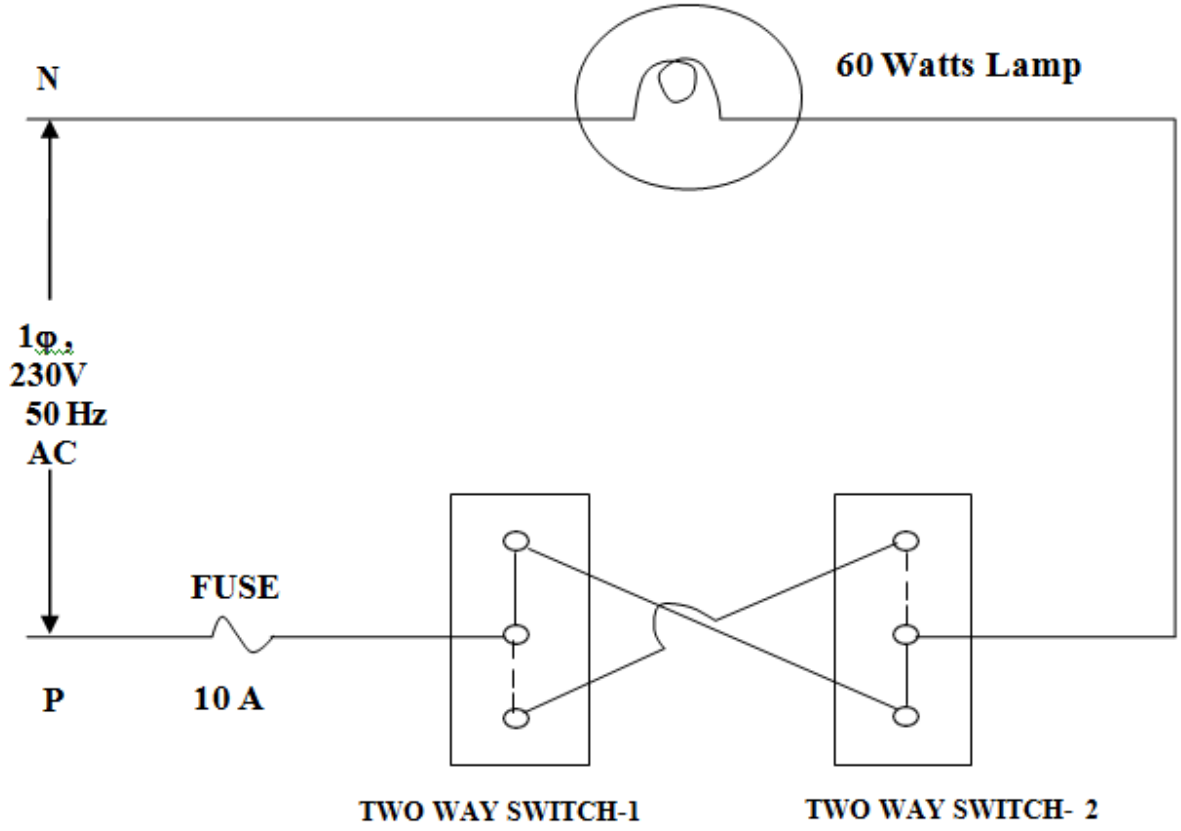

TABULATION

SWITCH POSITION		LAMP CONDITION
SWITCH- 1	SWITCH- 2	
OFF	OFF	OFF
ON	OFF	ON
OFF	ON	ON
ON	ON	OFF

LED

- **light-emitting diode** (**LED**) is a semiconductor light source that emits light when current flows through it. Electrons in the semiconductor recombine with electron holes, releasing energy in the form of photons. The color of the light (corresponding to the energy of the photons) is determined by the energy required for electrons to cross the band gap of the semiconductor.[

- LED Symbol
- Below is the demonstration of the LED symbol. The symbol is similar to that of the p-n junction diode. The difference between these two symbols is that the two arrows indicate that the diode is emitting the light.

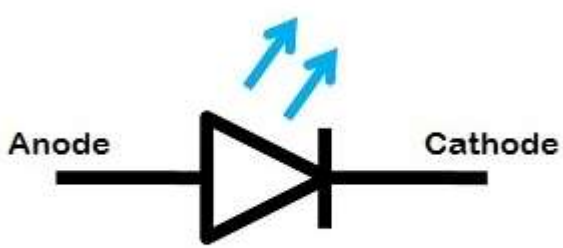

LED Symbol

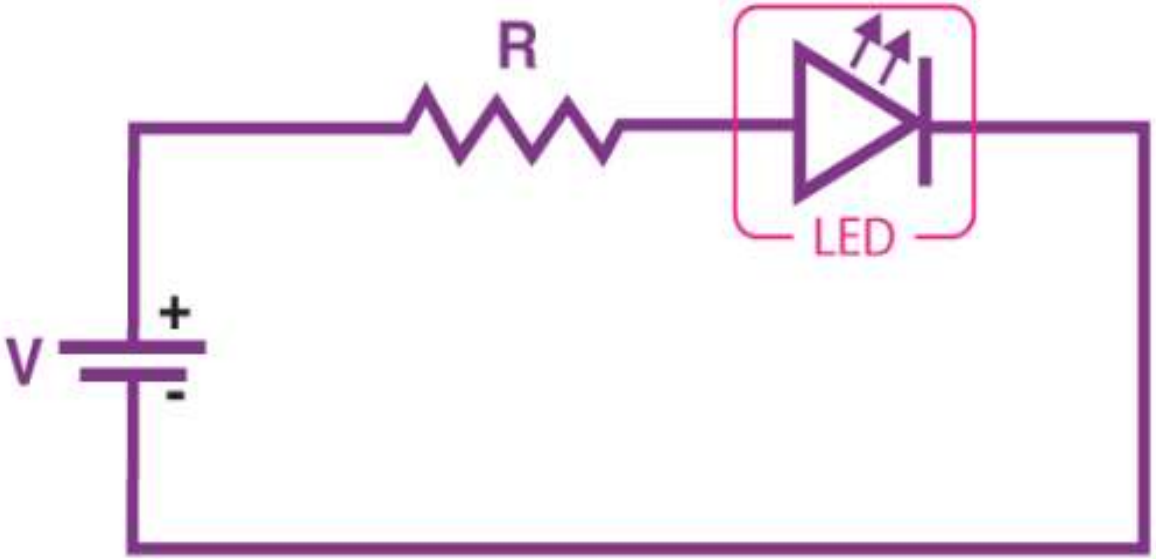

LED Circuit

- PRINCIPLE-electroluminescence

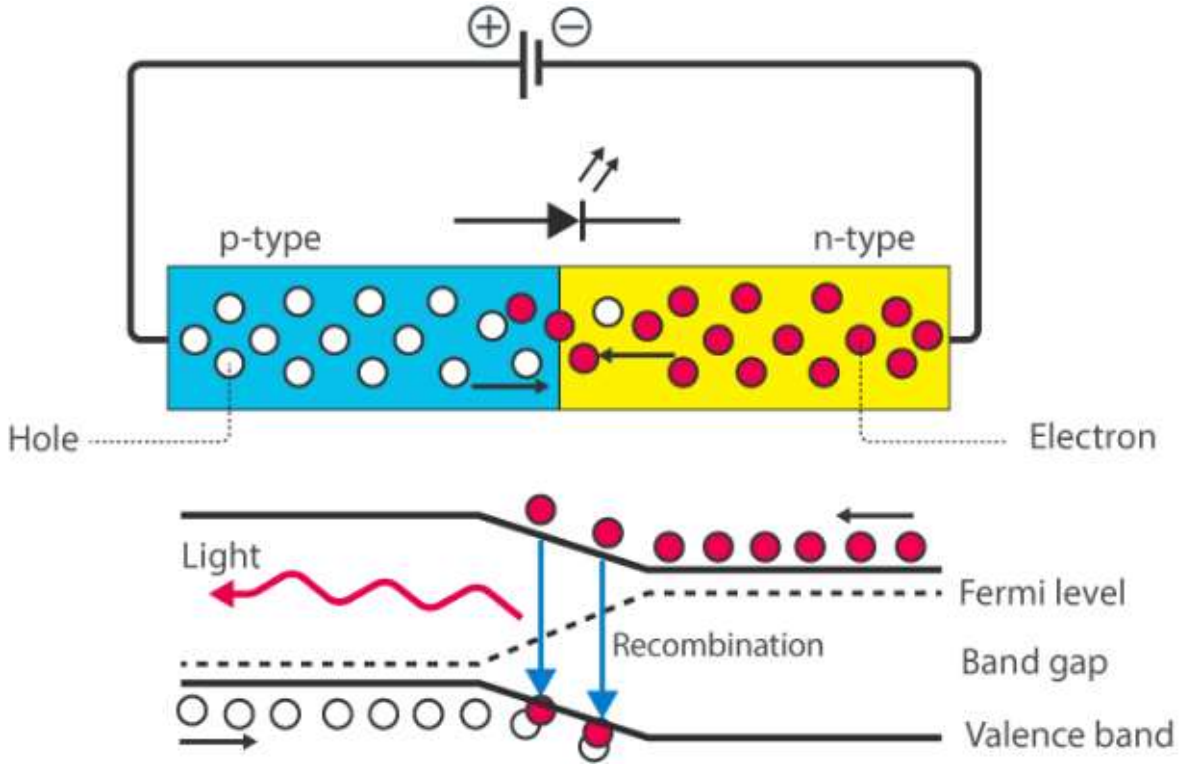

- **Working Principle of LED**
- The holes lie in the valence band, while the free electrons are in the conduction band. When there is a forward bias in the p-n junction, the electron which is a part of the n-type semiconductor material would overrun the p-n junction and join with the holes in the p-type semiconductor material. Therefore, regarding the holes, the free electrons would be at the higher energy bands. When this movement of free electron and hole takes place, there is a change in the energy level as the voltage drops from the conduction band to the valance band. There is a release of energy due to the motion of the electron. In standard diodes, the release of energy in the manner of heat. But in LED the release of energy in the form of photons would emit light energy. The entire process is known as electroluminescence, and the diodes are known as a light-emitting diode.

Uses of LED

- LEDs find applications in various fields, including optical communication, alarm and security systems, remote-controlled operations, robotics, etc. It finds usage in many such areas because of its long-lasting capability, low power requirements, swift response time, and fast switching capabilities. Below are a few standards LED uses:
-
  - Used for TV back-lighting
  - Uses in displays
  - Used in automotive
  - LEDs used in the dimming of lights

Types of LED

- Below is the list of different types of LED that are designed using semiconductors:
- Miniature LEDs
- High-Power LEDs
- Flash LED
- Bi and Tri-Colour
- Red Green Blue LEDs
- Alphanumeric LED
- Lighting LED

Electrical Earthing

- **Definition:** The process of transferring the **immediate discharge of the electrical energy directly to the earth by the help of the low resistance wire** is known as the electrical earthing. The electrical earthing is done by connecting the non-current carrying part of the equipment or neutral of supply system to the ground.

- Mostly, the galvanised iron is used for the earthing. The **earthing provides the simple path to the leakage current**. The shortcircuit current of the equipment passes to the earth which has zero potential. Thus, protects the system and equipment from damage.

Types of Electrical Earthing

- The electrical equipment mainly consists of two non-current carrying parts. These parts are neutral of the system or frame of the electrical equipment. From the earthing of these two non-current carrying parts of the electrical system earthing can be classified into two types.
- Neutral Earthing
- Equipment Earthing.

Neutral Earthing

- In neutral earthing, the neutral of the system is directly connected to earth by the help of the GI wire. The neutral earthing is also called the system earthing. Such type of earthing is mostly provided to the system which has star winding. For example, the neutral earthing is provided in the generator, transformer, motor etc.

Equipment Earthing

- Such type of earthing is provided to the electrical equipment. The non-current carrying part of the equipment like their metallic frame is connected to the earth by the help of the conducting wire. If any fault occurs in the apparatus, the short-circuit current to pass the earth by the help of wire. Thus, protect the system from damage.

Importance of Earthing

- The earthing is essential because of the following reasons
- The earthing protects the personnel from the shortcircuit current.
- The earthing provides the easiest path to the flow of shortcircuit current even after the failure of the insulation.
- The earthing protects the apparatus and personnel from the high voltage surges and lightning discharge.

Measurement

- Measurement is the process by which one can convert physical parameters into meaningful numbers. The measurement of a given quantity is the result of comparison between the quantity to be measured, and a definite standard. The instruments which are used for such measurements are called measuring instruments.
- The necessary requirements for any measuring instruments are:
- 1) With the introduction of the instrument in the circuit, the circuit, the circuit conditions should not be altered. Thus, the quantity to be measured should not get affected due to the instrument used.
- 2) The power consumed by the instruments for their operation should be as small as possible.

- **Moving Iron or MI Instrument**
- **Definition:** The **instrument** in which the **moving iron** is used for **measuring** the flow of **current or voltage** is known as the moving iron instrument. It works on the **principle** that the **iron place** near the **magnet attracts towards** it. The **force of attraction** depends on the **strength** of the **magnet field**. The magnetic field induces by the electromagnet whose strength depends on the magnitude of the current passes through it.
- **MC**==> Moving Coil type meter--->used to measure DC current and voltage.

Rectifier

- Rectifier is a electronic device which converts AC voltage into unidirectional DC voltage.

Classification of rectifier

- Half wave rectifier
- Full wave rectifier
- Bridge rectifier

Half Wave Rectifier

- In a half-wave rectifier, one half of each a.c input cycle is rectified. When the p-n junction diode is forward biased, it gives little resistance and when it is reversing biased it provides high resistance. During one-half cycles, the diode is forward biased when the input voltage is applied and in the opposite half cycle, it is reverse biased. During alternate half-cycles, the optimum result can be obtained.

HALF WAVE RECTIFIER:

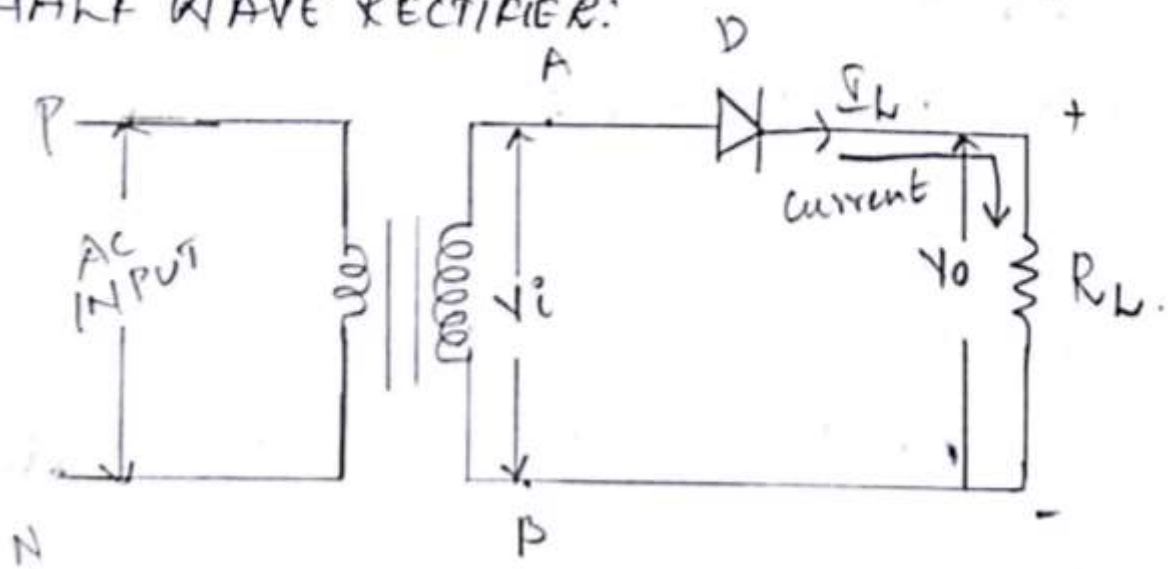

Working of Half Wave Rectifier

- The half-wave rectifier has both positive and negative cycles. During the positive half of the input, the current will flow from positive to negative which will generate only a positive half cycle of the a.c supply. When a.c supply is applied to the transformer, the voltage will be decreasing at the secondary winding of the diode. All the variations in the a.c supply will reduce, and we will get the pulsating d.c voltage to the load resistor.
- In the second half cycle, the current will flow from negative to positive and the diode will be reverse biased. Thus, at the output side, there will be no current generated, and we cannot get power at the load resistance. A small amount of reverse current will flow during reverse bias due to minority carriers.

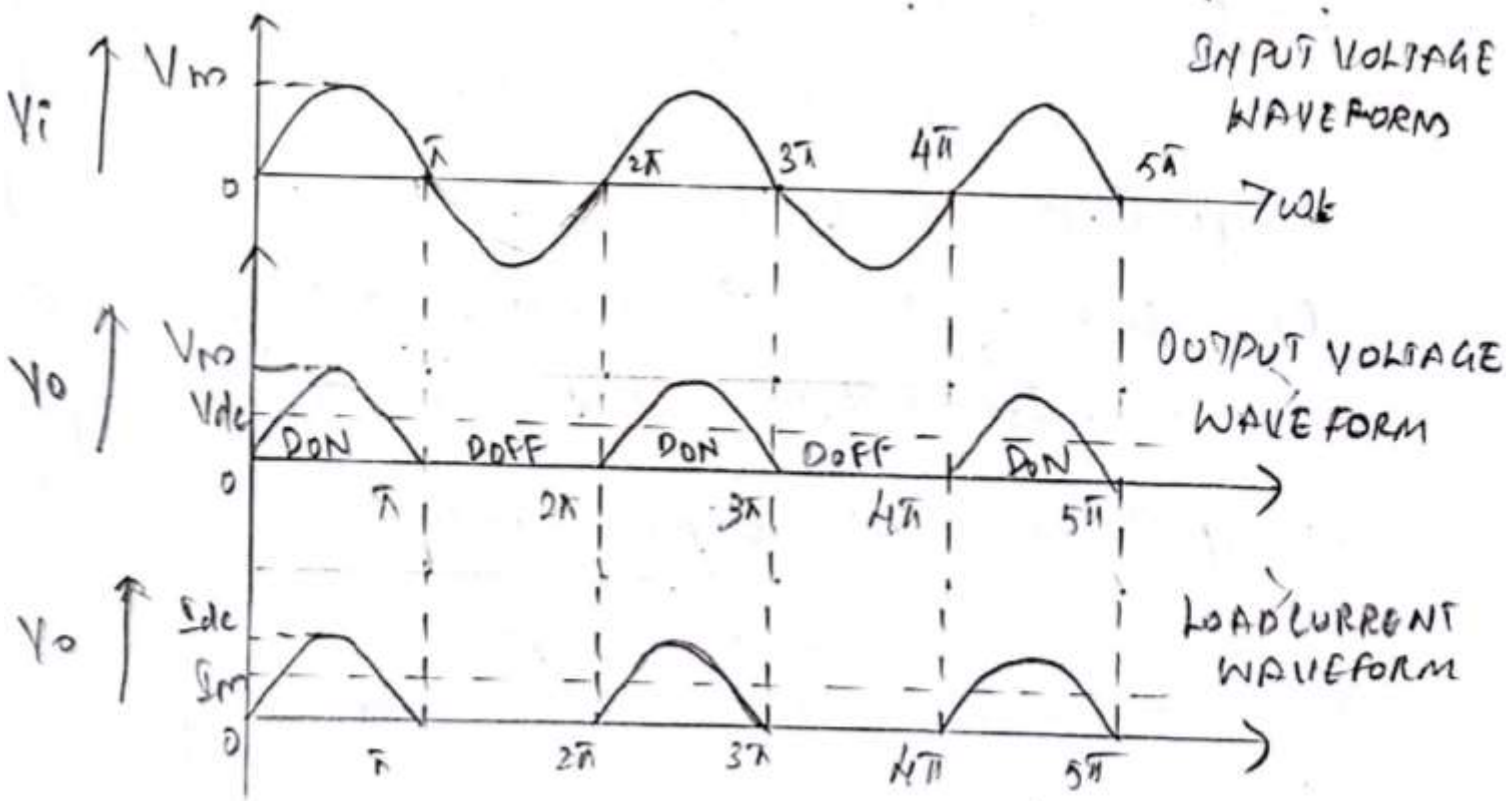
Vi
Vm
0
π
2π
3π
4π
5π
ωt
INPUT VOLTAGE WAVEFORM
Vo
Vm
Vdc
DON
DOFF
DON
DOFF
DON
OUTPUT VOLTAGE WAVEFORM
Io
Idc
Im
LOAD CURRENT WAVEFORM

- **Advantages of Half Wave Rectifier**
- Affordable
- Simple connections
- Easy to use as the connections are simple
- Number of components used are less
- **Disadvantages of Half Wave Rectifier**
- Ripple production is more
- Harmonics are generated
- Utilization of the transformer is very low
- The efficiency of rectification is low
- **Applications of Half Wave Rectifier**
- Following are the uses of half-wave rectification:
- **Power rectification:** Half wave rectifier is used along with a transformer for power rectification as powering equipment.
- **Signal demodulation:** Half wave rectifiers are used for demodulating the AM signals.
- **Signal peak detector:** Half wave rectifier is used for detecting the peak of the incoming waveform.

Full Wave Rectifier

- Full-wave rectifier circuits are used for producing an output voltage or output current which is purely DC. The main advantage of a full-wave rectifier over half-wave rectifier is that such as the average output voltage is higher in full-wave rectifier, there is less ripple produced in full-wave rectifier when compared to the half-wave rectifier.

Working of Full Wave Rectifier

- The full-wave rectifier utilizes both halves of each a.c input. When the p-n junction is forward biased, the diode offers low resistance and when it is reversing biased it gives high resistance. The circuit is designed in such a manner that in the first half cycle if the diode is forward biased then in the second half cycle it is reverse biased and so on.

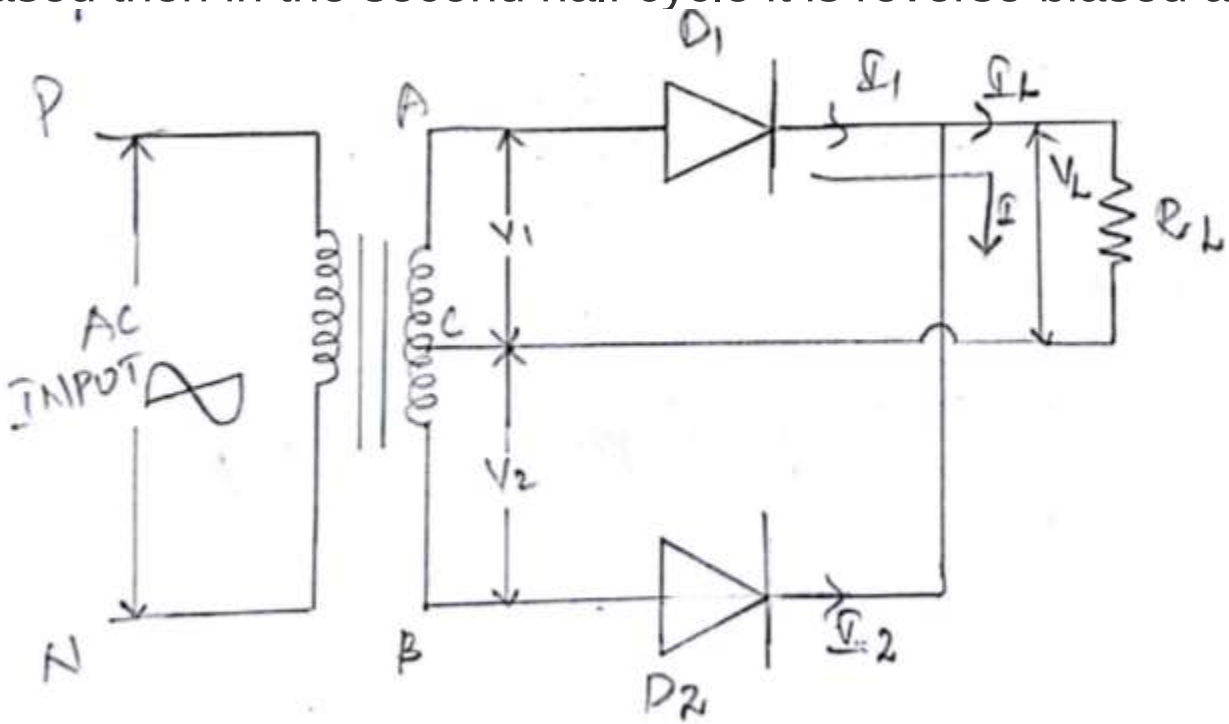

Positive half cycle and negative half cycle

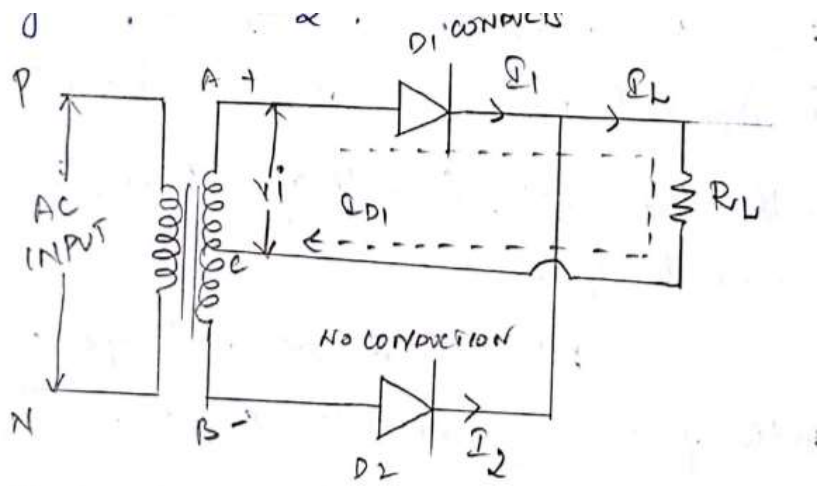

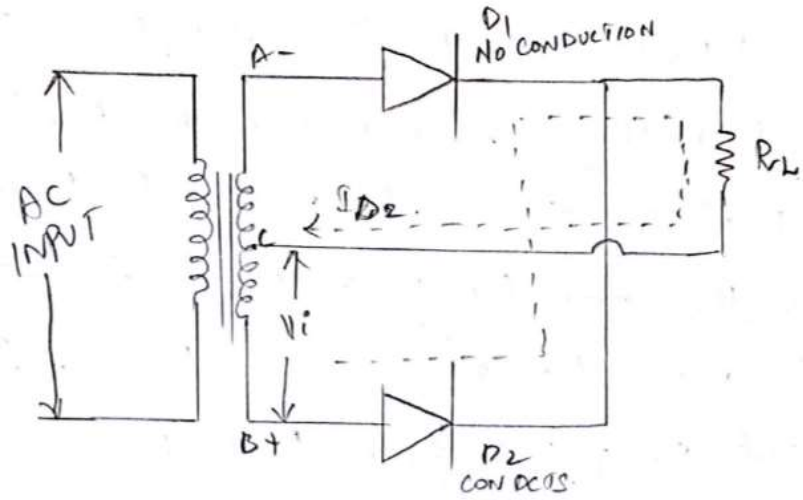

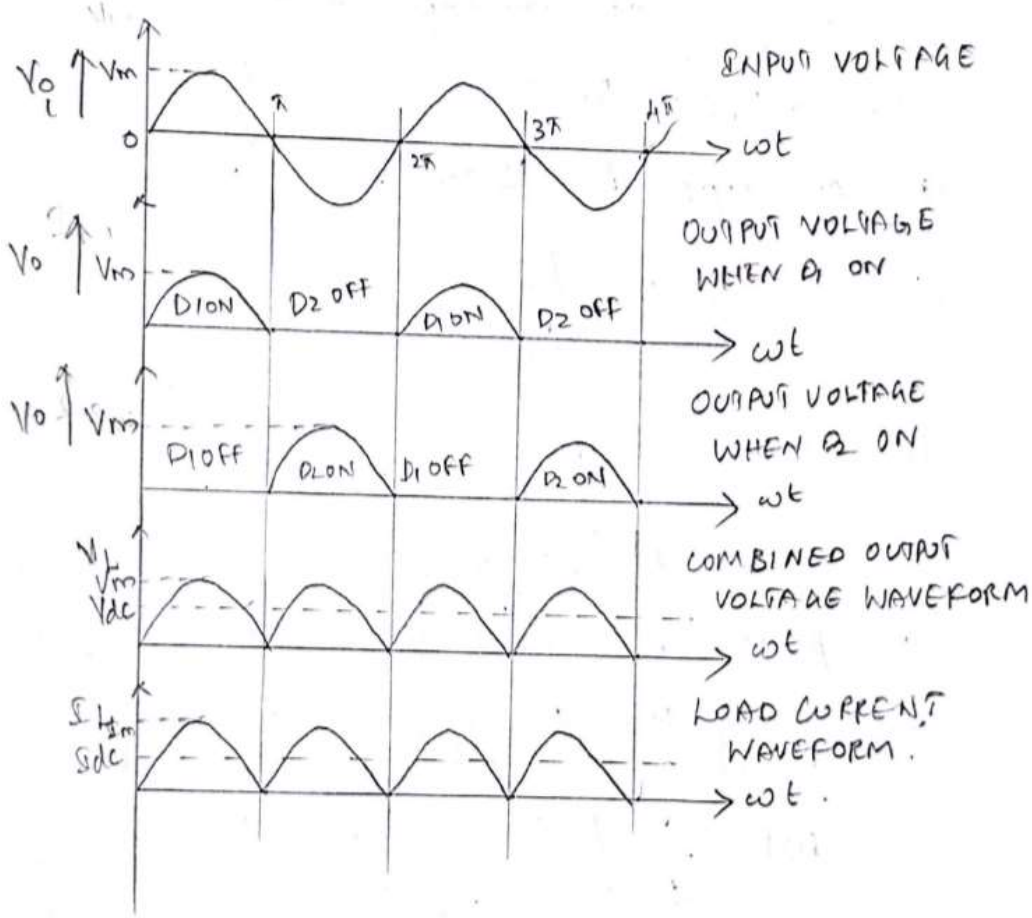
INPUT VOLTAGE
OUTPUT VOLTAGE WHEN D1 ON
OUTPUT VOLTAGE WHEN D2 ON
COMBINED OUTPUT VOLTAGE WAVEFORM
LOAD CURRENT WAVEFORM.
D1 ON
D2 OFF
D1 ON
D2 OFF
D1 OFF
D2 ON
D1 OFF
D2 ON
ωt

- **Types of Full Wave Rectifier**
- There are two main types of full-wave rectifiers, and they are:
- **Two diodes full-wave rectifier circuit** (requires a center-tapped transformer and is used in vacuum tubes)
- **Bridge rectifier circuit** (doesn’t require a centre-tapped transformer and is used along with transformers for efficient usage)
- **Advantages of Full Wave Rectifier**
- The rectifier efficiency of a full-wave rectifier is high
- The power loss is very low
- Number of ripples generated are less
- **Disadvantages of Full Wave Rectifier**
- Very expensive
- **Applications of Full Wave Rectifier**
- Following are the uses of full-wave rectifier:
- Full-wave rectifiers are used for supplying polarized voltage in welding and for this bridge rectifiers are used.
- Full-wave rectifiers are used for detecting the amplitude of modulated radio signals.

BRIDGE RECTIFIERS

- We can define bridge rectifiers as a type of full-wave rectifier that uses four or more diodes in a bridge circuit configuration to efficiently convert alternating (AC) current to a direct (DC) current. In the next few sections, let us learn more about its construction, working, and more.

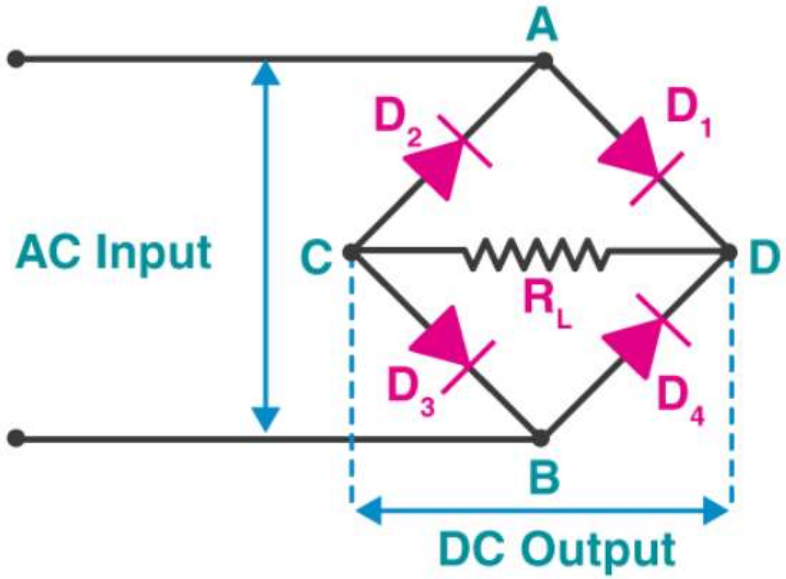

Construction

- The construction of a bridge rectifier is shown in the figure below. The bridge rectifier circuit is made of four diodes D_1, D_2, D_3, D_4, and a load resistor R_L. The four diodes are connected in a closed-loop configuration to efficiently convert the alternating current (AC) into Direct Current (DC). The main advantage of this configuration is the absence of the expensive center-tapped transformer. Therefore, the size and cost are reduced.
- The input signal is applied across terminals A and B and the output DC signal is obtained across the load resistor R_L connected between terminals C and D. The four diodes are arranged in such a way that only two diodes conduct electricity during each half cycle. D_1 and D_3 are pairs that conduct electric current during the positive half cycle/. Likewise, diodes D_2 and D_4 conduct electric current during a negative half cycle.

- Working
- When an AC signal is applied across the bridge rectifier, during the positive half cycle, terminal A becomes positive while terminal B becomes negative. This results in diodes D_1 and D_3 to become forward biased while D_2 and D_4 become reverse biased.
- The current flow during the positive half-cycle is shown in the figure below:

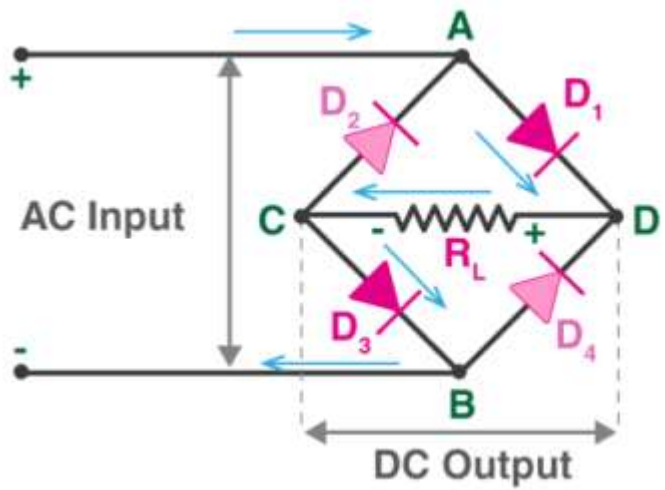

- During the negative half-cycle, terminal B becomes positive while the terminal A becomes negative. This causes diodes D_2 and D_4 to become forward biased and diode D_1 and D_3 to be reverse biased.
- The current flow during the negative half cycle is shown in the figure below:

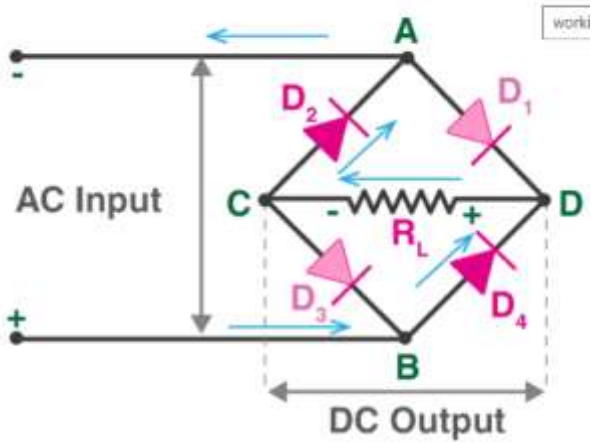

- From the figures given above, we notice that the current flow across load resistor R_L is the same during the positive half cycle and the negative half cycles. The output DC signal polarity may be either completely positive or negative. In our case, it is completely positive. If the direction of diodes is reversed then we get a complete negative DC voltage.
- Thus, a bridge rectifier allows electric current during both positive and negative half cycles of the input AC signal.
- The output waveforms of the bridge rectifier are shown in the below figure.
-

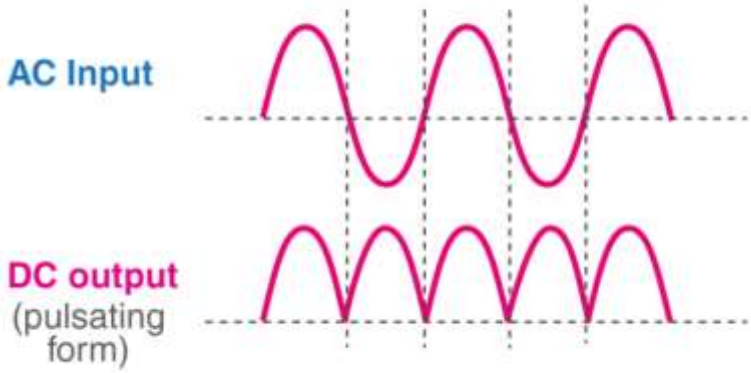

BJT

- BJT is a three-terminal device with an Emitter, collector, and a base pin, the current flow through the emitter and collector are controlled by the amount of current applied to the base.
- **Symbol of BJT Transistors**

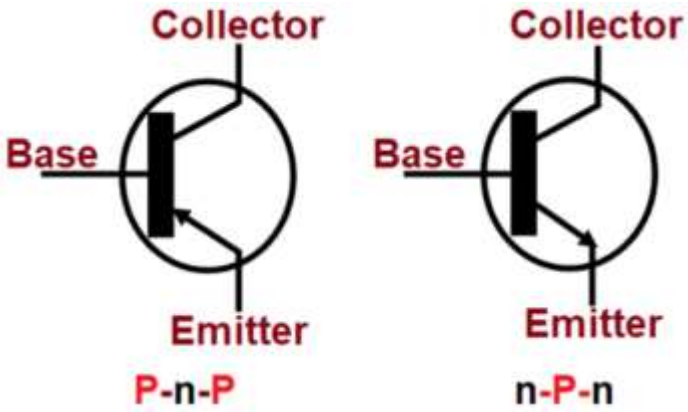

Construction and Working of BJT

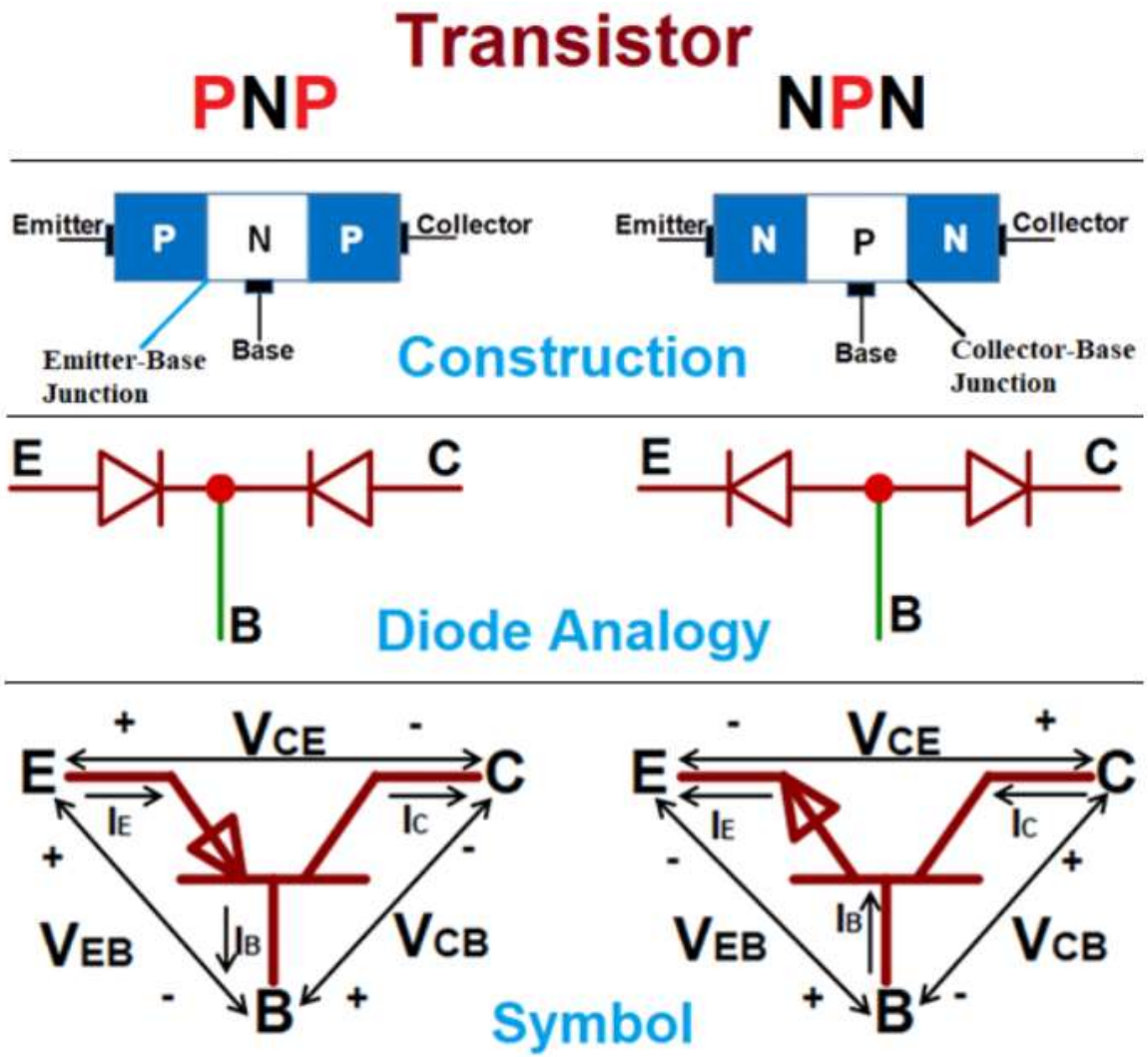

CHARACTERISTICS OF BJT

- The three **different configurations of BJT** are listed below.
- Common Base (CB) configuration
- Common Emitter (CE) configuration
- Common Collector (CC) Configuration
- Among these, the Common Base configurations will have voltage gain, but no current gain, whereas the Common Collector Configuration has current gain, but no voltage gain and the Common Emitter Configuration will have both current and voltage gain.

Common Base (CB) Configuration

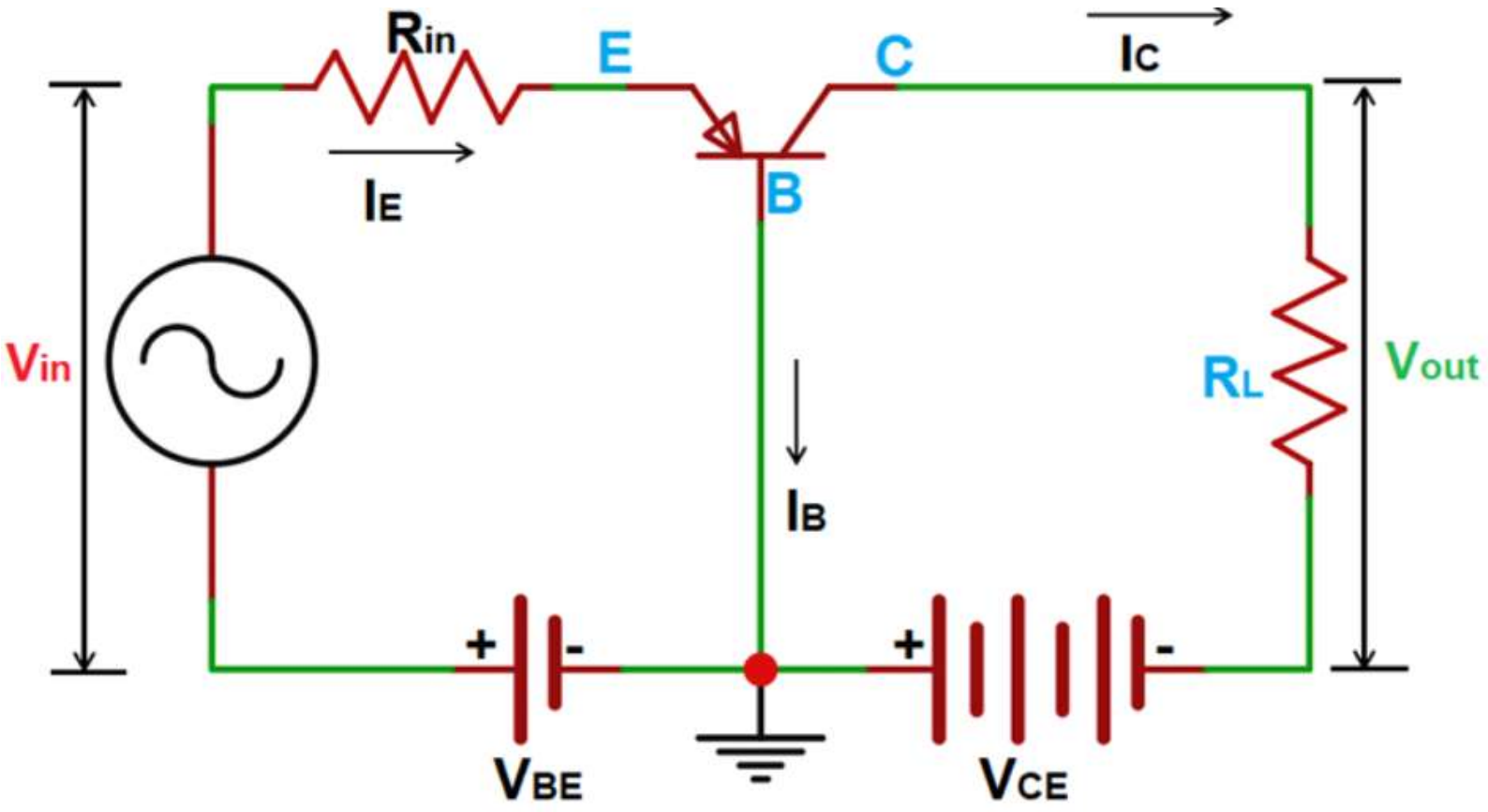

- The Common Base configuration is also called as the **grounded base configuration**, where the base of the BJT is connected as a common between both the input and output signal.
- The input to the BJT is applied across the Base and Emitter Terminals and the output from the BJT is obtained across the Base and Collector terminal.
- The input current (I_E) flowing through the emitter will be quite higher when compared with both the Base current (I_B) and the Collector Current (I_C) as the emitter current is the sum of both the Base current and Collector current.
- Since the collector current output is less than the Emitter current input the **current gain of this configuration will be unity (1) or less**.

- **INPUT CHARACTERISTICS**

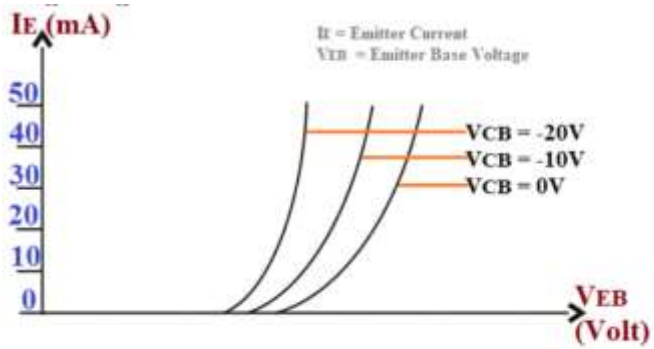

Output Characteristics

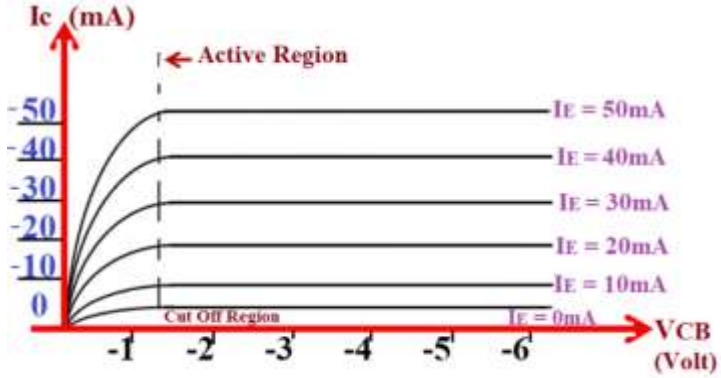

COMMON EMITTER (CE) CONFIGURATION

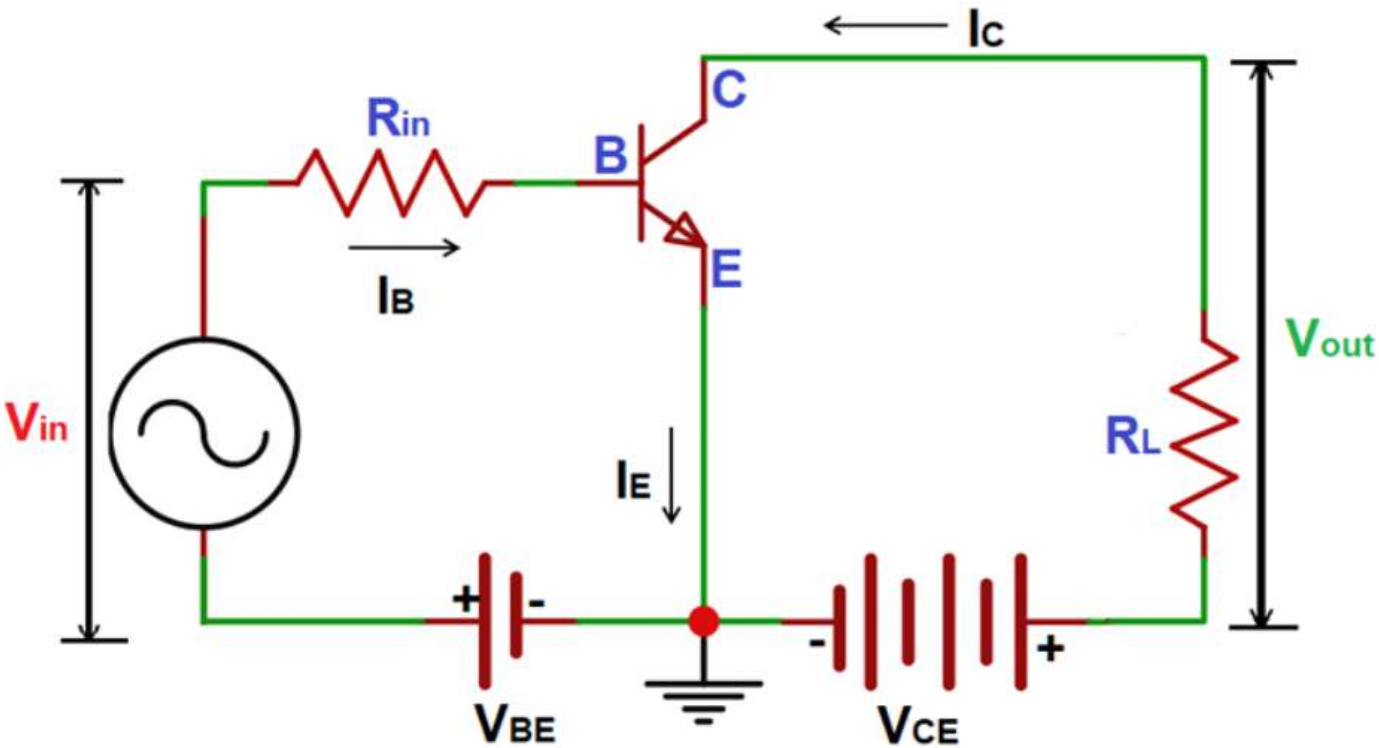

- The Common Emitter Configuration is also called the grounded emitter configuration where the emitter acts as the common terminal between the input applied between the base and emitter and the output obtained between the collector and the emitter.
- This configuration produces the **highest current and power gain** when compared with the other two types of configurations, this is because of the fact that the input impedance is low as it is connected to a forward-biased PN junction whereas the output impedance is high as it is obtained for the reverse-biased PN junction.

- **Input Characteristics**

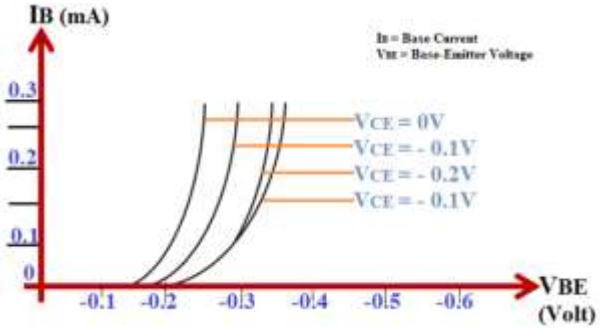

- **Output Characteristics**

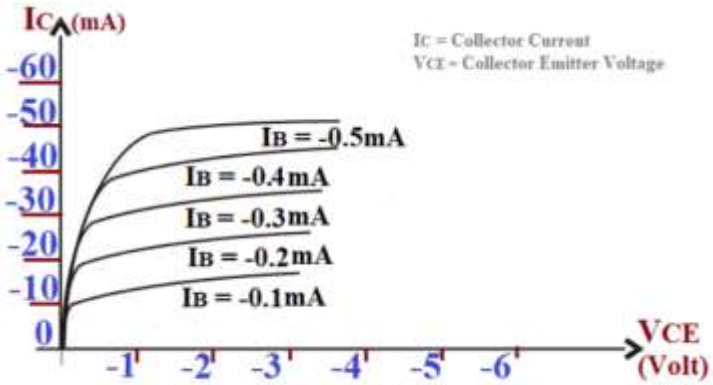

Common Collector (CC) Configuration

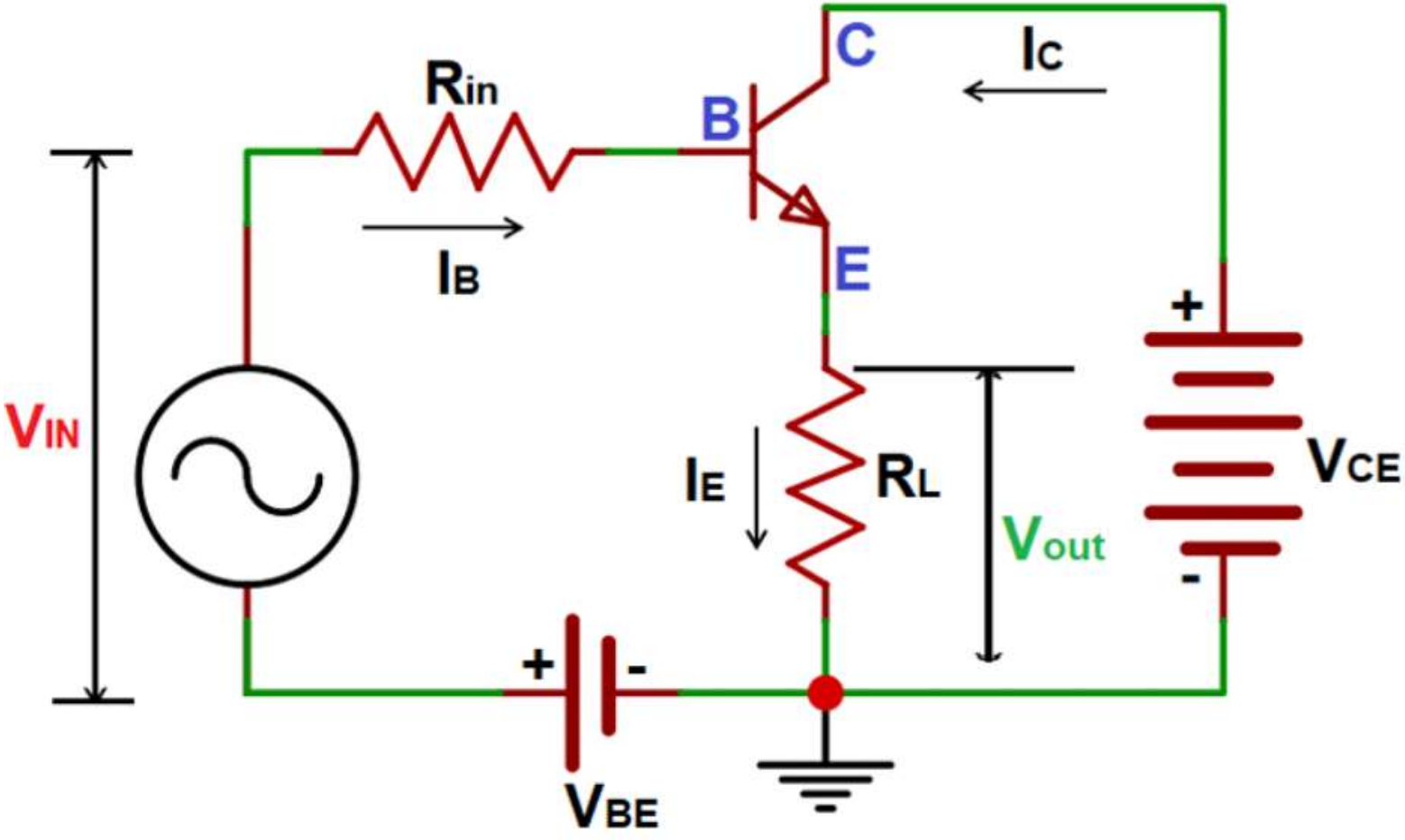

- The Common Collector Configuration is also called the grounded Collector configuration where the collector terminal is kept as the common terminal between the input signal applied across the base and the emitter, and the output signal obtained across the collector and the emitter.
- This configuration is commonly called as the **Voltage follower or the emitter follower circuit**. This configuration will be useful for **impedance matching applications** as it has very high input impedance, in the region of hundreds of thousands of ohms while having relatively low output impedance.

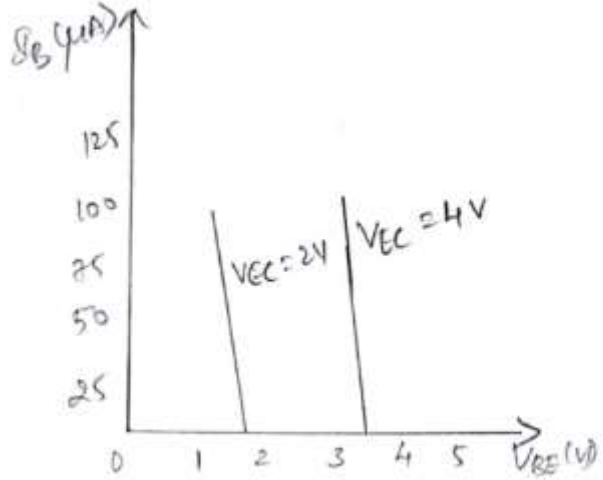

INPUT CHARACTERISTICS of CC.

OUTPUT CHARACTERISTICS:

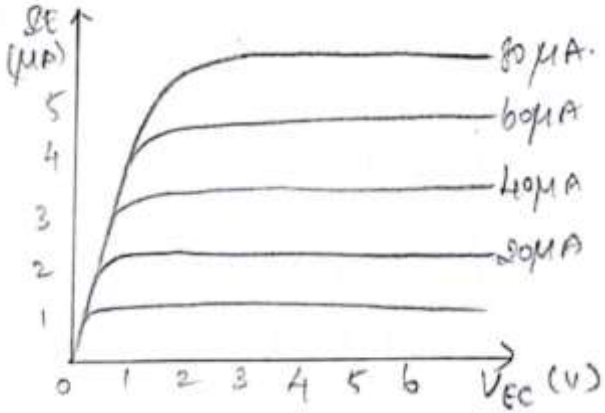

- A field effect transistor is a voltage controlled device i.e. the output characteristics of the device are controlled by input voltage. There are two basic types of field effect transistors:

1. Junction field effect transistor (JFET)
2. Metal oxide semiconductor field effect transistor (MOSFET)

Junction Field Effect Transistor (JFET)

- A JFET consists of a p-type or n-type silicon bar containing two pn junctions at the sides as shown in fig.

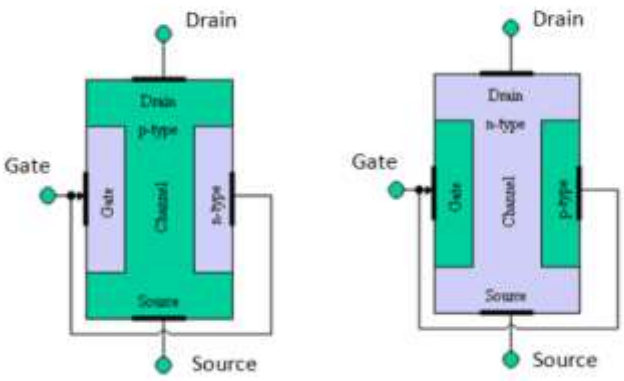

JFET Polarities

(i) shows the n-channel JFET polarities and (ii) shows the p-channel JFET polarities.

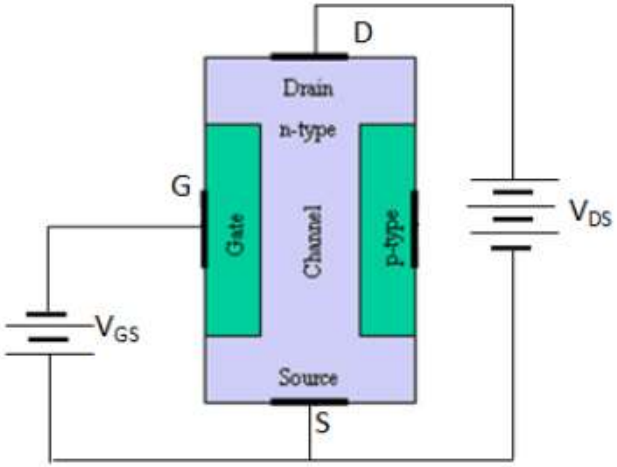

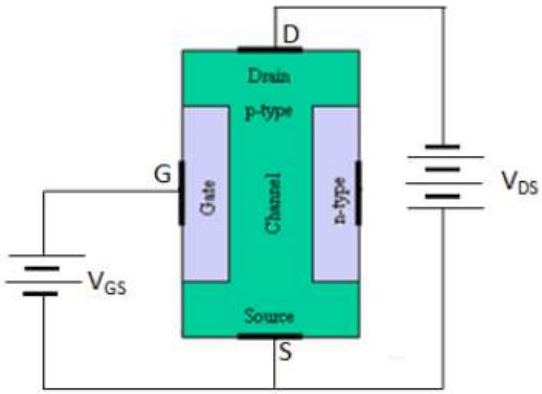

Working of JFET

- The working of JFET can be explained as follows:
- **Case-i:**
- When a voltage V_{DS} is applied between drain and source terminals and voltage on the gate is zero as shown in fig., the two pn junctions at the sides of the bar establish depletion layers.

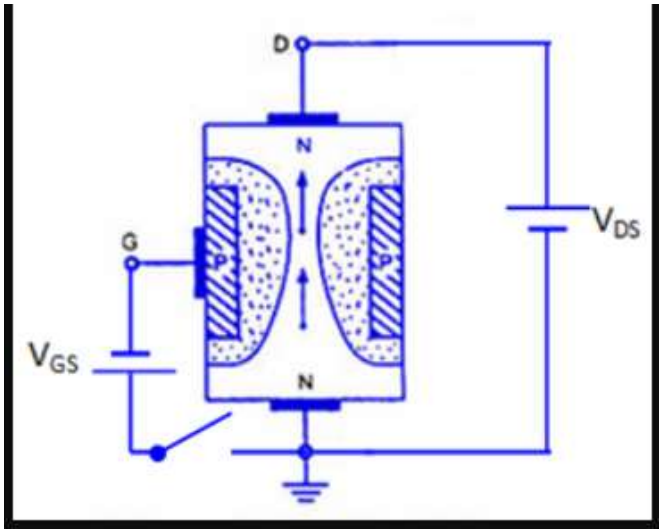

- **Case-ii:**
- When a reverse voltage V_{GS} is applied between gate and source terminals, as shown in fig.3(ii), the width of depletion layer is increased.

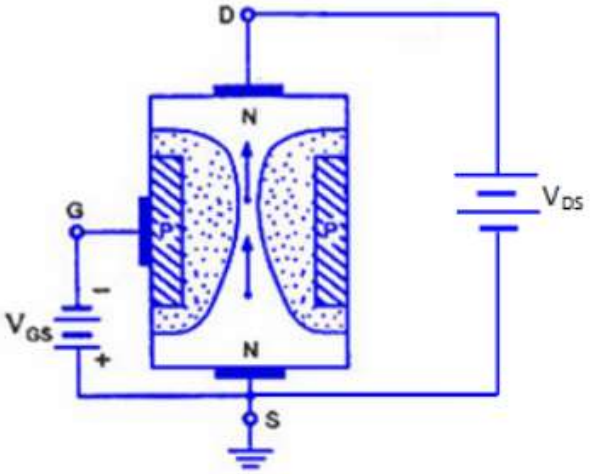

MOSFETs

- There is a field effect transistor that can be operated to enhance the width of the channel i.e. it can have enhancement-mode operation. Such a FET is called MOSFET.

Types of MOSFETs

1. *Depletion-type MOSFET or D-MOSFET:* The D-MOSFET can be operated in both depletion mode and the enhancement mode. For this reason it is also called depletion/enhancement MOSFET.
2. *Enhancement-type MOSFET or E-MOSFET:* The E-MOSFET can be operated only in enhancement mode.

- **Symbols for D-MOSFET**
- There are two types of D-MOSFETs such as :

1. n-channel D-MOSFET
2. p-channel D-MOSFET

n-channel D-MOSFET

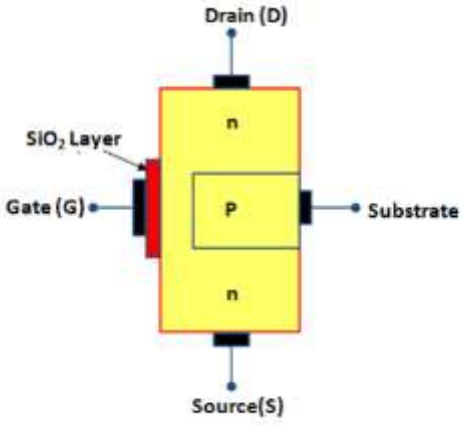

- **p-channel D-MOSFET**

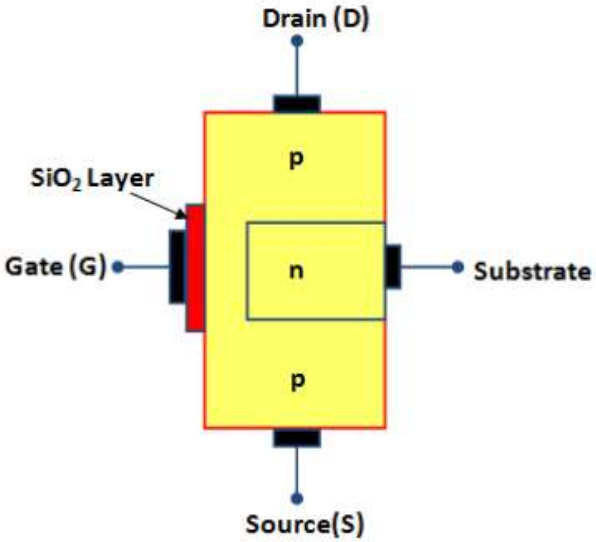

Circuit Operation of D-MOSFET

- The gate forms a small capacitor. One plate of this capacitor is the gate and the other plate is the channel with metal oxide layer as the dielectric.
- When gate voltage is changed, the electric field of the capacitor changes which in turn changes the resistance of the n-channel.
- Since the gate is insulated from the channel, we can apply either negative or positive voltage to the gate.
- The negative gate operation is called *depletion mode* and positive gate operation is called *enhancement mode*.

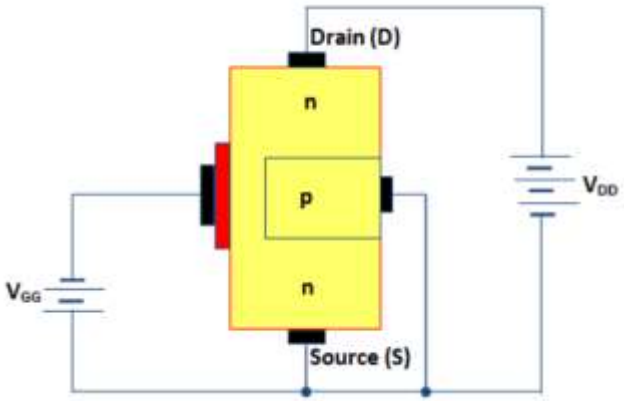

- **Symbols for E-MOSFET**
- (i) shows the schematic symbols for n-channel E-MOSFET and Fig (ii) shows the schematic symbol for p-channel E-MOSFET.

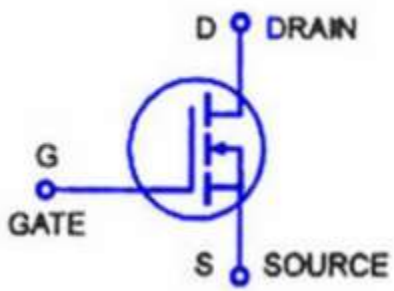

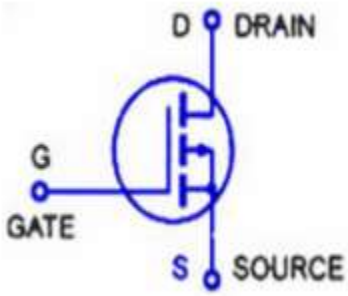

Circuit Operation of E-MOSFET

- (i) **When V_{GS}= 0V,** as shown in fig., there is no channel connecting source and drain.
- The p-substrate has only a few thermally produced free electrons(minority carriers) so that drain current is almost zero. For this reason, E-MOSFET is normally OFF when V_{GS} = 0V.

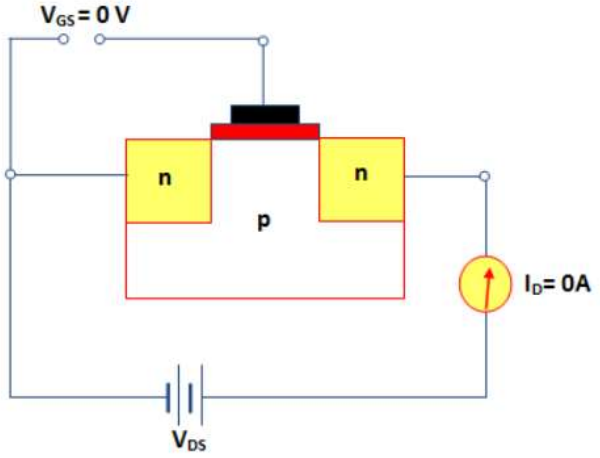

- **When V_{GS} is positive**, i.e gate is made positive as shown in fig(ii), it attracts free electrons into the p region. The free electrons combine with the holes next to the SiO2 layer.

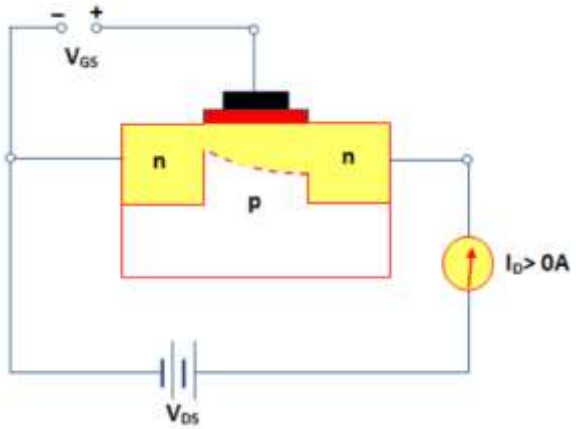

- (iii) **When V_{GS} is less than $V_{GS(th)}$**, there is no induced channel and the drain current $I_D$is zero.

Unit - II

Electrical Machines

Construction, Principle of Operation, Basic equations and applications - D.C generators and D.C Motors - 1ϕ induction Motor - single Phase transformer.

DC Machines

- DC motor
- DC generator

D.C generator:

↳ A generator is a rotating machine which converts mechanical energy into electrical energy.

Principle: Faraday's Law of electromagnetic induction

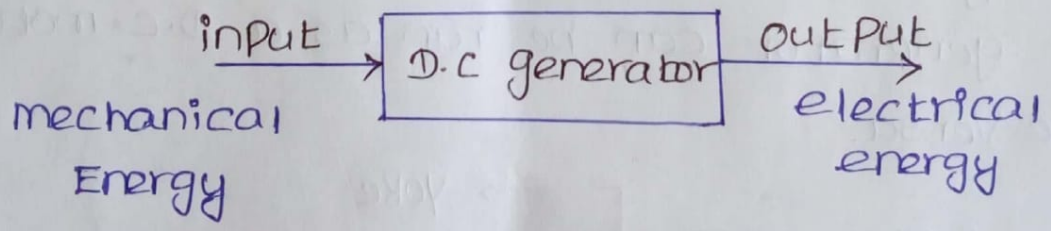

Faraday's Law:

↳ "whenever a conductor is moved in a magnetic field dynamically induced e.m.f (electro motive force) is produced in the conductor

↳ The direction of induced e.m.f is given by Fleming's right hand rule.

Scanned by CamScanner

Flemings right hand rule:

↳ "Hold out the right hand with the first finger (fore finger), second finger (middle finger) and thumb at right angle to each other. If forefinger represents the direction of flux, the thumb points in the direction of motion or applied force, then middle finger points in the direction of induced emf.

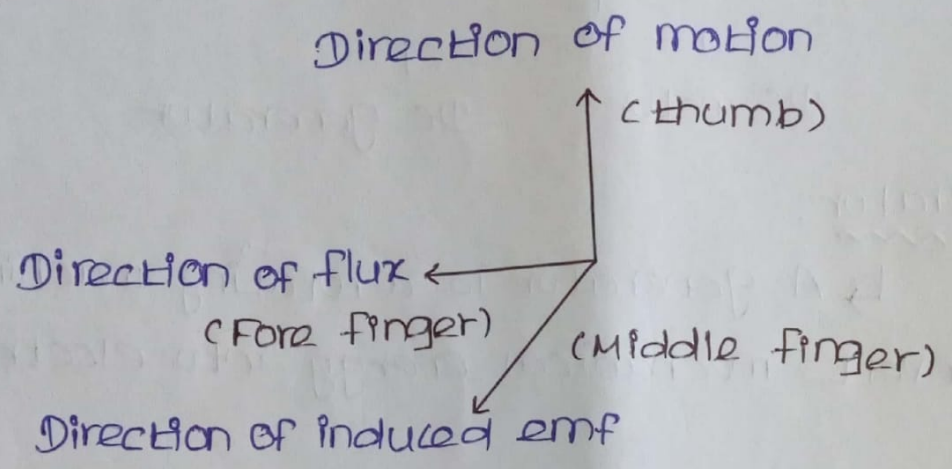

Construction of D.C generator:

↳ D.C generator and D.C motor having the same general construction, any D.C generator can be run as a D.C motor and vice versa.

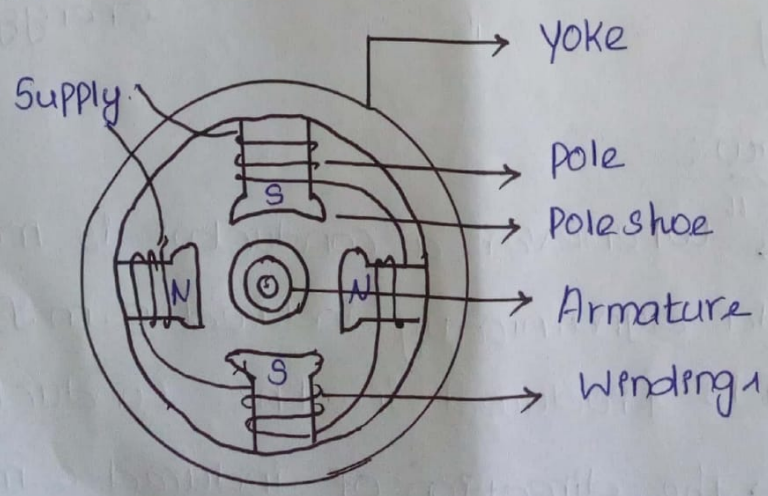

Construction of a D.C generator

Scanned by CamScanner

major Parts:

1. magnetic Frame (or) yoke
2. Pole, interpoles, windings, Pole shoes
3. Armature
4. Commutator
5. Brushes, bearings and shaft

magnetic Frame (or) yoke:

1. It act as a protecting cover for the whole machine and provides mechanical support for the poles
2. It carries the magnetic flux produced by the poles.
3. The yoke is made up of cast iron.

Poles:

Poles consist of,

i) Pole cores
ii) Pole shoes
iii) Pole coils

Very small machines the Poles are made up of cast iron
larger machines → cast steel

Pole coils are made up of copper wire or strip.

↳ The flux distribution through the pole, airgap, armature core and yoke.

Scanned by CamScanner

1. They spread out the flux in the airgap. 2. They support the field coils.

Interpoles:

↳ In large size D.C generator interpoles are provided.

↳ The function of these poles is to improve commutation and to reduce the armature reaction.

Armature:

The armature consists of an,

i) armature core

ii) armature winding

↳ The armature core is keyed to the machine shaft and it rotates between the field poles.

↳ It consists of slotted steel laminations (about 0.4 to 0.6mm thick)

↳ The laminations are insulated from each other by thin coating of varnish.

Purpose of laminating the core → To reduce the eddy current loss

↳ Armature winding is wound in two ways.

1. Lap winding - for low voltage high current machin
2. wave winding - for high voltage low current machine

Scanned by CamScanner

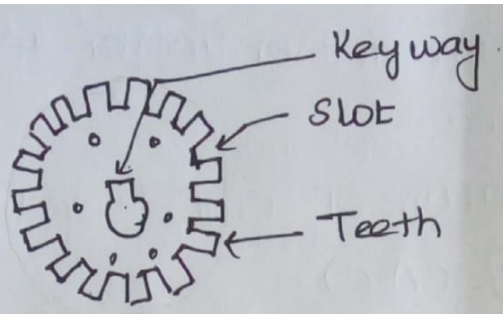

[Laminations are stacked to form a cylindrical core]

Commutator:

↳ The commutator converts the alternating emf into unidirectional or direct emf.

↳ It is made up of copper and insulated by mica.

Brushes and bearings:

↳ The brushes are made up of carbon (or) graphite, collect the current from the commutator. It is rectangular in shape.

Principle of operation of D.C generator

↳ whenever a conductor cuts the magnetic flux, dynamically emf is induced in it, according to faraday's law of electromagnetic induction

↳ This emf causes a current to flow, if the conductor circuit is closed.

↳ A stationary magnetic field is produced by field magnet.

↳ The armature consisting of conductor is rotated inside the magnetic field by a prime mover.

Scanned by CamScanner

↳ The Prime mover mover may be a turbine (or) Diesel engine.

↳ The nature of emf is induced in the armature is alternating (A.C)

↳ A.C e.m.f is converted into Unidirectional emf (D.C) by means of Commutator.

↳ The Commutator is rotated along with the armature.

↳ The method of producing emf in a simple Loop generator explained with the help of figure.

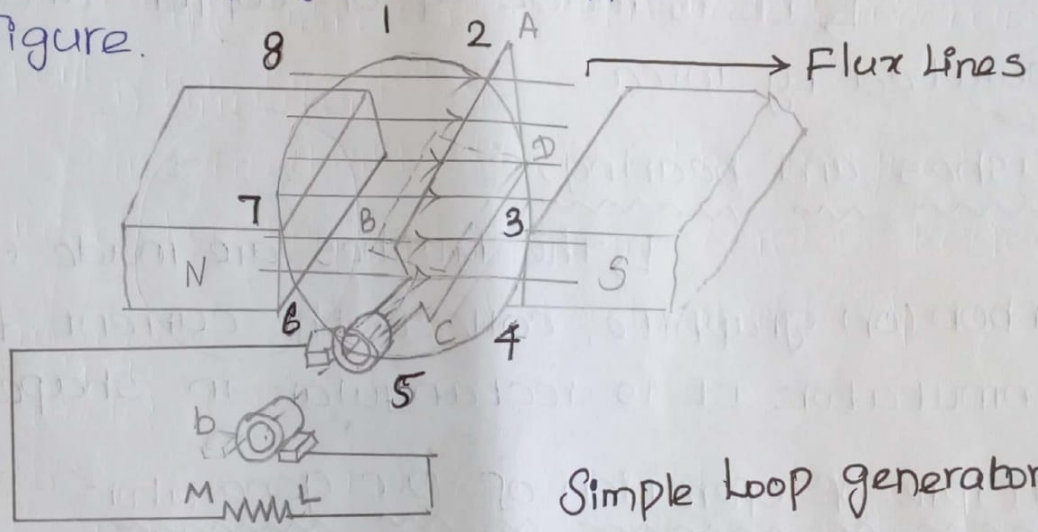

Simple Loop generator

copper coil : ABCD (moving in a magnetic field)

↳ The two ends of the coil are joined to two slip rings 'a' and 'b'. These sliprings are insulated.

↳ when the Coil rotate inside the magnetic field the flux linked with the coil Changes and hence emf is induced in the coil, which is proportional to the rate of change of flux linkage

↳ Assume the coil rotating in clockwise direction. when the Plane of the coil is at right angles to the flux lines.

Scanned by CamScanner

Position : 1 ($\theta = 0^\circ$)

The flux link with the coil : Maximum

The rate of change of flux linkage : Minimum

↓

(because coil does not cut any flux lines)

$\boxed{\therefore \text{ no emf is induced in the coil at Position 1}}$

Position : 3 ($\theta = 90^\circ$)

coil plane is horizontal to the flux line (1 to 3

The flux linked with the coil : Minimum

The rate of change of flux linkage : Maximum

↓

(coil cut the flux lines)

$\boxed{\text{maximum e.m.f is induced in the coil at Position 3}}$

Position : 5 ($\theta = 180^\circ$) (Position 3 to 5)

The flux linked with the coil : Maximum

The rate of change of flux linkage : Minimum

$\boxed{\therefore \text{ no emf is induced in the coil at position 5}}$

Position : 7 ($\theta = 270^\circ$) (position 5 to 7)

The e.m.f induced in the coil is reverse direction

The e.m.f induced is -ve maximum

Position : 7 to 1 ($\theta = 360^\circ$)

The flux links with the coil : increases

The rate of change of flux linkage : decreases

Scanned by CamScanner

The e.m.f induced is zero at position 1

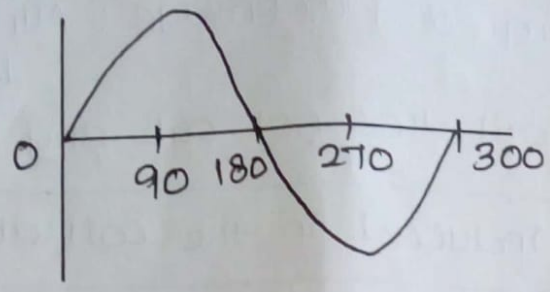

So, thus the emf induced in the coil is an alternating emf. It is shown in figure.

↳ The A.C current in the coil is converted into unidirection current due to rectifying action of split rings (also called as commutator)

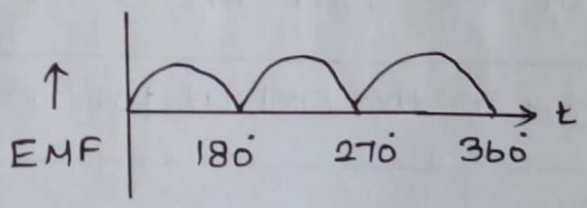

↳ To minimise the ripple in D.C current the no. of coils in the armature should be increased

Types of D.C generator:

D.C generator
- Separately excited D.C generator
- Self excited D.C generator
  - Series generator
  - Shunt generator
  - Compound generator
    - Short shunt
    - Long shunt
    - Differential
    - cumulative

Scanned by CamScanner

Separately excited D.C generator

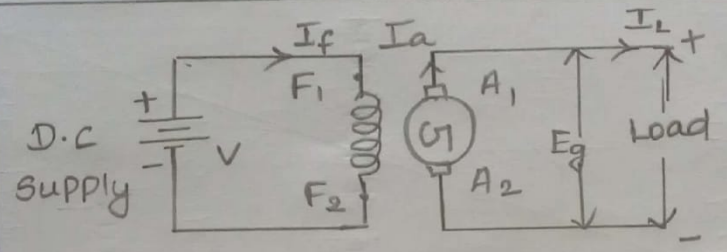

If the field winding is supplied from an independent external source is called as separately excited D.C generator.

Armature Current $I_a = I_L$

Electric Power developed $= E_g I_a$.

Self excited D.C generator

If the field winding of the generator is supplied from the armature of the generator itself. Here, $I_a \rightarrow$ armature current

$I_L \rightarrow$ Load current

$I_{sh} \rightarrow$ shunt field current

DC Shunt generator

The field winding is connected in parallel with the armature winding.

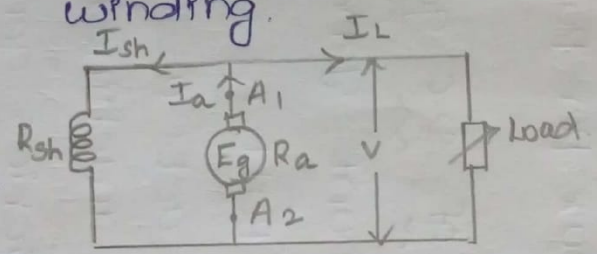

$I_a = I_L + I_{sh}$

$I_{sh} = V / R_{sh}$

DC Series generator

The field winding is connected in series with the armature winding.

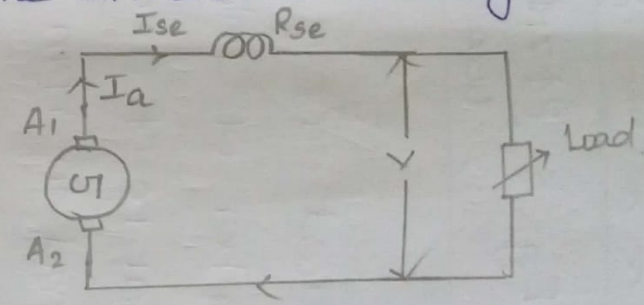

$I_a = I_{se} = I_L$

D.C Compound generator

Two sets of field winding one is in series and other one in parallel with the armature.

Long Shunt generator

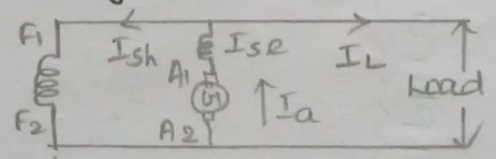

$I_a = I_{se} = I_L + I_{sh}$

Short Shunt generator

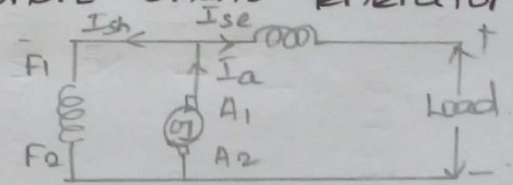

$I_{se} = I_L + I_{sh}$, $I_a = I_{se} + I_{sh}$

Scanned by CamScanner

EMF equation of a D.C generator:

$$E_g = \frac{P\phi ZN}{60A} \text{ (volts)}$$

where

E_g → induced emf in generator

P → Number of poles

Z → Total no of conductors in armature

N → speed in rpm

A → No of parallel path

ϕ → flux per pole in wb.

Applications of D.C generator:

1. Shunt generator
   i) Battery chargers
   ii) acts as a exciter for synchronous machines
2. Series generator
   i) Booster in transmission lines
   ii) Traction applications.
3. Compound generator
   i) Voltage regulators
   ii) Compensation for control system applications.

Scanned by CamScanner

D.C motor

Introduction:

↳ A D.C motor is a machine which converts electrical energy into mechanical energy.

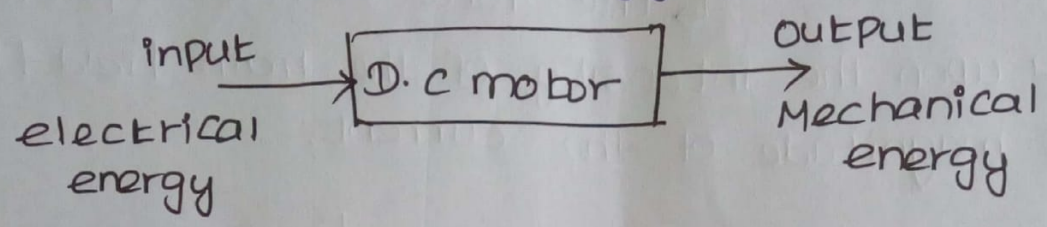

Principle of operation of D.C motor:

↳ "whenever a current carrying conductor is placed in a magnetic field, a mechanical force is produced on the conductor"

↳ The direction of force is given by Flemings Left hand rule.

↳ The magnetic field between two poles N and S is shown in Figure.

magnetic field

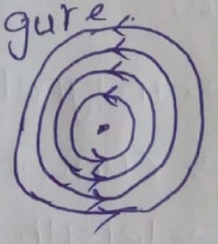

Current carrying conductor

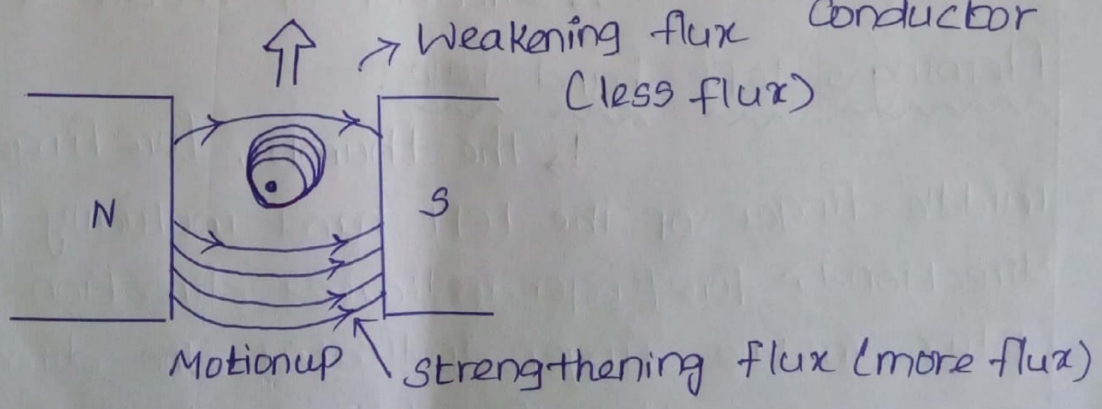

↳ If a current carrying conductor is placed between two magnetic poles as shown in figure.

Scanned by CamScanner

↳ Both the fields will be distorted. Above the conductor the field is weekend (less flux) and below the conductor, the field is strengthened. ∴ the conductor tends to move upwards.

↳ The force exerted upwards depends upon the intensity of the main field flux and the magnitude of the current.

Direction of current through the conductor is reversed ⇒ field below the conductor is less (weekend) above the conductor is more (strengthened)

∴ Then the conductor tends to move downwards

↳ The magnitude of the force experienced by the conductor in a motor is given by,

$$F = BIL \text{ Newtons},$$

where,

B → magnetic field density in Wb/m^2

I → current in amperes

l → length of the conductor in metres

↳ Direction of motion given by FLR

Fleming's left hand rule:

↳ The thumb, fore finger and middle finger of the left hand mutually perpendicular directions, forefinger indicates direction of the field (or) flux, middle finger indicates the direction of current, then the thumb points in the direction of motion of the conductor.

Scanned by CamScanner

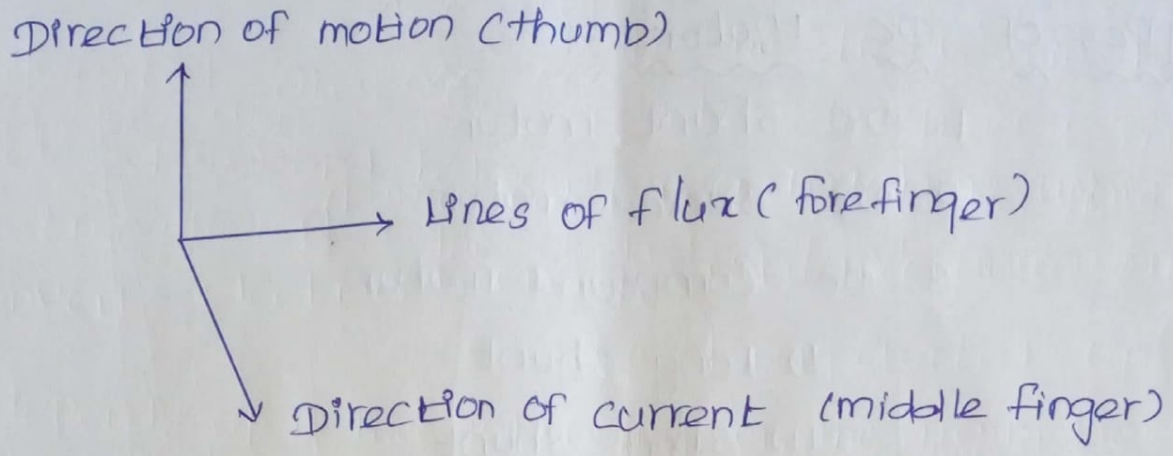

Back E.M.F (or) Counter E.M.F:-

↳ When D.C supply is given to D.C motor its armature starts rotating. The armature rotates and cuts the static magnetic flux produced by the field magnets.

↳ emf induced in the armature conductor (Faraday's law).

↳ As per Lenz's Law this induced emf oppose the supply voltage.

↳ Hence the emf induced in the armature is called back e.m.f (E_b).

$$E_b = \frac{\phi Z N P}{60 A}$$

where,

ϕ → Flux per pole in Webers

Z → No of conductors in the armature

P → No. of poles

A → No. of parallel path

$E_b = V - I_a R_a$ → Voltage drop.

$$I_a = \frac{V - E_b}{R_a}$$

Scanned by CamScanner

Types of DC Motor:-

1. DC shunt motor
2. DC Series motor
3. DC Compound motor
   i) Long Shunt
   ii) Short Shunt

DC Shunt motor:

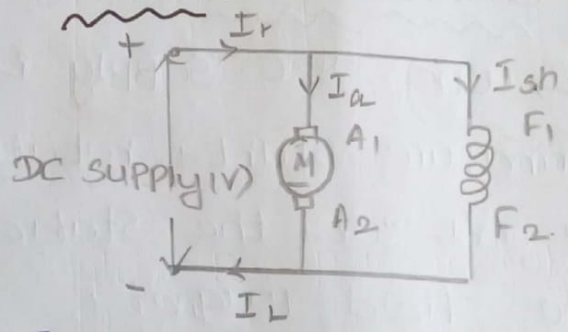

$V = E_b + I_a R_a +$ brush drop

$I_a = I_L - I_{sh}$

$E_b \rightarrow$ back emf of motor

$V \rightarrow$ Applied Voltage

$I_a \rightarrow$ armature current

$R_a \rightarrow$ armature resistance

↳ The field winding is connected in parallel with the armature winding.

DC Series motor:

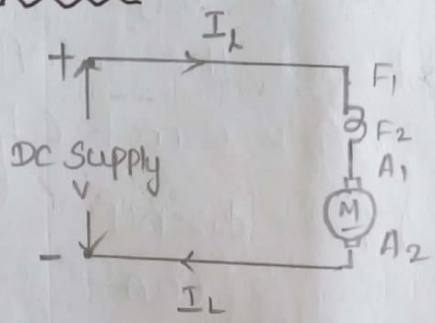

$V = E_b + I_a[R_a + R_{se}]$ + brush drop.

$I_{se} \rightarrow$ Series field current $= I_a$

$R_{se} \rightarrow$ Series field resistance in ohm.

↳ The field winding is connected in series with the armature winding.

DC Compound motor:

↳ In Compound motor both series and shunt field winding are connected with the armature.

Scanned by CamScanner

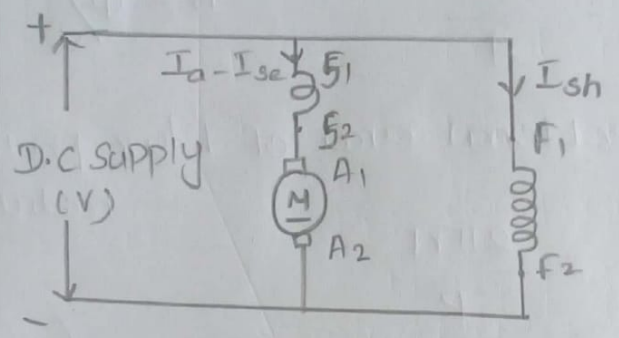

Long shunt DC Compound motor

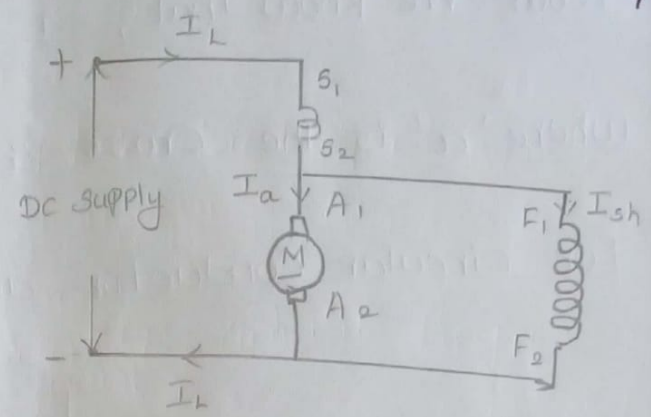

Short Shunt D.C Compound motor

Voltage equation $V = E_b + I_a R_a + I_{se} R_{se} + \text{Brushdrop}$

$I_a R_a$ = Armature resistance drop

$I_{se} R_{se}$ = Series field drop

Long Shunt Compound motor $I_a = I_{se}$

Short Shunt Compound motor $I_{se} = I_L$

Compound motor $I_a = I_L - I_{sh}$

Torque equation of DC motor:

Force on each Conductor $F = BIL$ Newton

Here, $B \rightarrow$ Average flux density (Wb/m^2)

$I \rightarrow$ Current in each Conductor

$L \rightarrow$ length of Conductor (m)

Torque due to one Conductor $= F \times r$ N-m

Total armature torque, $T_a = Z F r$ N-m

$= Z BIL r$

$r \rightarrow$ Radius of armature (m)

$Z \rightarrow$ Total number of armature Conductors

Scanned by CamScanner

Now we know that, $I = \frac{I_a}{A}$ $\quad B = \phi/a$

where 'a' is the cross sectional area of flux path at radius

For circular conductor $a = \frac{2\pi r L}{P}$

$$T_a = Z \times \frac{\phi}{a} \times \frac{I_a}{A} \times L \times r \quad \left(\because B = \frac{\phi}{A}\right)$$

$$= Z \times \frac{\phi}{(2\pi r L/P)} \times \frac{I_a}{A} \times L \times r$$

$$= \frac{Z \phi I_a P}{2\pi A} \text{ NM}$$

$T_a = 0.159 Z \phi I_a (P/A)$ N-M

For a given DC motor, Z, P, A are constant

$T_a \propto \phi I_a \longrightarrow$ For shunt motor

$T_a \propto I_a^2 \longrightarrow$ For series motor

Applications of D.C motor:

1. DC Shunt motor (constant speed)
   - i) Paper mill, drilling machines
   - ii) Reciprocating pump, centrifugal pump
2. DC series motor (variable speed)

(high starting torque, started with load)
   - i) electric trains, cranes
   - ii) Lifts and conveyor
3. Cumulative compound motor (intermittent high starting torque)
   - i) rolling mills, Elevator
   - ii) Printing machines, conveyors

Scanned by CamScanner

AC Machines

Single Phase (1ϕ) induction motor:

Construction:

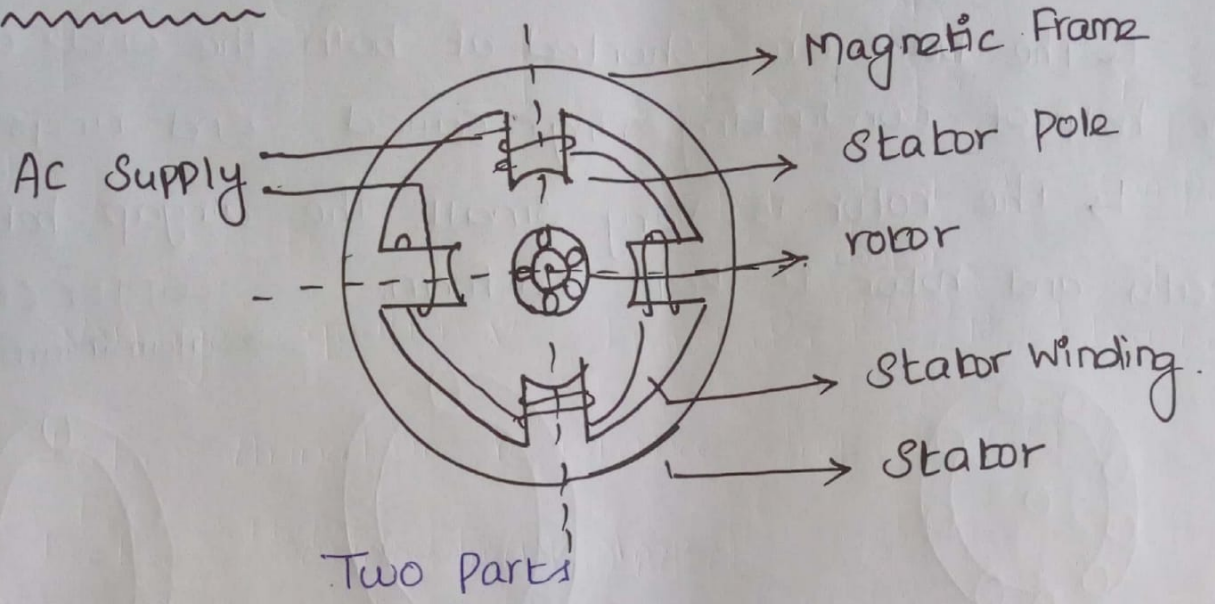

Two Parts
- Stationary Part → Stator (Consist of stator winding)
- rotating Part → Rotor (consists of aluminium bars)

Stator: (outer Part)

- It is made up of stampings.
- Stampings are made up of silicon steel.
- The stampings carry the winding called Stator Winding.
- The stator is excited by a 1ϕ AC supply, now stator produces the magnetic field which create effective flux on the definite number of poles.

Scanned by CamScanner

Rotor:

↳ The Rotor type is squirrel cage.

↳ The rotor consist of copper (or) aluminium bars which is placed in the slots.

↳ The bars are shorted at both the ends with the help of conducting rings called "end rings".

↳ The rotor is very small. The airgap between stator and rotor is kept uniform.

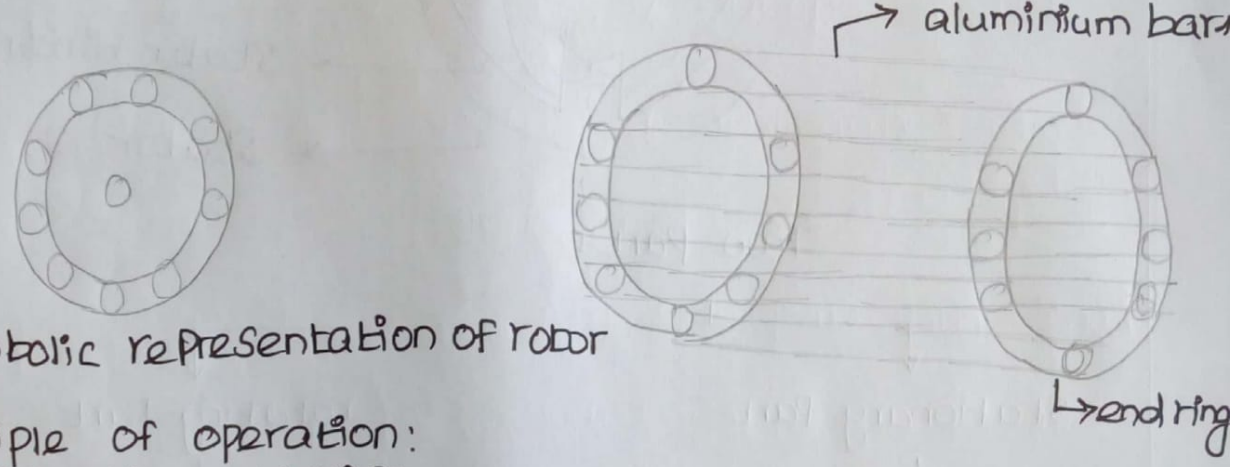

Symbolic representation of rotor

Principle of operation:

↳ It can be explained by using double field revolving theory.

↳ In this theory, the alternating quantity (flux) is represented by two oppositely rotating vectors of half magnitude as shown in fig. (a)

↳ After certain time, the vectors A and B rotates through an angle 'θ' as shown in (b)

↳ In this case,

the resultant flux by c $= 2 \times \frac{\phi_m}{2} \sin\left(\frac{2\theta}{2}\right)$

$= \phi_m \sin\theta$

$\theta = 90^\circ$, The vectors A and B will be oppositely directed in fig (c). The resultant flux will be zero.

Scanned by CamScanner

$\theta = 180^\circ$,

The resultant flux $= -2 \times \frac{\phi_m}{2}$

$= -\phi_m$ (in Fig d)

$\theta = 270^\circ$,

↳ The resultant flux will be zero shown in fig(e).

Thus, Variation of resultant flux with θ can be drawn as shown in fig(2).

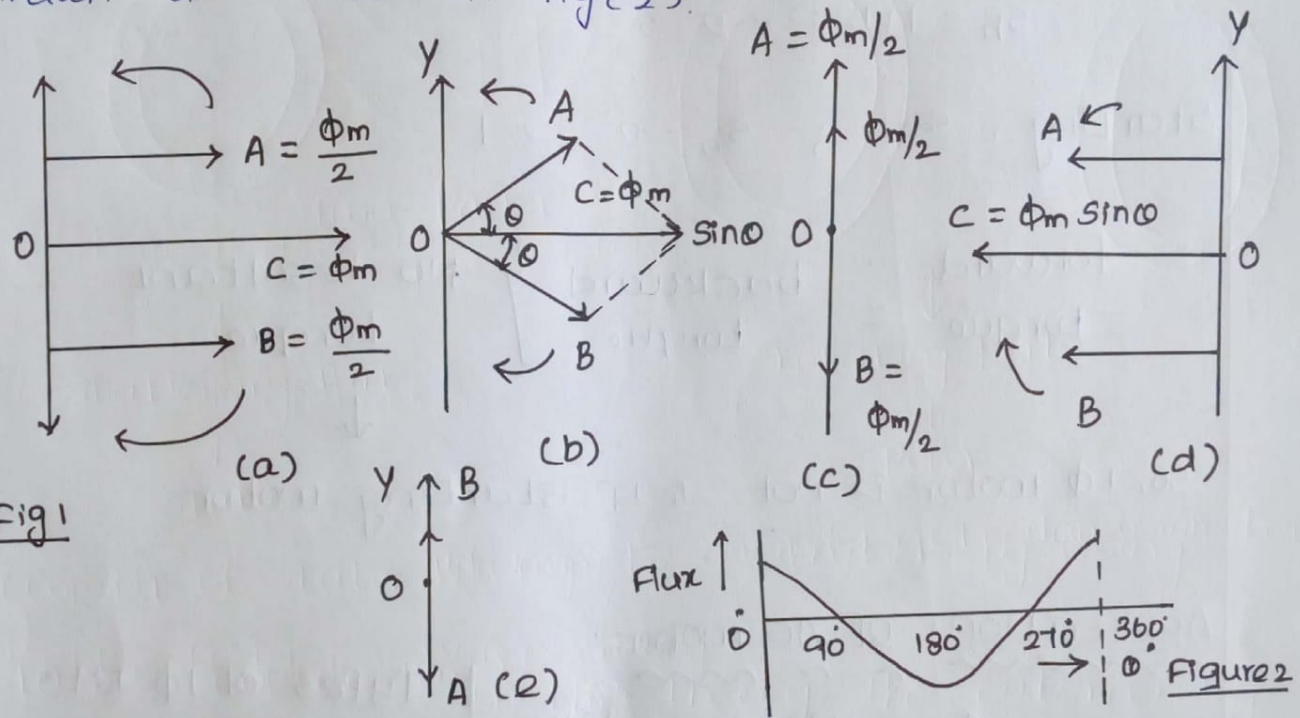

Fig 1

Figure 2

If 's' in the slip of the rotor with respect to forward rotating flux, then the slip of rotor S_b, with respect to back rotating flux will be (2−s).

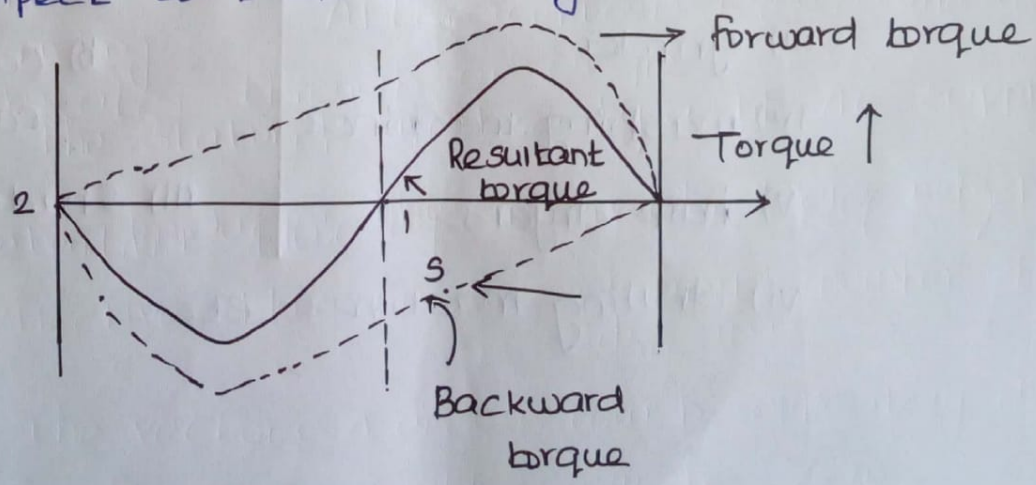

Slip- torque characteristics.

Scanned by CamScanner

forward rotating flux,

$$S = \frac{N_S - N}{N_S} = \frac{N_S}{N_S} - \frac{N}{N_S} = 1 - \frac{N}{N_S} \Rightarrow 1 \frac{N}{N_S} = 1 - S$$

backward rotating flux,

$$S_b = \frac{N_S - (-N)}{N_S} = \frac{N_S + N}{N_S} = \frac{N_S}{N_S} + \frac{N}{N_S} = 1 + \frac{N}{N_S}$$

But $\frac{N}{N_S} = 1 - S$

$$S_b = 1 + 1 - S = 2 - S$$

Starting, $S = 1$; $S_b = 2 - S = 1$

forward torque = backward torque } No resultant torque

↓

So, 1ϕ motor is not self starting motor.

Applications of AC motor:

Domestic uses like,

i) fans
ii) blowers
iii) grinders
iv) washing machines
v) hair dryers
vi) drilling machines etc.

Types of 1ϕ IM:

i) split Phase motor
ii) capacitor motor
  a) capacitor start
  b) capacitor start capacitor run IM
iii) Shaded Pole motor.

Scanned by CamScanner

Single Phase transformer:

Introduction:

No rotating Parts

↳ The transformer is a static device used to transfer electrical energy from one circuit to another circuit without changing the frequency

Working Principle: (Mutual induction)

$\boxed{\text{electromagnetic induction}}$

Construction of transformer:

Primary winding:

↳ The transformer which alternating supply is given is called Primary winding.

Secondary winding

↳ The transformer in which the load is connected (energy is received) is called Secondary winding.

Transformer Core

↳ It magnetically couples the two windings of the transformer.

Laminated Core → Reduce the eddy current Loss

Two types of transformer core

i) Core type

ii) Shell type

iii) Berry type

Scanned by CamScanner

↳ The core of the transformer is either square (or) rectangular in size.

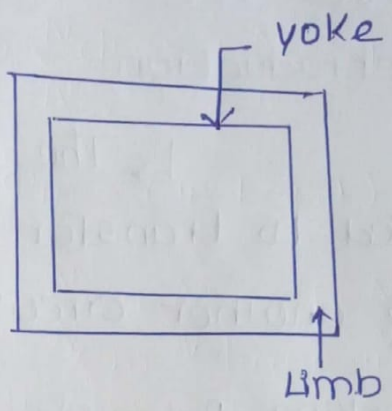

Vertical portion → Limb

horizontal portion → yoke

[top and bottom]

Insulating Medium:

↳ The transformer windings and the metallic container are insulated from one another by a suitable insulating medium.

Container:

↳ It is used for housing the assembled core and windings.

Conservator:

↳ To allow contraction and expansion of oil without exposing it to the outside air.

Breather:

↳ The air coming inside the transformer is passed through the breather for extracting moisture from it.

Scanned by CamScanner

Working Principle:

1. The transformer works on the Principle of electromagnetic induction.

2. The transformer mainly consists of two winding placed on a laminated silicon steel core.

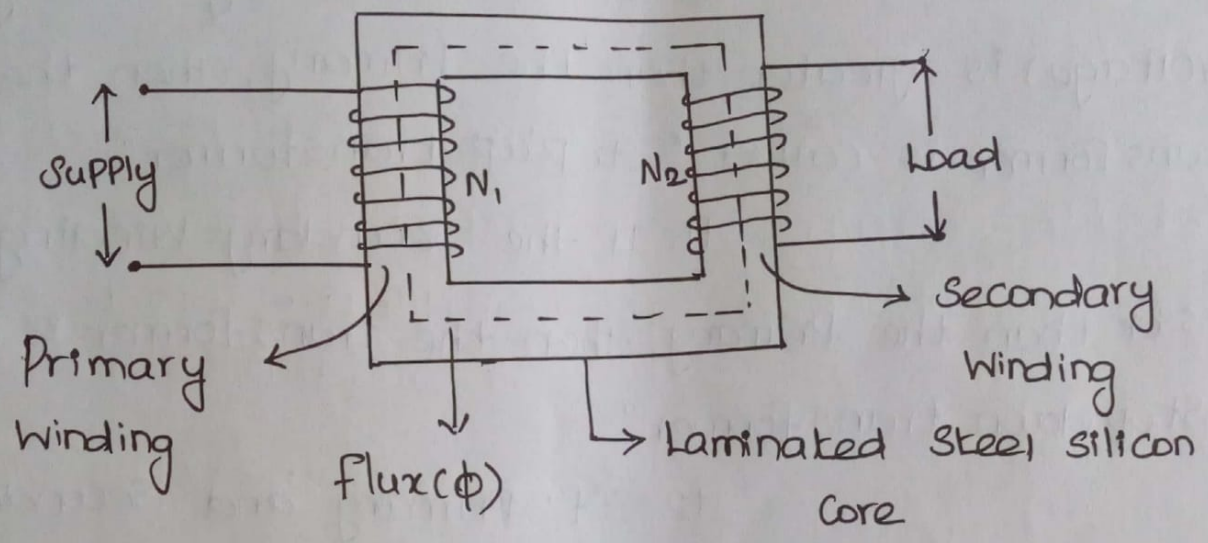

3. The transformer works on the Principle of mutual induction.

4. When A.C supply is given to Primary winding an alternating flux is setup in the core. The alternating flux cuts both the Primary and the Secondary winding.

5. An emf is induced in the Primary winding according to self induction Principle.

6. According to Faraday's mutual induction principle an emf is induced in the Secondary winding.

7. If we connect a Load to the Secondary winding current will through the Load.

Scanned by CamScanner

8. In this way electrical energy is transfered from the Primary circuit to the Secondary circuit.

9. The emf induced in the Windings depends upon the number of turns of the winding.

10. If the Secondary Winding (voltage) is greater than the Primary, then the transformer is called "Step up transformer".

11. If the Secondary Winding is lesser than the Primary, then the transformer is called "Step down transformer".

12. If Primary and Secondary Voltages are equal, then the transformer is said to have a one to one ratio transformer (or) ideal transformer and used to isolate electrical equipments.

EMF equation of a 1ϕ transformer:

$N_1 \rightarrow$ No of turns in Primary

$N_2 \rightarrow$ No of turns in Secondary

$\phi_m \rightarrow$ maximum flux in core (wb)

$\phi_m = B_m \times A$

$f \rightarrow$ frequency of AC input in (Hz)

$E_1 \rightarrow$ R.M.S Value of the Primary induced e.m.f

$E_2 \rightarrow$ R.M.S Value of the Secondary induced emf

Scanned by CamScanner

Average rate of change of flux $= \dfrac{\phi_m}{1/4f}$

$= 4f\phi_m$ wb/sec

$$\text{Form factor} = \frac{\text{RMS Value}}{\text{Average value}} = 1.11$$

RMS Value of the emf/turn $= 1.11 \times 4f\phi_m$

$= 4.44 f\phi_m$ volts

RMS Value of induced emf in Primary Winding,

$$E_1 = 4.44 f N_1 \phi_m$$

RMS Value of induced emf in Secondary Winding,

$$E_2 = 4.44 f N_2 \phi_m$$

$$\frac{E_1}{N_1} = \frac{E_2}{N_2} = 4.44 f\phi_m$$

Applications of transformer:

↳ All electronic circuit use transformer

↳ Power transformer located in Power plants are used to stepup the generated voltage to a high transmission line.

Scanned by CamScanner

UNIT 4

TRANSDUCERS

- Transducer function and requirements- Classification:Active and Passive-Displacement:Capacitive,Inductive,Variableinductance-Linear Variable Differential Transforms(LVDT)
- Electromechanical:Pressure,Flow,Accelerator,Potentiometer etc-Strain Gauge-Chemical:pH probes,Electro galvanic sensor etc-

Electroacoustics:Mic,Speaker,Piezoelectric,Sonar,Ultrasonic,tactile,Geo phones,Hydrophone-Electrooptical:LED,LASER,Photodiode,Photo resistor,Photo transistor-Photoconductive Cell, Photovoltaic cell, Solar cell-infrared emitters-LCD- Optocouplers- thermoelectric: Resistance Temperature-Detectors-Thermocouple-Thermistor-Electrostatic:Electrometer-Electromagnetic:Antenna,Hall effect, Magnetic cartridge etc-Radio acoustics: GeigerMuller Tubes, Radio Receiver-Radio Transmitter.

- The **device** which **converts** the **one form of energy** into **another** is known as the **transducer.**
- Transducers are often employed at the boundaries of automation, measurement, and control systems, where electrical signals are converted to and from other physical quantities.

WHAT IS TRANSDUCER?

- A transducer is a device which transforms non-electrical physical quantity (i.e temperature,sound or light) into an electrical signal(i.e voltage,current,capacity.,)

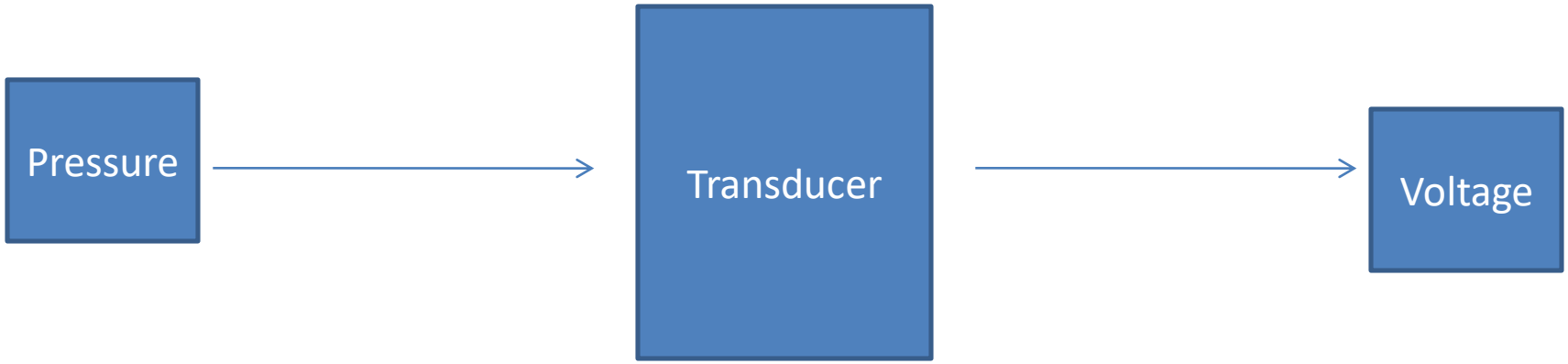

BLOCK DIAGRAM OF TRANSDUCER

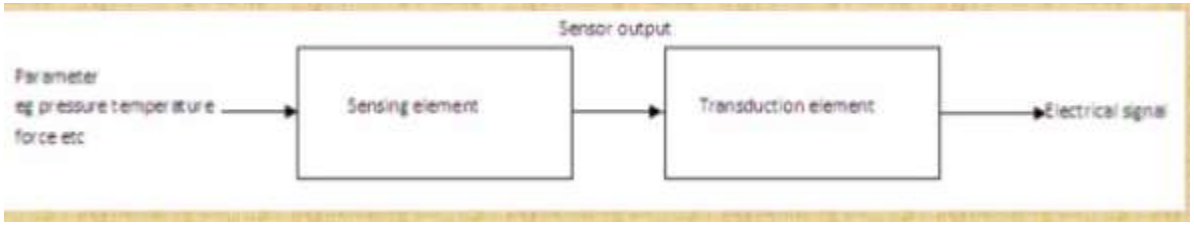

- Transducer contains two parts that are closely related to each other i.e sensing element and transduction element
- The sensing element is also called as sensor.It is device producing measurable response to change in physical condition.
- The transduction element convert the sensor output to suitable electrical form.

TRANSDUCER SELECTION FACTORS

- Sensitivity
- Operation range
- Cross sensitivity
- Errors
- Operating principle
- Transient and frequency response
- Loading effects
- Environmental compatibility
- Insensitivity to unwanted signal

CLASSIFICATION OF TRANSDUCERS

On the basis of transduction form used

- Analog and digital transducers
- Primary and secondary transducers
- Transducers and inverse transducers
- Passive and active transducers

ANALOG AND DIGITAL TRANSDUCERS

- **Analog transducers** converts input signal into output signal, which is a continuous function of time such as THERMISTOR ,strain gauge, LVDT , thermocouple etc.
- **Digital transducers** converts input signal into the output signal in the form of pulses e.g. it gives discrete output. These transducers are becoming more popular nowadays because of advantages associated with digital measuring instruments and also due to the fact that digital signals can be transmitted over a long distance without causing much distortion due to amplitude variation and phase shift.

PRIMARY AND SECONDARY TRANSDUCERS

- When the input signal is directly sensed by the transducers and physical phenomenon is converted into the electrical form directly then such a transducer is called the primary transducer.
- For example: A THERMISTOR used for the measurement of temperature fall I this category. The THERMISTOR senses the temperature directly and causes the change in resistor with the change in temperature.

- When the input signal is sensed first by some detector or sensor and then its output being of some form other than input signal is given as input to a transducer for conversion into electrical from, them such a transducer falls in the category of secondary transducers.
- For example , in case of pressure measurement , bourdon tube is a primary sensor which converts pressure first into displacement, then the displacement is converted into an output voltage by an **LVDT**. In this case LVDT is a secondary transducer.

TRANSDUCERS

- Transducers as already defined , is a device that converts a non electrical quantity into an electrical quantity. Normally a transducer and associated circuit has a non electrical input and an electrical output.
- For example : a thermocouple , photo conductive cell pressure gauge , strain gauge.

INVERSE TRANSDUCERS

- It is a device that converts an elkectrical quantity into a non electrical quantity .it is a precision actuator having an electrical input and a low power non electrical output.
- For example a piezoelectric crystal and translational and angular moving coil elements can be employed as inverse transducers. A most useful application of inverse transducers is in feed back measuring systems.

ACTIVE TRANSDUCER

- Self generating type transducers i.e the transducers which develop their output in the form of electrical voltage or current without any auxiliary source.
- Normally such transducers give very small output, therefore, use of amplifier becomes essential.
- For example TACHO generators used for measurements of angular velocity, thermocouples used for measurement of temperature, piezoelectric crystal used for measurement of force.

PASSIVE TRANSDUCER

- Transducers in which electrical parameters i.e resistance, inductance or capacitance changes with the change in input signal, are called the passive transducers. These transducers require external power source for energy conversion. In such transducers electrical parameters i.e resistance inductance or capacitance causes a change in voltage ,current or frequency of the external power source.
- For example resistive capacitive inductive transducers.

CLASSIFICATION OF TRANSDUCERS

On the basis of transduction form used

- Resistive Transducers
- Capacitive transducers
- Inductive transducers
- Linear variable transducers

RESISTIVE TRANSDUCERS

- The **transducer** whose **resistance varies** because of the **environmental effects** such type of transducer is known as the resistive transducer. The **change in resistance** is **measured** by the **ac or dc measuring devices**. The **resistive transducer** is used for measuring the **physical quantities like temperature, displacement, vibration etc.**

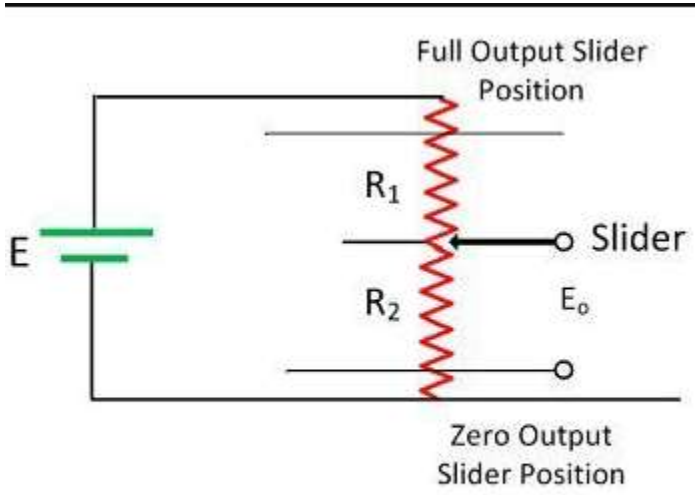

Sliding Resistive Transducer

CAPACITIVE TRANSDUCERS

- The capacitive transducer is used for measuring the displacement, pressure and other physical quantities. It is a passive transducer that means it requires external power for operation. The capacitive transducer works on the principle of variable capacitances.

INDUCTIVE TRANSDUCERS

- Inductive Transducer is the self-generating type otherwise the passive type transducer. The first type like self-generating uses the principle of fundamental electrical generator. The electric generator principle is when a motion among a conductor as well as magnetic field induces a voltage within the conductor. The motion among the conductor and the field can be supplied by transforms in the measured. An inductive transducer (electromechanical) is an electrical device used to convert physical motion into modifying within inductance.

A LINEAR VARIABLE DIFFERENTIAL TRANSFORMER

- A linear variable differential transformer (LVDT) is an absolute measuring device that converts linear displacement into an electrical signal through the principle of mutual induction. Its design and operation are relatively simple, providing extremely high resolution in a device suitable for a wide range of applications and environments.

PRESSURE TRANSDUCER

- A **pressure transducer**, often called a **pressure transmitter**, is a transducer that converts pressure into an analog electrical signal. Although there are various types of pressure transducers, one of the most common is the strain-gage base transducer.

FLOW TRANSDUCERS

- **Flow transducers** are used to measure air and liquid **flow** velocity. **Flow transducers** use different measuring principles. . By means of the **flow** velocity, analysis units of **flow transducers** can calculate the **flow** level or determine the amount of **flow** with a counter. Our **flow transducers** operate based on ultrasound.

ACCELERATION TRANSDUCERS

- strain gage acceleration transducers convert the acceleration of running vehicle or the vibration of car body or machinery into minute voltage to enable accurate measurement of acceleration or vibration with various measuring instruments.

POTENTIOMETER TRANSDUCER

- A **potentiometer** is a resistive-type **transducer** that converts either linear or angular displacement into an output voltage by moving a sliding contact along the surface of a resistive element

STRAIN GAUGE TRANSDUCERS

- **Strain gauge**-type **transducers** electrically convert physical quantities. They operate by converting physical quantities into mechanical stress in a component called a sensing element, and then electrically converting that stress with a **strain gauge**.

Light Emitting Diode

- Light-emitting diodes, or LEDs, are widely used as a standard source of light in electrical equipment.
- It has a wide array of applications ranging from your mobile phone to large advertising billboards. They find applications in devices for showing what the time is and for displaying different types of data.
- In this post, the main focus would be on learning a lot about LEDs, such as its operations and functions.

What is Light Emitting Diode

- A light releasing diode is an electric component that emits light when the electric current flows through it. It is a light source based on semiconductors. When current passes through the LED, the electrons recombine with holes emitting light in the process.
- It is a specific type of diode having similar characteristics as the p-n junction diode. This means that an LED allows the flow of current in its forward direction while it blocks the flow in the reverse direction.

contd

- Light-emitting diodes are built using a weak layer of heavily doped semiconductor material. Based on the semiconductor material used and the amount of doping, an LED will

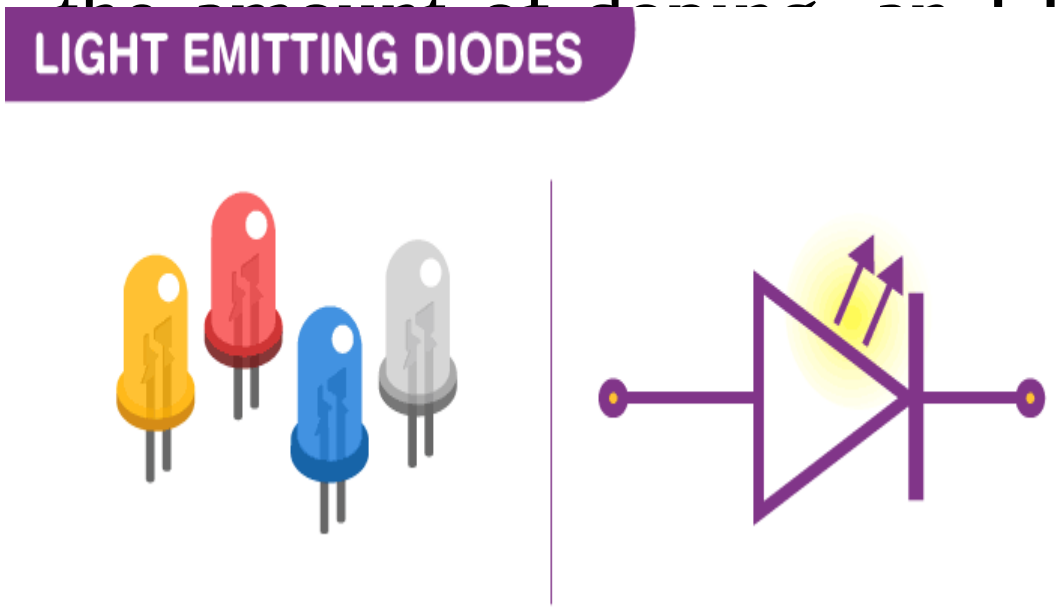

ticular

orward

LED Symbol

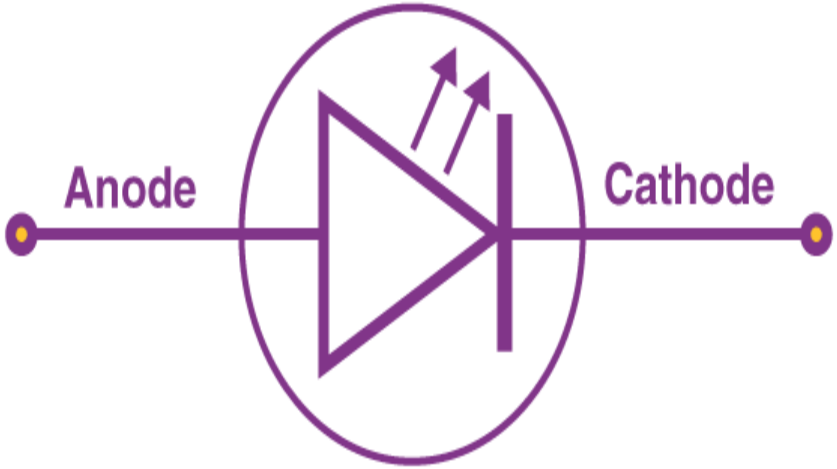

Light Emitting Diode Circuit

- The LEDs also have a specific drop in voltage forward in cases where it is used typical circuits like a conventional diode.
- The drop in voltage depends on the current of the LED, the color of the produced light, etc. There are different values in the drop of voltage that would vary from 1.5V to 2.5 V current for 10 to 50 mA current.

Light Emitting Diode Circuit

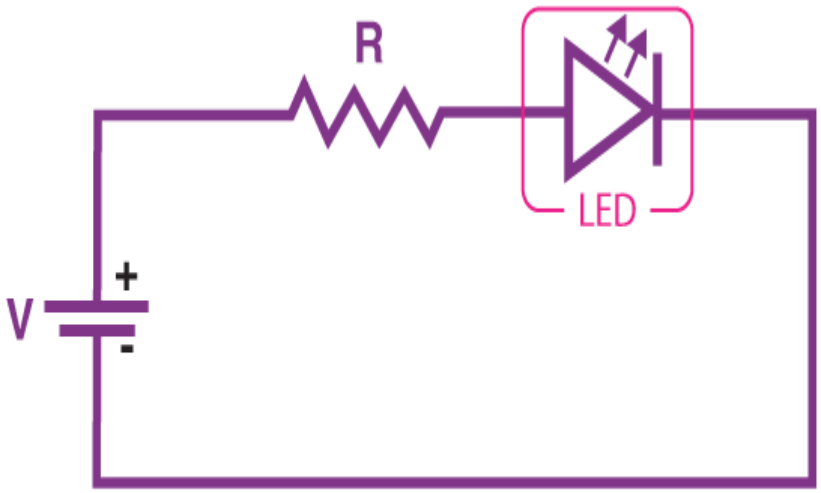

LED Circuit

Working Principle of LED

- The holes lie in the valence band, while the free electrons are in the conduction band. When there is a forward bias in the p-n junction, the electron which is a part of the n-type semiconductor material would overrun the p-n junction and join with the holes in the p-type semiconductor material.
- Therefore, regarding the holes, the free electrons would be at the higher energy bands.

contd

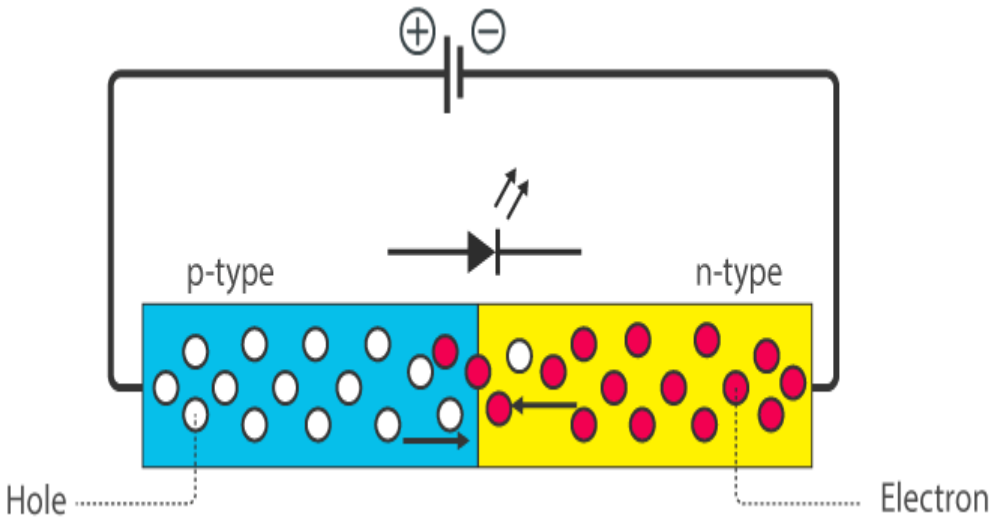

contd

- When this movement of free electron and hole takes place, there is a change in the energy level as the voltage drops from the conduction band to the valance band.
- There is a release of energy due to the motion of the electron. In standard diodes, the release of energy in the manner of heat.
- But in LED the release of energy in the form of photons would emit light energy. The entire process is known as electroluminescence, and the diodes are known as a light-emitting diode.

In LED, energy discharged in light form hinges on the forbidden energy gap. One could manipulate the wavelength of the light produced. Therefore, from its wavelength, the light color and its visibility or cannot be controlled. The color and wavelength of the light emitted can be determined by doping it with several impurities.

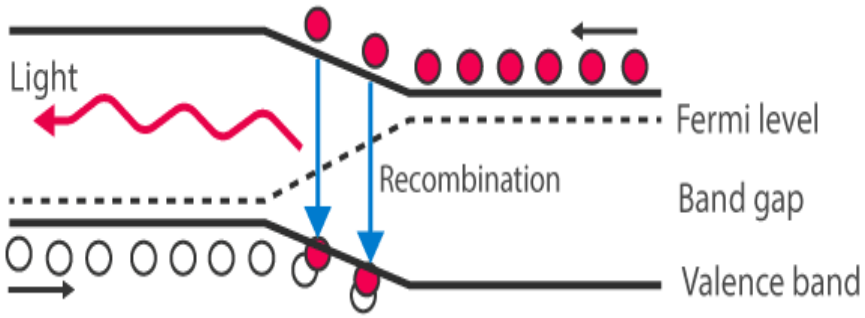

Uses of LED

- LEDs find applications in various fields, including optical communication, alarm and security systems, remote-controlled operations, robotics, etc. It finds usage in many such areas because of its long-lasting capability, low power requirements, swift response time, and fast switching capabilities. Below are a few standards
- LED uses:
  - Used for TV back-lighting
  - Uses in displays
  - Used in automotive
  - LEDs used in the dimming of lights

Types of LED

Below is the list of different types of LED that are designed using semiconductors:

- Miniature LEDs
- High-Power LEDs
- Flash LED
- Bi and Tri-Colour LEDs
- Red Green Blue LEDs
- Alphanumeric LED
- Lighting LED

Applications of LEDs

- Electronic displays such as OLEDs, micro-LEDs, quantum dots etc.
- As an LED indicator.
- In remote controls.
- Lightings.
- Opto-isolators.

LASERS

History of the LASER

• Invented in 1958 by Charles Townes (Nobel prize
in Physics 1964) and Arthur Schawlow of Bell Laboratori

• Was based on Einstein's idea of the "particlewave
duality" of light, more than 30 years earlier

• Originally called MASER (m = "microwave")

What is Laser?

Light Amplification by Stimulated Emission of Radiation

- A device produces a coherent beam of optical radiation by stimulating electronic, ionic, or molecular transitions to higher energy levels
- When they return to lower energy levels by stimulated emission, they emit energy.

Properties of Laser

- The light emitted from a laser is **monochromatic**, that is, it is of one color/wavelength. In contrast, ordinary white light is a combination of many colors (or wavelengths) of light.

- Lasers emit light that is highly **directional**, that is, laser light is emitted as a relatively narrow beam in a specific direction. Ordinary light, such as from a light bulb, is emitted in many directions away from the source.

- The light from a laser is said to be **coherent**, which means that the wavelengths of the laser light are in phase in space and time. Ordinary light can be a mixture of many wavelengths.

These three properties of laser light are what can make it more hazardous than ordinary light. Laser light can deposit a lot of energy within a small

Monochromacity

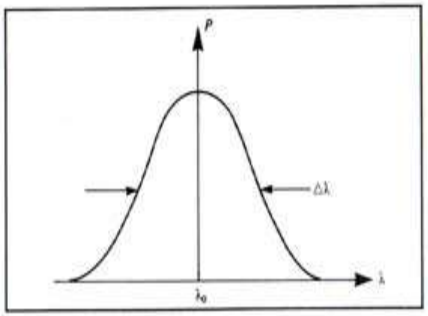

Nearly monochromatic light

Example:

He-Ne Laser

$\lambda 0 = 632.5$ nm

$\Delta\lambda = 0.2$ nm

Diode Laser

$\lambda 0 = 900$ nm

$\Delta\lambda = 10$ nm

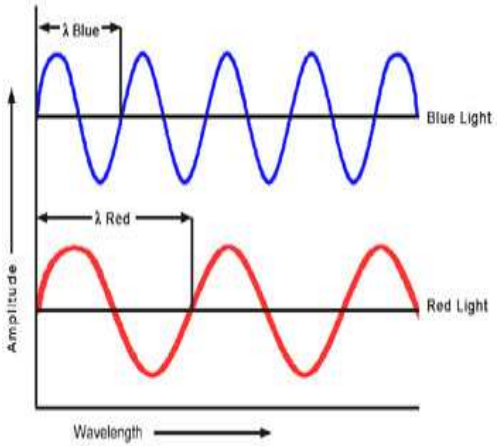

Comparison of the wavelengths of red and blue light

Directionality

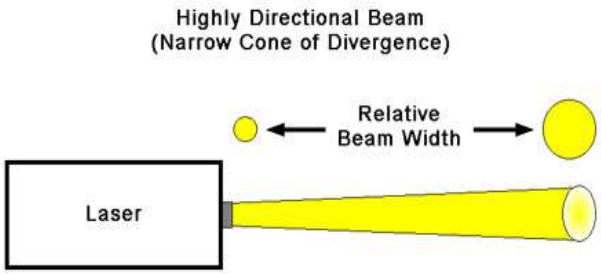

Conventional light source Divergence angle (θ_d)

Beam divergence: $\theta_d = \beta \lambda / D$

$\beta \sim 1$ = f(type of light amplitude distribution, definition of beam diameter)

λ = wavelength

D = beam diameter

Coherence

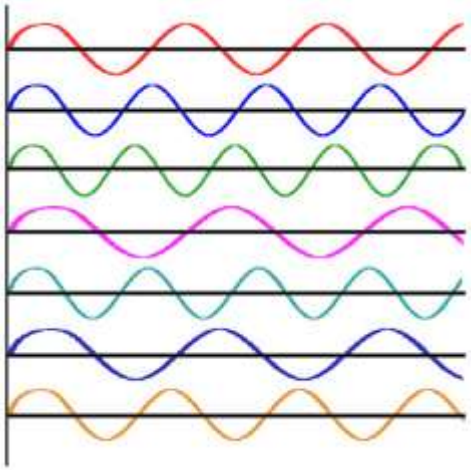

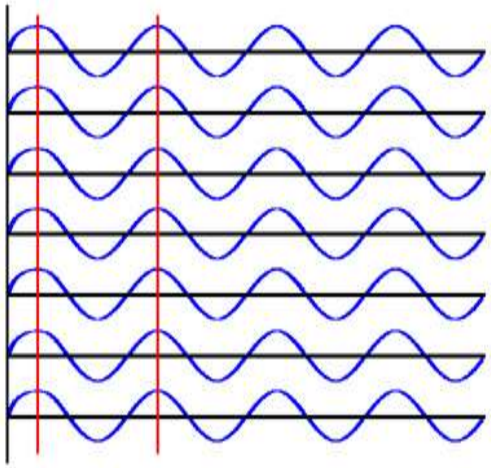

Incoherent light waves

Coherent light waves

Incandescent vs. Laser Light

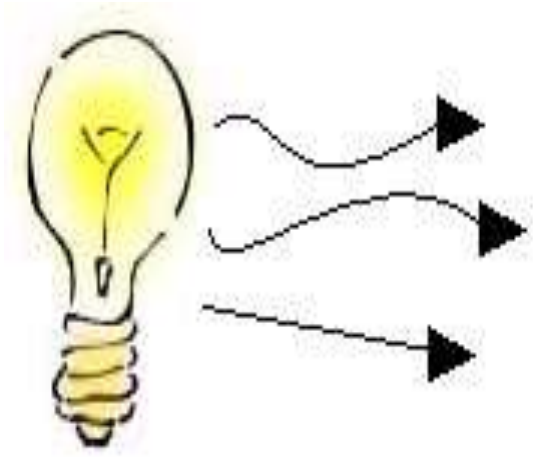

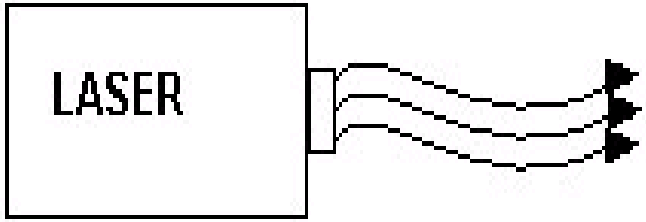

1. Many wavelengths
2. Multidirectional
3. Incoherent

1. Monochromatic
2. Directional
3. Coherent

Basic concepts for a laser

- Absorption
- Spontaneous Emission
- Stimulated Emission
- Population inversion

Absorption

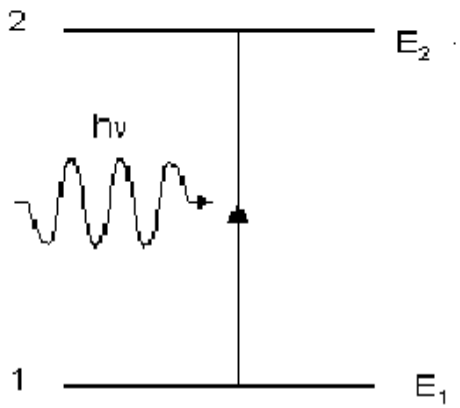

- Energy is absorbed by an atom, the electrons are excited into vacant energy shells.

Spontaneous Emission

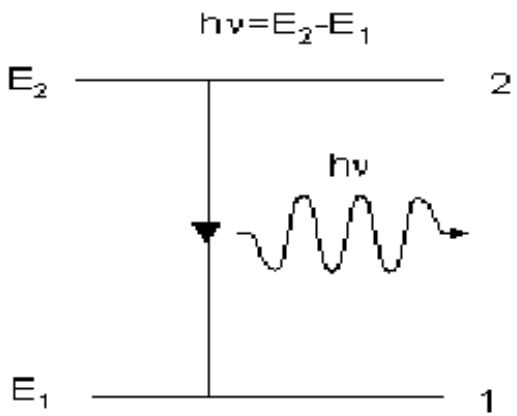

- The atom decays from level 2 to level 1 through the emission of a photon with the energy *hν*. It is a completely random process.

Stimulated Emission

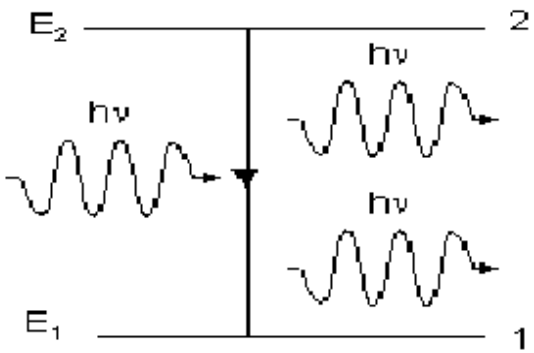

atoms in an upper energy level can be triggered or stimulated in phase by an incoming photon of a specific energy.

Stimulated Emission

The stimulated photons have unique properties:

- In phase with the incident photon
- Same wavelength as the incident photon
- Travel in same direction as incident photon

Population Inversion

- A state in which a substance has been energized, or excited to specific energy levels.
- More atoms or molecules are in a higher excited state.
- The process of producing a population inversion is called pumping.
- Examples:

→by lamps of appropriate intensity

→by electrical discharge

UNIT IV.

SEMICONDUCTOR DEVICES.

BASIC CONCEPT OF SEMICONDUCTORS:

The solid materials are classified into three types depending on the current carrying capability. They are the conductors, insulators and semiconductors.

CONDUCTORS:

The conductors have large number of free electrons which act as a charge carriers. So, they have high conductivity.

INSULATORS:

They have only few free electrons so, the conductivity is low.

SEMICONDUCTORS:

The semiconductor material has the conductivity between conductors and insulators. These are neither smart conductors nor smart insulators. They have

Scanned by CamScanner

only few free electrons because their atoms are tightly bonded in an exceedingly crystalline form are referred to as a crystal lattice. Some of widely used semiconductor material is silicon and germanium.

ENERGY LEVELS :

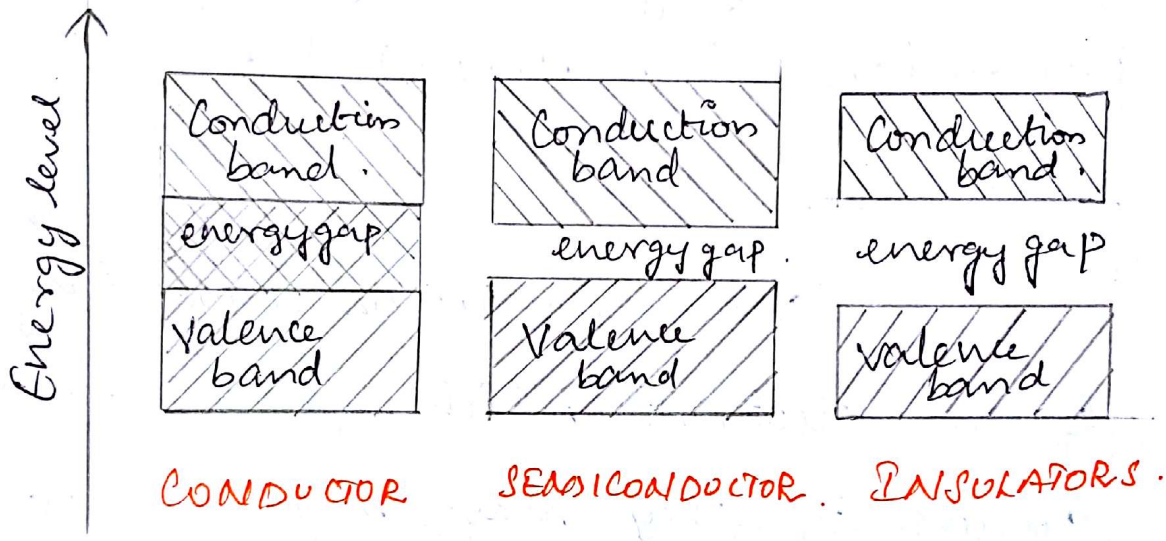

(a) Energy band diagrams.

From the above diagram, the conductors have forbidden energy gap as zero. The conduction band and the valence band overlap eachother. The large number of valence electrons are available for conduction in room temperature.

Scanned by CamScanner

In insulators, the forbidden energy gap is very high [$E_g \approx 4-8$ eV]. They have very few valence electrons for conduction. So, conductivity is low.

SEMICONDUCTOR:

In pure semiconductor, the energy gap lies in the range of 0.1-3 eV. By increasing the temperature more electron hole pairs could be created so conductivity gets increased and the resistivity gets decreased.

CLASSIFICATION OF SEMICONDUCTORS:

There are two types of semiconductors. They are
* intrinsic semiconductors.
* Extrinsic semiconductors

INTRINSIC SEMICONDUCTOR:

A pure semiconductor is called intrinsic semiconductor. Silicon crystal in its pure form is the example of intrinsic semiconductor because all the atoms in the crystal are silicon atoms. The room temperature

Scanned by CamScanner

is sufficient to make a valence electron to move away from the covalent bond. So, the covalent bond is broken. This broken electron become a free electron to move in the crystal lattice. When an electron breaks a covalent bond and moves away, a vacancy is created in the broken covalent bond. This vacancy is called a 'Hole'. A hole is a positive charge. Whenever a free electron is generated, a hole is created.

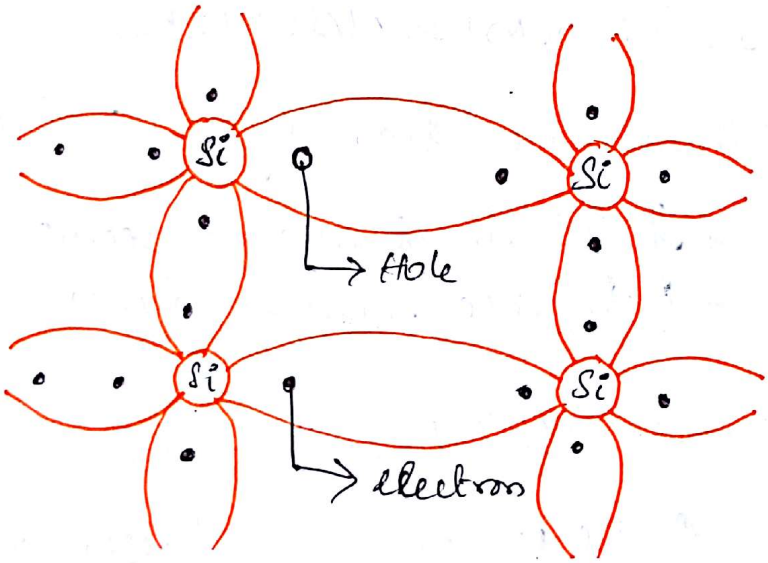

EXTRINSIC SEMICONDUCTOR:

The intrinsic semiconductor are used only in the manufacture of heat and light sensitive resistance. Practically,

Scanned by CamScanner

the intrinsic semiconductors material is added with certain specified type of impurities. This process of adding impurities to the semiconductor material is called dopping. Doping is done after the semiconductor material has been refined to a high degree of purity. A doped intrinsic semiconductor is called Extrinsic semiconductor. This extrinsic semiconductor are used for the fabrication of any kind of electronic devices. There are two forms of extrinsic semiconductors. They are.

* N-type Semiconductor
* P-type semiconductor.

N TYPE SEMICONDUCTOR:

The n-type semiconductor material is dopped with pentavalent impurity (ie) it is dopped to have excess electrons. The material used for dopping are Arsenic, Antimony or phosphorus. The impurities are added at very low level with silicon or germanium. In N-type semiconductor, the free electrons are the majority charge

Scanned by CamScanner

carriers and the holes are the minority charge carriers.

P-TYPE SEMICONDUCTOR:-

A small amount of trivalent impurities is added to obtain more holes. The semiconductor material added as impurity are aluminium, Boron or Gallium. The impurity atom that accept the electrons from Valence band creating holes are called acceptor atoms. The holes are the majority charge carriers and the electrons are the minority carriers.

PN JUNCTION DIODE:

A PN junction is formed by combining P and N type materials. A piece of P type material is kept upon the N type material, the surface where P type & N type material meet is called PN Junction.

At the junction, the free electrons in the N region diffuses across the junction in to the P region. The holes in the P region diffuses across the junction in to the N region

Scanned by CamScanner

This process of movement of electrons and holes is called diffusion. According to this the electrons and holes recombine with eachother to form a region at the junction. It is called depletion region. When the free electrons move from N type to P type, the donor ions become positively charged. Similarly when the holes move from P type to N type, the acceptor ions become negatively charged. These two charges, on either sides, make a potential across the depletion region is called barrier potential.

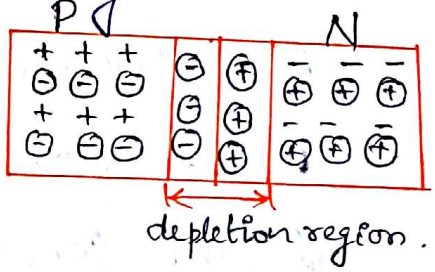

DRIFT AND DIFFUSION CURRENT:

The net current flowing through the PN junction diode contains two components. They are
* drift current
* diffusion current.

DRIFT CURRENT:-

When an electric field is applied across the semiconductor material,

Scanned by CamScanner

the charge carriers attains some energy, and the holes moves towards the negative terminal and the electrons moves towards the positive terminal of the battery. So, due to this effect of movement of charge carriers constitutes a current known as drift current.

DIFFUSION CURRENT:

When no electric field is applied, the charge carriers have the tendency to move from higher concentration region to lower concentration region. Now, the movement of charge carriers produces a current known as diffusion current.

WORKING:

The conduction of any diodes, depends on their biasing. There are two types of biasing
* Forward biasing.
* Reverse biasing.

Scanned by CamScanner

FORWARD BIASING:

In forward biasing, the positive terminal of the battery is connected to the P-type and the negative terminal of the battery is connected to the N type material of the diode.

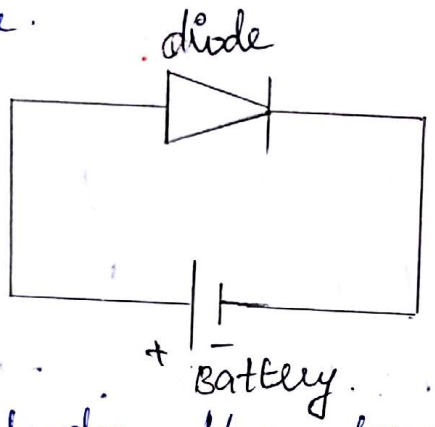

Under the forward bias condition the applied positive potential repels the holes in P type region. The negative potential repels the electrons in N type region. Now the electrons in N type region and the holes in the p type region move towards the junction. This reduces the width of the depletion region and also the barrier potential.

If the applied potential is greater than barrier potential, the majority carriers on both regions move towards the junction. It makes the current flow through the

Scanned by CamScanner

junction. The amount of current flow depends upon the magnitude of applied potential.

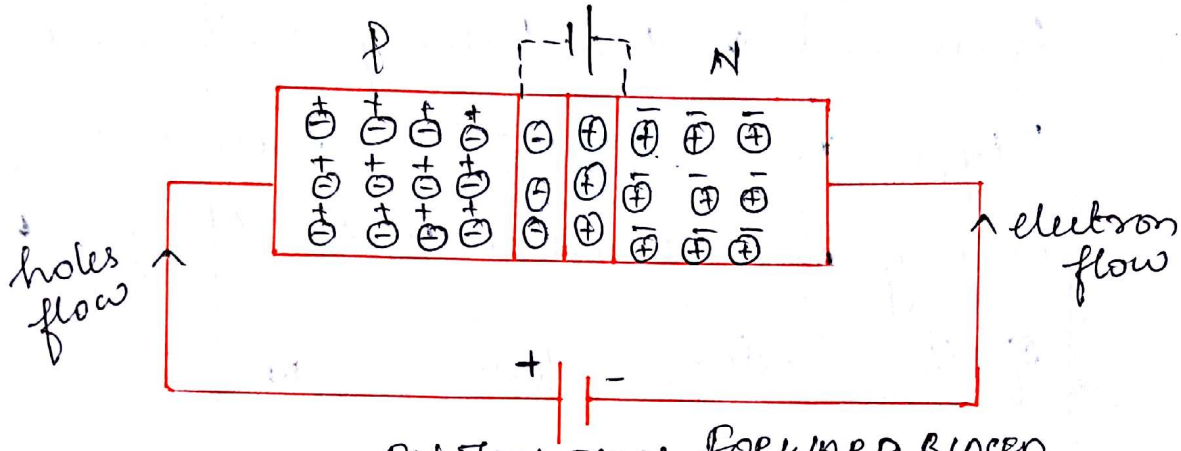

PN JUNCTION FORWARD BIASED.

When the applied potential is less than cut in or threshold voltage, the current flow is very low. The cut-in voltage is generally 0.3V for Germanium and 0.7V for silicon diodes respectively. At the cut in voltage, the applied potential overcomes the barrier potential, increases the current rapidly.

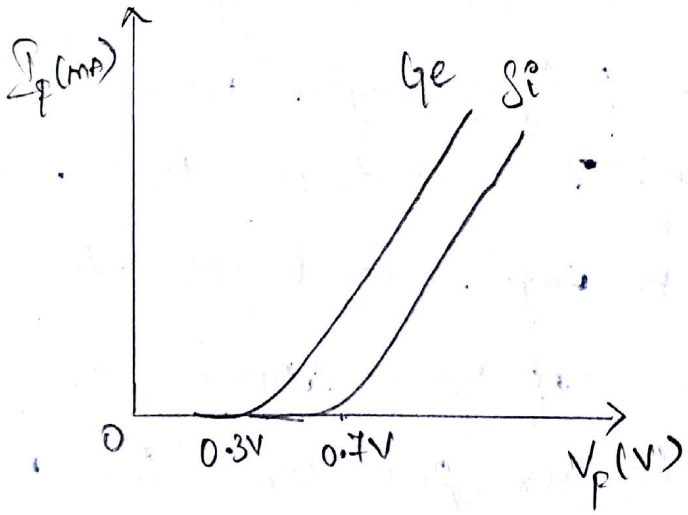

VI CHARACTERISTICS.

Scanned by CamScanner

REVERSE BIASING:

In reverse biasing, the positive terminal of the battery is connected to the N type and the negative terminal of the battery is connected to the P-type material of the diode.

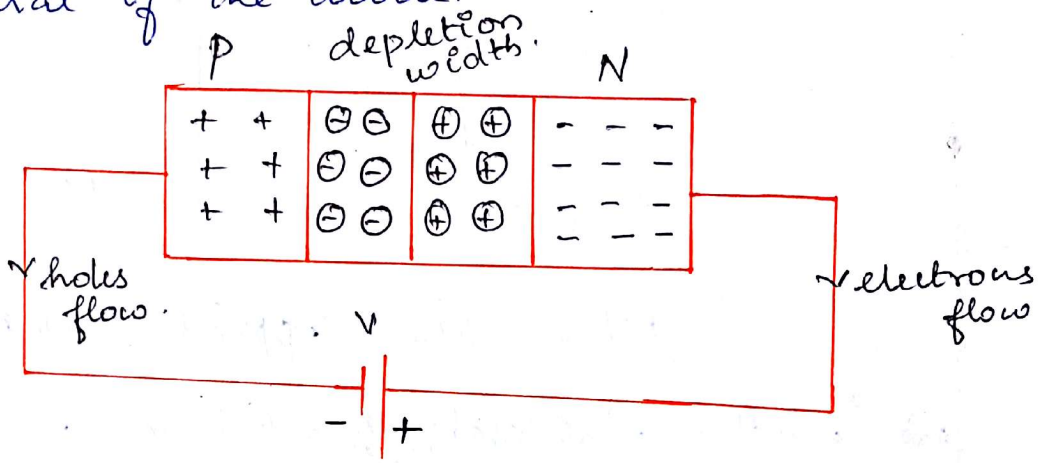

Under reverse bias condition, the majority carriers with P and N regions are moved towards the battery respectively. The holes in P type and the electrons in N type regions move to the negative and positive terminals of the battery respectively. Hence the ~~depth~~ width of the depletion region is increased, which prevents the flow of majority carriers through the junction.

When the applied voltage is slowly increased, the majority carriers [electrons]

Scanned by CamScanner

in P region and the minority carriers [holes] in N region make a small amount of current flow through the junction. This current is called "reverse saturation current".

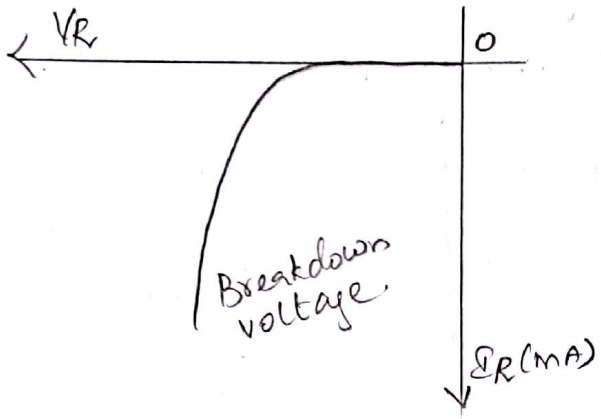

When the applied reverse voltage is further increased, breakdown occurs in the junction. Now large reverse current flow through the junction. The minimum voltage that needs to breakdown occurs in the junction is called "breakdown voltage".

The diode is an unidirectional device. The diode generally permits the current in only one direction. Hence, it is used in rectifiers, clippers, clampers, etc.

DIODE APPLICATIONS:

* Rectifiers in power supplies.
* Switch in digital logic circuit.

Scanned by CamScanner

* Clamping networks used as DC restorer in TV receivers and voltage multipliers.

ZENER DIODE:

A zener diode is also called as voltage reference, voltage regulator or breakdown diode.

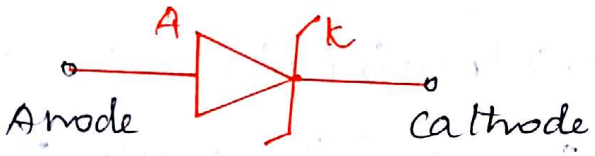

(a) Symbol

The zener diode is a silicon based PN junction device. and it is operated in the reverse breakdown region. The breakdown voltage is adjusted by controlling the doping level.

REVERSE CHARACTERISTICS:

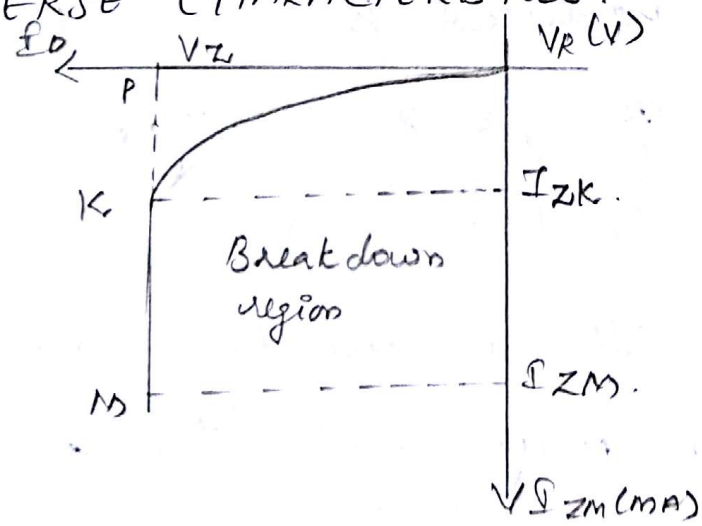

Scanned by CamScanner

From the reverse characteristics of the zener diode it is noted that the reverse voltage (V_R) is increased, the reverse current (I_Z) or zener current remains negligibly small upto the knee point. (P). At the knee point p, the breakdown occurs. & the zener breakdown voltage V_Z is maintained constant. This is the regulating ability of the zener diode. It maintains an essentially a constant voltage across its terminals over a specified range of zener current.

There is a minimum value of zener current called breakover current ($I_Z(min)$) which must be maintained to keep the diode in breakdown region. When the current is reduced below the knee point the voltage changes drastically.

DIODE BREAKDOWN:

The reverse breakdown of a zener diode may occur either due to

Scanned by CamScanner

Zener breakdown or Avalanche breakdown.

ZENER BREAKDOWN:

Zener breakdown takes place, when both sides of the junctions are very heavily doped and consequently the depletion layer is thin. When a small reverse bias voltage is applied, a very strong electric field is set up across the thin depletion layer. This electric field is enough to break the covalent bonds. Now extremely large number of free charge carriers are produced which constitute the zener current. This process is called zener breakdown. In this process the junction is not damaged. The junction regains its original position when the reverse voltage is removed.

AVALANCHE BREAKDOWN :-

The avalanche breakdown occurs at lightly doped junctions, the width of the depletion layer is large. When the reverse bias voltage is increased, the accelerated free electrons collide with the

Scanned by CamScanner

immobile ions in the depletion region. Due to collision covalent bonds are broken and electron hole pairs are generated. These new carriers again acquire sufficient energy and collide with other ions, thereby generating further electron-hole pairs. This process is cumulative in nature and results in generation of an avalanche charge carriers in a short time. This breakdown occurs at higher reverse voltage levels.

APPLICATIONS OF ZENER DIODE:

* It can be used as a voltage regulator.
* It can be used as a limiter in wave shaping circuits.
* It can be used as a fixed reference voltage in transistor biasing circuits
* It is used for meter protection against damage from accidental over voltage.
* It can be used as a fixed reference voltage in a network for calibrating voltmeters.

Scanned by CamScanner

RECTIFIER:

Rectifier is an electronic device which convert AC voltage into unidirectional DC voltage. For this, rectifier uses an unidirectional conducting devices such as PN junction diode or vacuum diode.

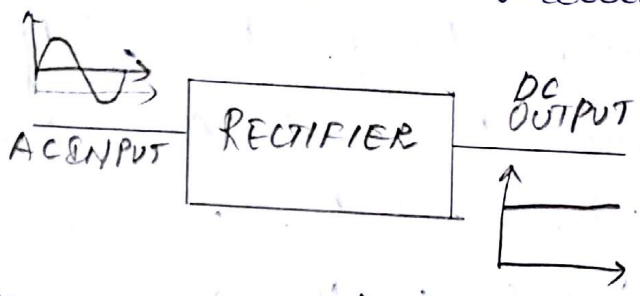

CLASSIFICATION OF RECTIFIERS:

Based on the period of conduction and construction, Rectifiers are classified into the following types.

* Half wave Rectifier
* Full wave Rectifier
* Bridge Rectifier.

HALF WAVE RECTIFIER:

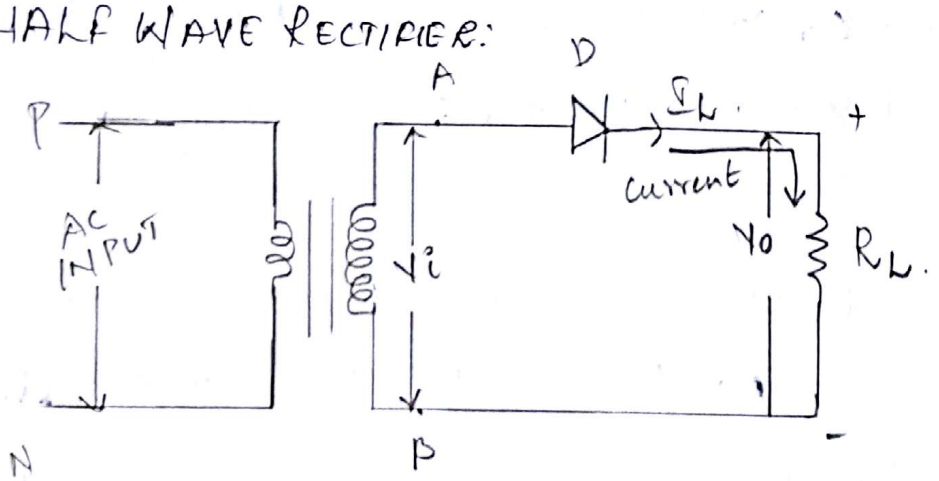

Scanned by CamScanner

This rectifier converts an AC input voltage into pulsating voltage for only one half cycle of the applied voltage. The circuit contains one diode. So, the output is obtained only for positive half cycle of the input voltage.

During the positive half cycles of the input signal, terminal A is positive with respect to terminal B. Now diode D is forward biased. So, the current flows from from terminal A to B through diode D and load resistance R_L. The input voltage is fully dropped across the load resistance R_L.

During the negative half cycles of the input signal, terminal B is positive with respect to terminal A. Now diode is reverse biased. So, no current flows through the diode and load resistance. The output voltage is zero.

In this circuit, the output contains only the positive half cycle of the input signal. So, it is called as the half wave

Scanned by CamScanner

rectifier.

When an AC voltage is applied to the input of the rectifier, current flows through the load resistance (R_L) only in one direction. Therefore the output across R_L will be DC output voltage. The output is not a steady DC but only a pulsating D.C. It is used for small power applications.

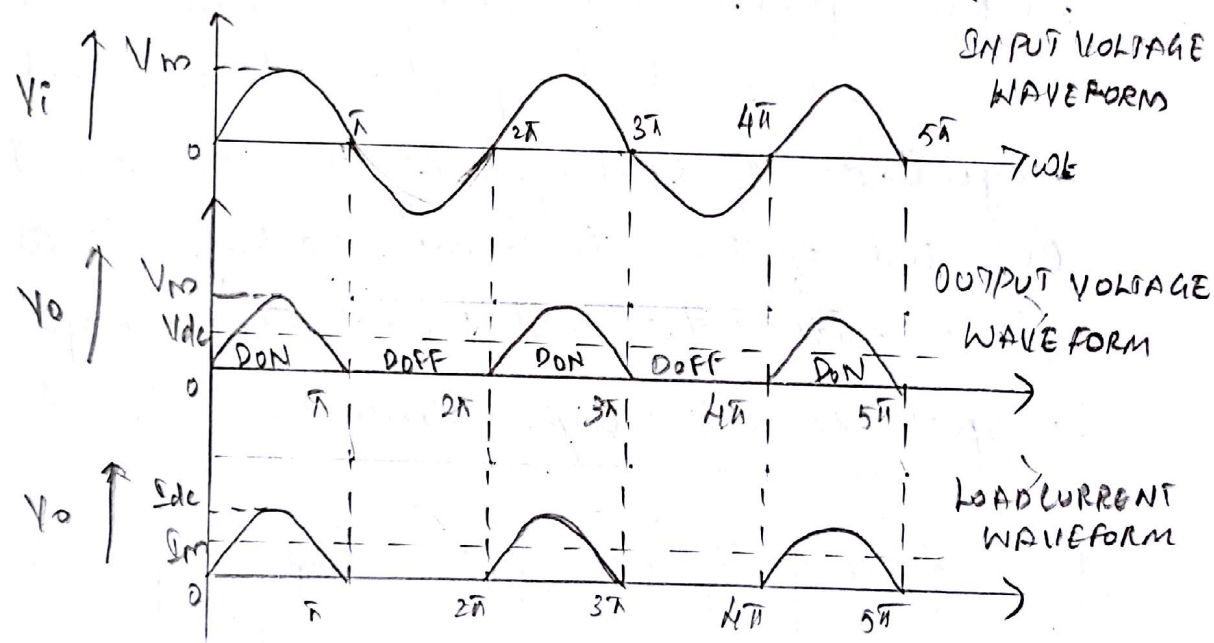

ADVATAGES:

* Circuit is very simple and occupies less space
* Less cost

FEATURES:

* Output voltage ($V_{dc} = 0.318\ V_m$)
* Rectification efficiency is low .40.6% only

Scanned by CamScanner

* Ripple factor is high - 1.21.
* DC saturation of transformer core results in hysteresis loss and production of harmonics, in the power supply.
* Suitable only for very low power applications
* Peak inverse voltage should be equal to V_m

FULLWAVE RECTIFIER:

The full wave rectifier contains two diodes, so they conduct for full cycle of the input signal. This rectifier uses centre tap transformer, which produces two equal magnitude of voltages at the opposite terminal. One end of the terminal voltage is out of phase with other end terminal voltage with respect to centre tap terminal.

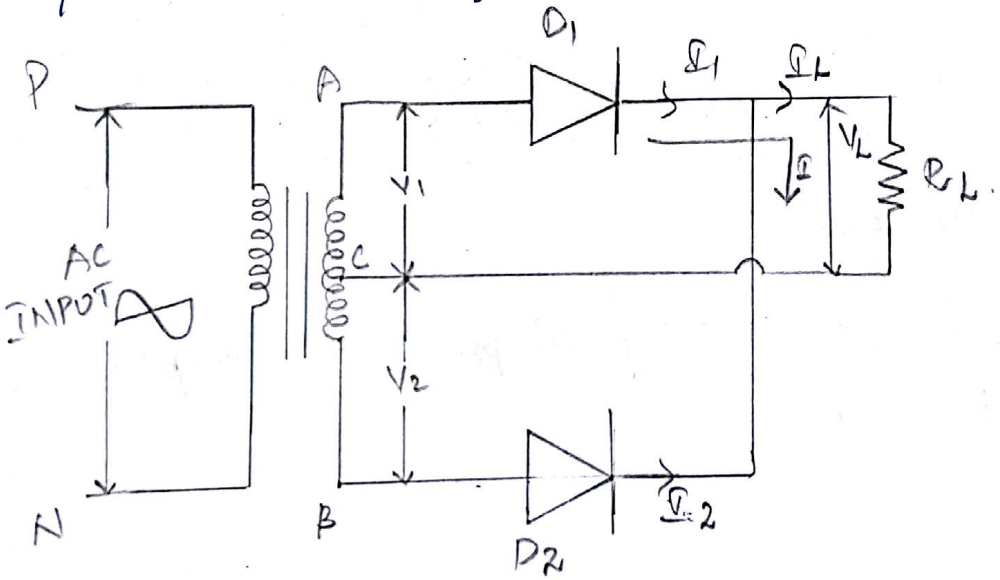

Scanned by CamScanner

During the positive half cycle of the input voltage, terminal A is positive, and B is negative with respect to terminal C. Now, the diode D_1 conducts in forward bias and diode D_2 is reverse bias. So, the current I_1 flows from the terminal A to the load through diode D_1. No current flows through diode D_2.

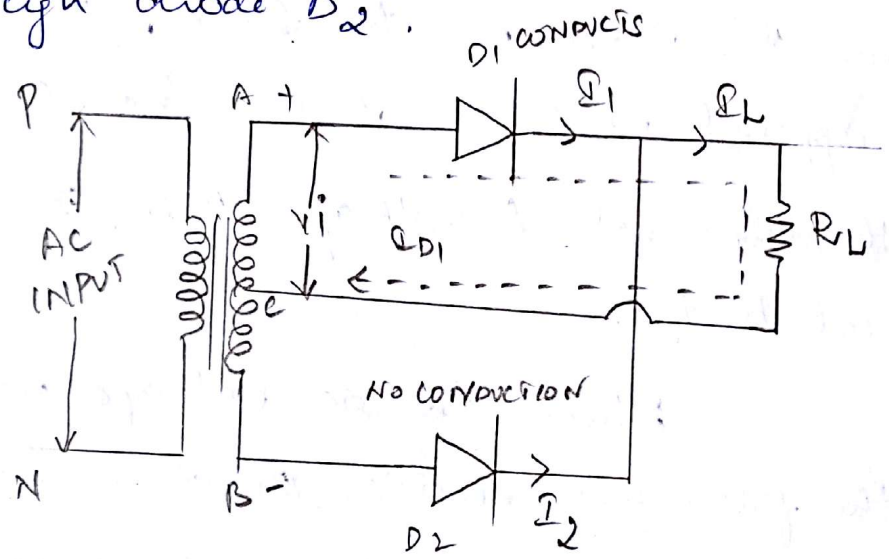

During the negative half cycle of the input voltage, terminal B is positive and A is negative with respect to terminal C. Now, the diode D_2 is forward biased and the diode D_1 is reverse biased. So, the current I_2 flows from terminal B to the load through diode D_2.

Scanned by CamScanner

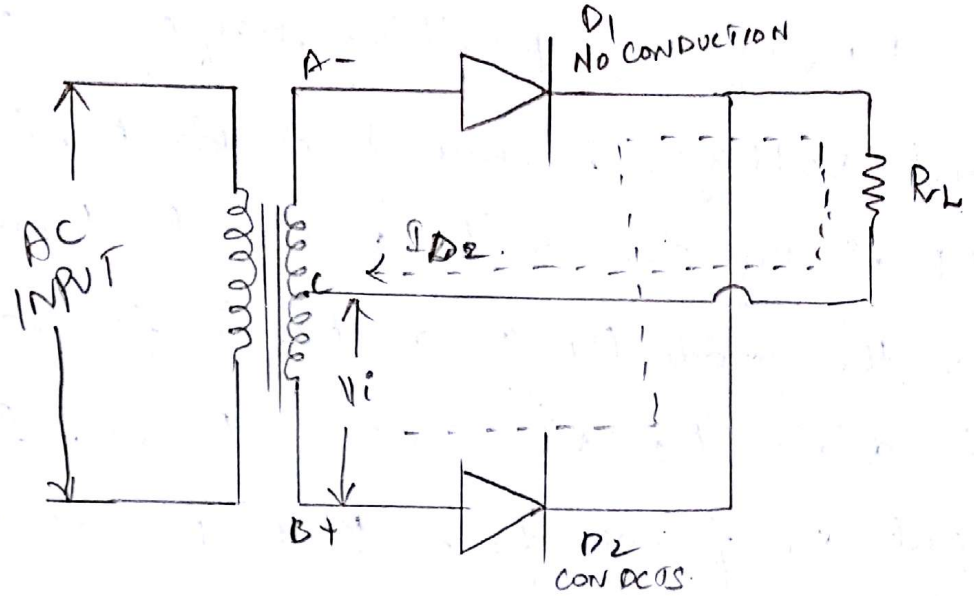

The currents I_1 & I_2 follows the same direction in the load. If the magnitude of applied voltage at terminal A is equal to the terminal B voltage, then current I_1 is equal to I_2.

When an AC voltage is applied to the full wave rectifier D_1 conducts in positive half cycle & D_2 conducts in the negative half cycle. and current flows in same direction in R_L. A pulsating DC is developed across the load resistor R_L.

FEATURES:

* High output voltage, than half wave rectifier
  $V_{dc} = 0.637 V_m$
* Rectification efficiency is high - 81.2 %.
* Ripple factor is low - 0.421.

Scanned by CamScanner

* DC saturation of the core is avoided.
* Peak inverse voltage should be equal to $2V_m$

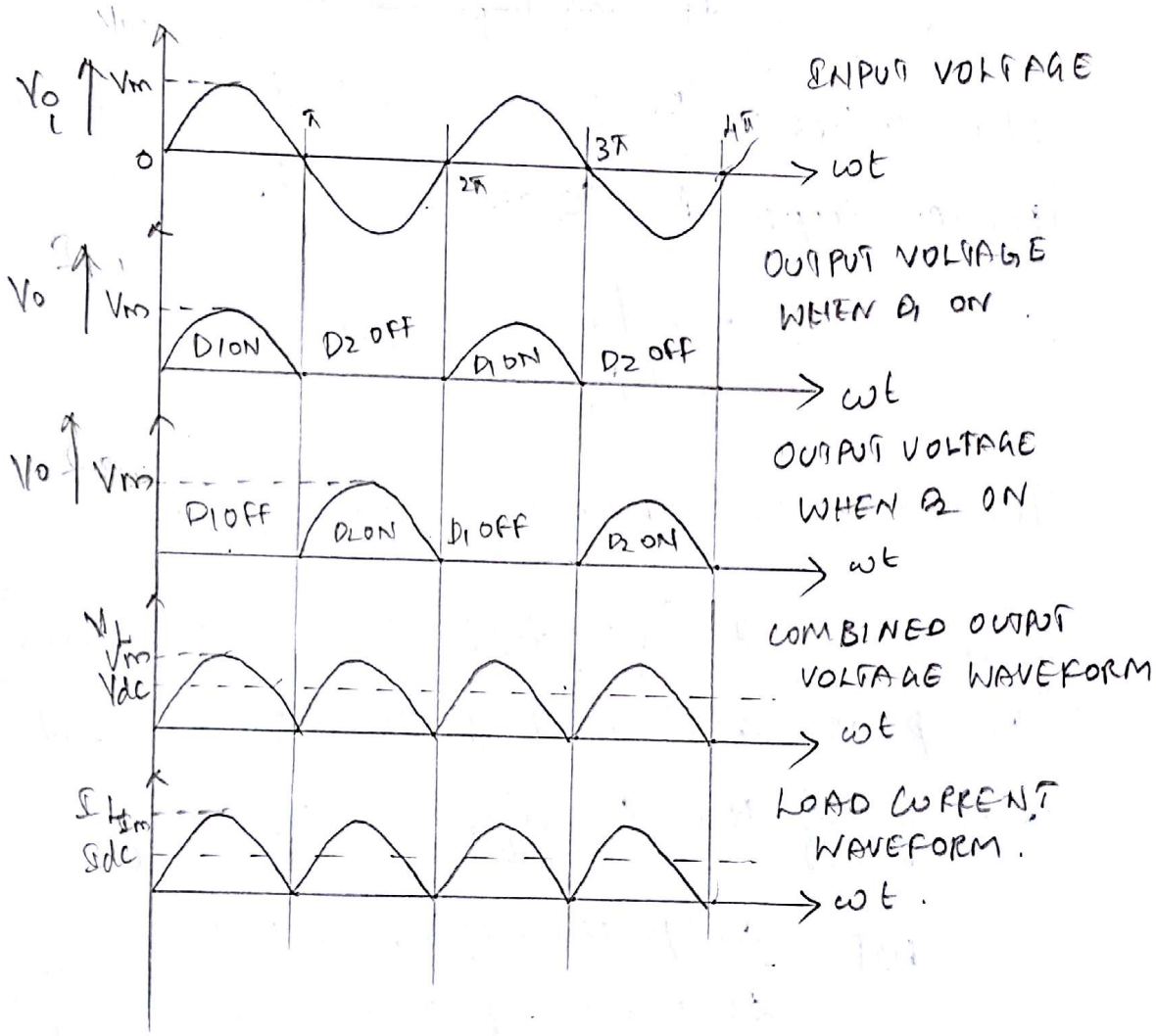

DISADVANTAGES:

* Cost is high, when compared to half wave rectifiers.
* Requires center tap transformer which is costly.
* Higher PIV rated diodes are requires for the operation which is costly.

Scanned by CamScanner

TERMS RELATED TO RECTIFIER:

RECTIFIER EFFICIENCY (η):

It is defined as the ratio between the output DC power and the input AC power supplied to the circuit.

$$\eta = \frac{P_{dc}}{P_{ac}} \times 100\%.$$

TRANSFORMER UTILIZATION FACTOR [TUF]:

It is defined as the ratio between DC power delivered to the load and AC power rating of the transformer secondary.

$$TUF = \frac{\text{DC power delivered to the load}}{\text{AC rating of the transformer secondary}}.$$

$$= \frac{P_{dc}}{P_{ac(rated)}}.$$

RIPPLE FACTOR:

It is defined as the ratio between the RMS value of the AC component and DC component in the ripple output.

Scanned by CamScanner

$$\gamma = \sqrt{\left(\frac{I_{rms}}{I_{dc}}\right)^2 - 1}$$

PEAK INVERSE VOLTAGE (PIV) :-

It is defined as the maximum amount of voltage drop across the diode, when it conducts in reverse biasing.

COMPARISON OF RECTIFIERS:

S.No	CHARACTERISTICS	HALF WAVE RECTIFIER	FULL WAVE RECTIFIER.
1.	Average value of load current I_{DC}	$\frac{I_m}{\pi}$	$\frac{2I_m}{\pi}$.
2.	Average value of load voltage (V_{DC})	$\frac{V_m}{\pi}$	$\frac{2V_m}{\pi}$.
3.	RMS value of load current (I_{RMS})	$\frac{I_m}{2}$	$\frac{I_m}{\sqrt{2}}$.
4.	RMS value of load voltage (V_L (RMS))	$\frac{V_m}{2}$	$\frac{V_m}{\sqrt{2}}$.
5.	DC output power (P_{DC})	$\frac{I_m^2}{\pi^2} \cdot R_L$	$\frac{4I_m^2}{\pi^2} \cdot R_L$
6.	Rectifier efficiency (η_{max})	0.406%.	81.2%.
7.	Ripple factor (γ)	1.21.	0.48.
8.	Peak Inverse Voltage (PIV)	V_m	$2V_m$
9.	Transformer utilization factor (TUF)	0.287.	0.693.

Scanned by CamScanner

BIPOLAR JUNCTION TRANSISTOR:

The transistor was developed by Dr. Shockley in bell laboratories in 1951. It is a three terminal, three layer, two junction device whose output voltage and current depends on input voltage and current. There are two types of transistors.

* NPN transistor
* PNP transistor.

TRANSISTOR CONSTRUCTION:

The transistor is basically a silicon or Germanium crystal containing two PN junctions. The junctions are formed by sandwitching either P-type or N-type semiconductor layers between a pair of opposite types.

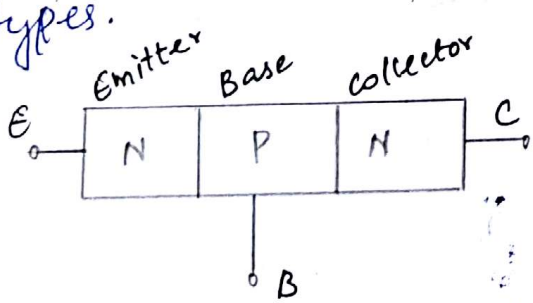

NPN TRANSISTOR

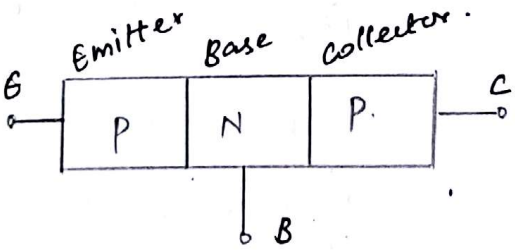

PNP TRANSISTOR.

Scanned by CamScanner

The transistors has three regions namely emitter, base and collector. All these regions has terminals labelled as E for emitter, B for base and C for collector.

The transistor has two junctions J_1 as emitter base junction and J_2 as collector base junction.

EMITTER :

This is the first layer of the transistor which is heavily doped. This supplies the charge carriers [electrons or holes] to the other two regions.

BASE :

This is the middle region of the transistor. The base of the transistor is lightly doped and small in size (ie) it is a thin layer.

COLLECTOR :

This is the last layer of the transistor which is moderately doped. This collector part of a transistor is larger than the emitter and base. The collector collects the charge carrier supplied by the emitter.

Scanned by CamScanner

TRANSISTOR SYMBOLS:

When transistor used as circuit element, it is represented as follows.

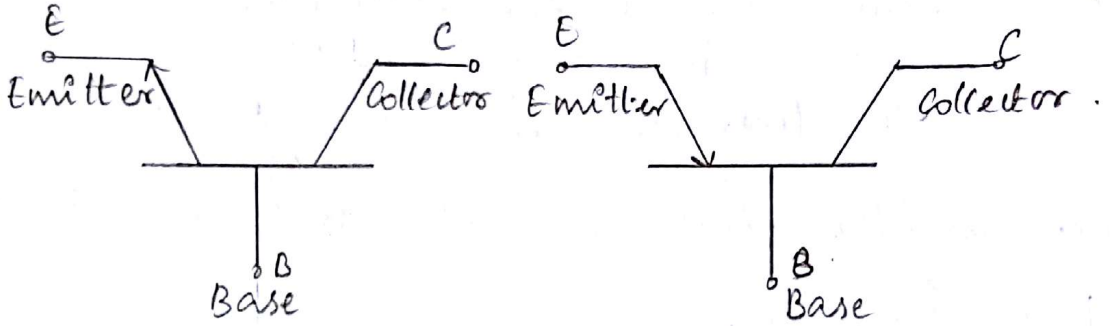

a) Symbol for NPN transistor

b) Symbol for PNP transistor.

The transistor symbol carriers an arrowhead in the emitter from p-region toward N-region. The arrow head indicates the direction of a conventional current flow in a transistor.

TRANSISTOR BIASING:

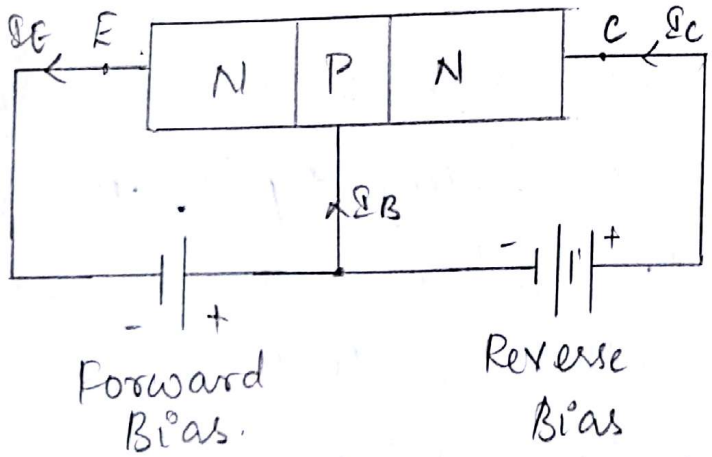

Scanned by CamScanner

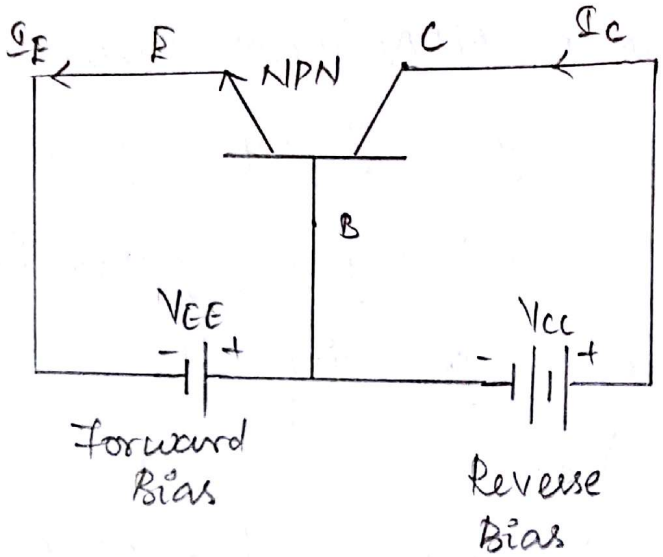

(a) Biasing of NPN transistor

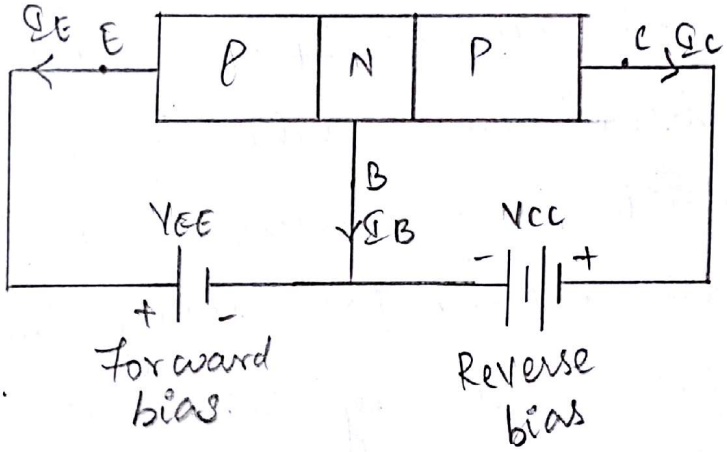

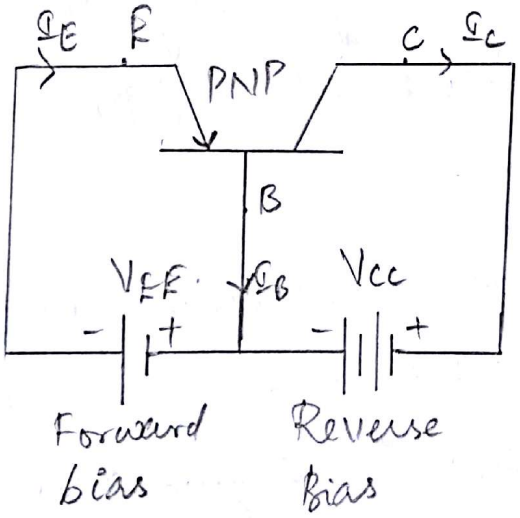

(b) Biasing of PNP transistor

Scanned by CamScanner

1. OPERATION OF NPN TRANSISTOR:

The emitter-base junction is forward biased by the potential V_{EE}. The collector base junction is reverse biased by potential V_{CC}.

The forward bias potential V_{EE}, causes a lot of electrons from the emitter region to crossover the base region. This produces the emitter current I_E. The base is lightly doped, hence few number of electrons from the emitter, recombines with the holes in the base region, producing the base current I_B. The remaining electrons, move towards the collector region, by the collector base potential V_{CC}, which produces collector current I_C.

The collector base junction is reverse biased and a small reverse current flows through the region. This is the collector current I_C. The emitter current I_E is equal to base and collector currents. $I_E = I_B + I_C$.

Scanned by CamScanner

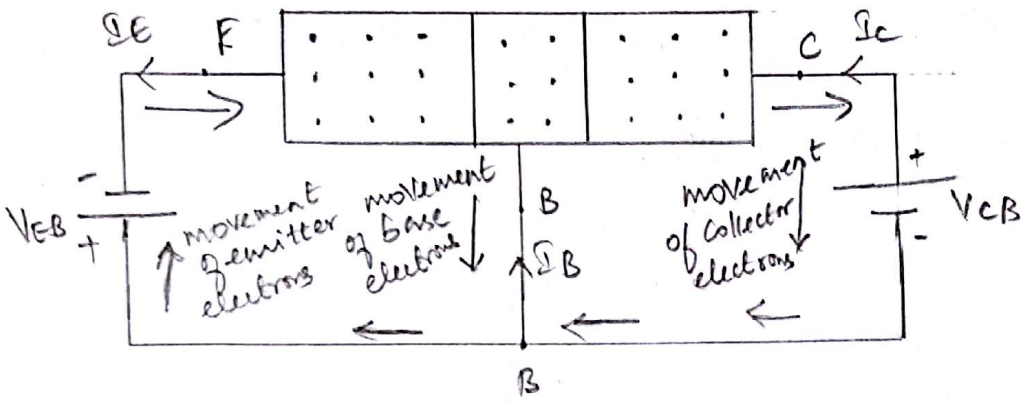

The collector current I_C is also called as the injected current because this current is produced due to electrons injected from the emitter region.

OPERATION OF PNP TRANSISTOR:

The emitter base junction is forward biased and collector base junction is reverse biased. The forward bias causes the holes in the emitter region to flow towards the base region. This constitutes the emitter current I_E. The holes after reaching the base region combine with electrons in the base and constitutes the current called the base current I_B. The base width is made extremely small and holes do not get sufficient electrons for

Scanned by CamScanner

recombination. Thus most of holes diffuse to the collector regions and constitute the collector current I_C.

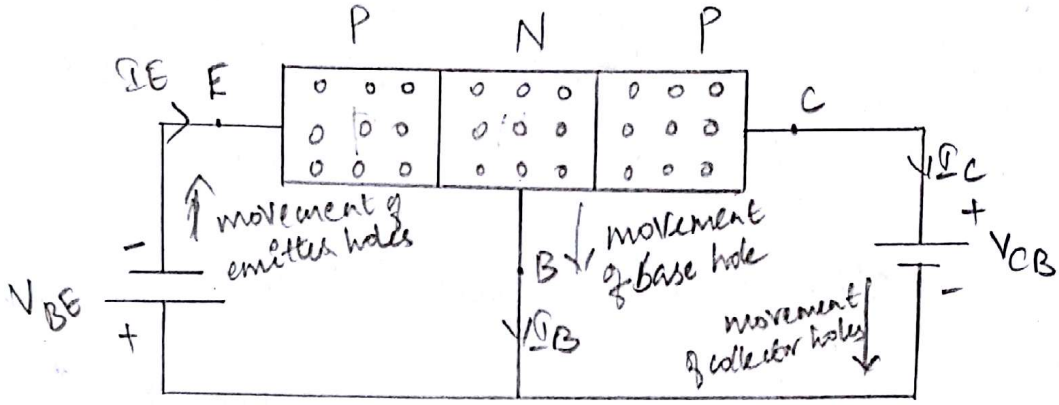

TRANSISTOR CIRCUIT CONFIGURATION:

When a transistor is connected to a circuit, one terminal is connected to the input, one terminal is connected to the output and one terminal is made as common. Depending upon the input, output and common terminals, a transistor can be connected in three configurations. They are

* Common Base (CB) Configuration
* Common Collector (CC) Configuration
* Common ~~Collector~~ Emitter (CE) Configuration

Scanned by CamScanner

COMMON BASE CONFIGURATION:

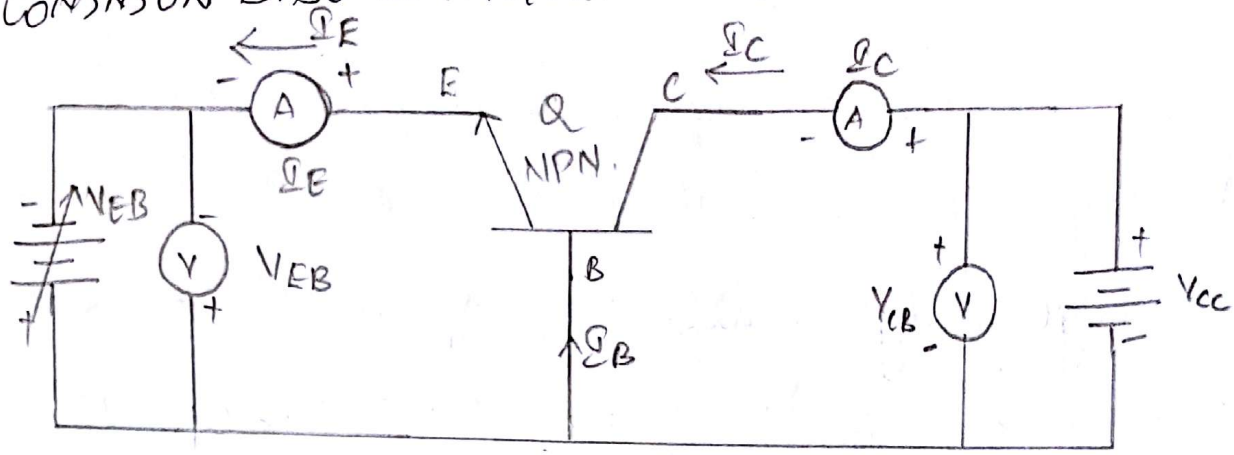

(a) Common base NPN transistor circuit.

In this configuration, emitter is the input terminal, collector is the output terminal and base is the common terminal.

INPUT CHARACTERISTICS:

To determine the input characteristics, the collector base voltage is kept constant at the zero volt. and the emitter current I_E is increased from zero in equal steps by increasing V_{EB}. This is repeated for various fixed values of V_{CB}. A curve is drawn between emitter current and emitter base voltage V_{BE} at constant collector base voltage. V_{CB}.

Scanned by CamScanner

There exists a threshold voltage also known as offset voltage or cut-in voltage, below which the emitter current is negligibly small. The value of ~~knee~~ cut in voltage is 0.5V for silicon & 0.1V for germanium. The value of input resistance is

$$R_i = \frac{\Delta V_{EB}}{\Delta I_E}.$$

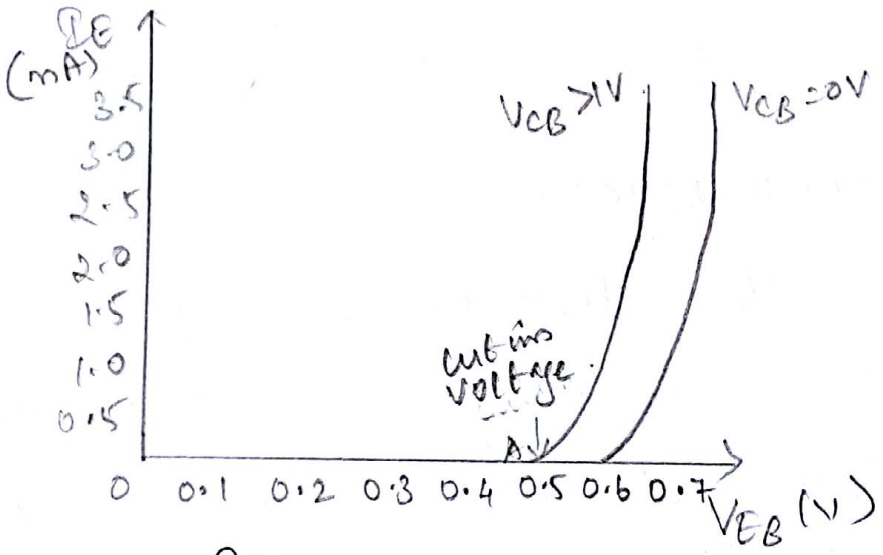

INPUT CHARACTERISTICS.

OUTPUT CHARACTERISTICS:

To determine the output characteristics, the emitter current I_E is kept constant by adjusting emitter base voltage V_{EB}. Then V_{CB} is increased in equal steps and collector current is noted. for each value of I_E.

Scanned by CamScanner

This is repeated for different fixed values of I_E.

The output characteristics of the curve is divided into three regions. namely Saturation region, cut off region and active region. In Saturation region, a small change in V_{CB} results in large value of current. In active region, Collector current is constant and equal to the emitter current. In the cut off region, a small current flows even V_{CB} is zero and emitter current is zero. This is called collector leakage current (I_{CBO}). The value of the output resistance is determined by.

$$R_o = \frac{\Delta V_{CB}}{\Delta I_C}.$$

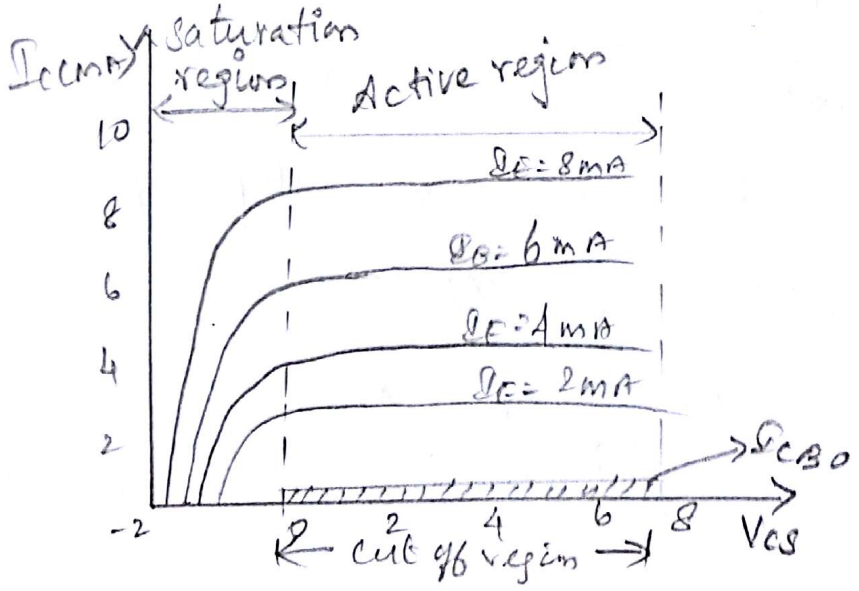

Scanned by CamScanner

COMMON EMITTER CONFIGURATION:

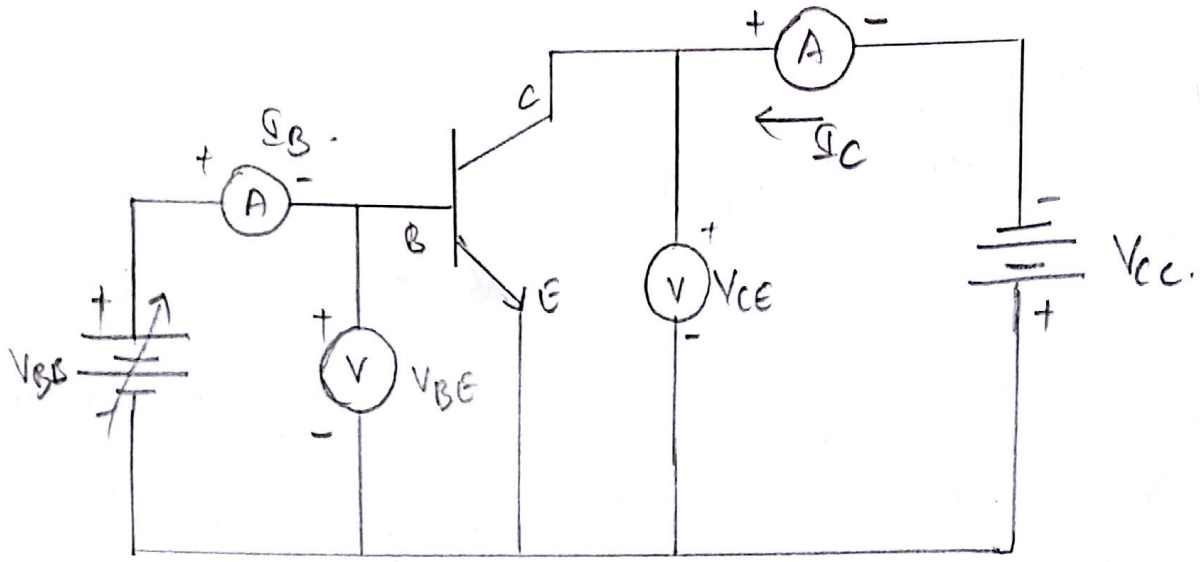

In this configuration, the base is the input terminal, collector is an output terminal and emitter is the common terminal. This is also called as the grounded emitter configuration.

INPUT CHARACTERISTICS:

To determine the input characteristics, the collector to emitter voltage is kept constant at zero volt and base current is increased in steps from zero value by adjusting V_{BE}.

The graph is shown in the figure. There exists a knee voltage as

Scanned by CamScanner

threshold voltage below which the current is very small. The input resistance of a transistor is high as compared to the common base configuration.

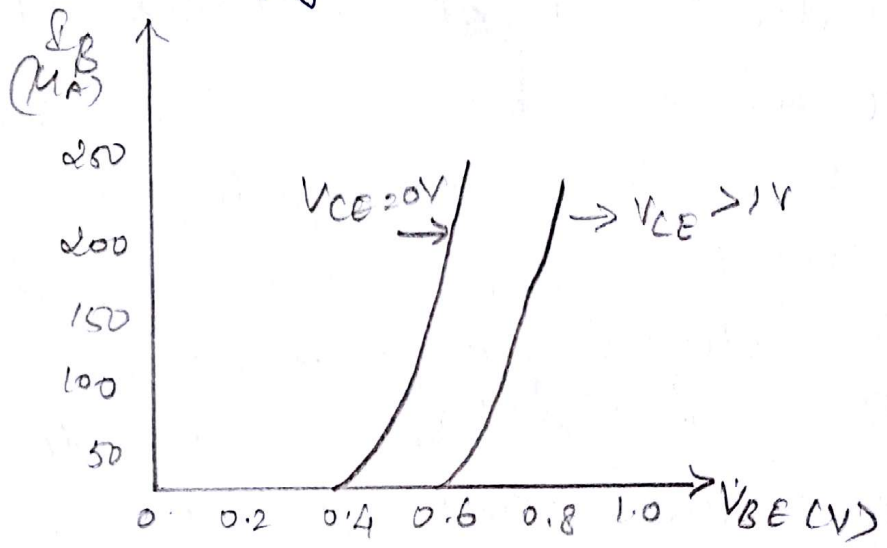

When V_{CE} is increased above 1V, the curve shift downwards. because the width of the depletion ~~are~~ region in the base region increases. This reduces the effective base width which in turn reduces the base current. The resistance is calculated by

$$R_i = \frac{\Delta V_{BE}}{\Delta I_B}.$$

OUTPUT CHARACTERISTICS:

The base current I_B is kept constant by adjusting V_{BE}. The magnitude of

Scanned by CamScanner

V_{CE} is increased in steps, the value of collector current I_C is noted.

When the V_{CE} is increased, the collector current also increases rapidly. When V_{CE} is increased above zero, the collector current increases rapidly to a saturation value. When V_{CE} is increased further, the collector current increases because of the fact that V_{CE} reduces the base current and hence collector current increases. This phenomenon is called as early effect.

When the base current is zero, a small collector current exists called as leakage current. The ac output resistance is given by $R_o = \frac{\Delta V_{CE}}{\Delta I_C}$.

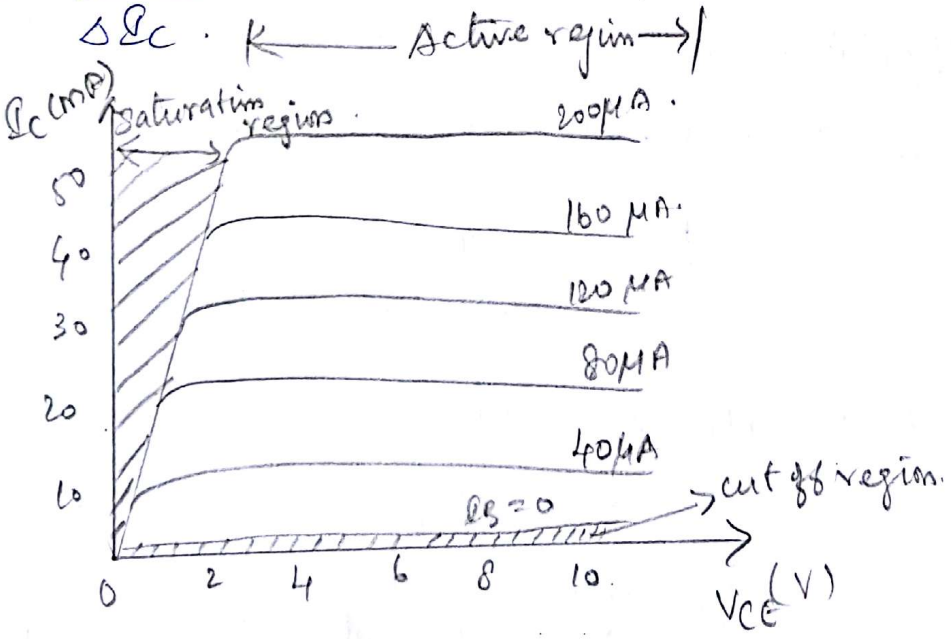

Scanned by CamScanner

COMMON COLLECTOR CONFIGURATION:

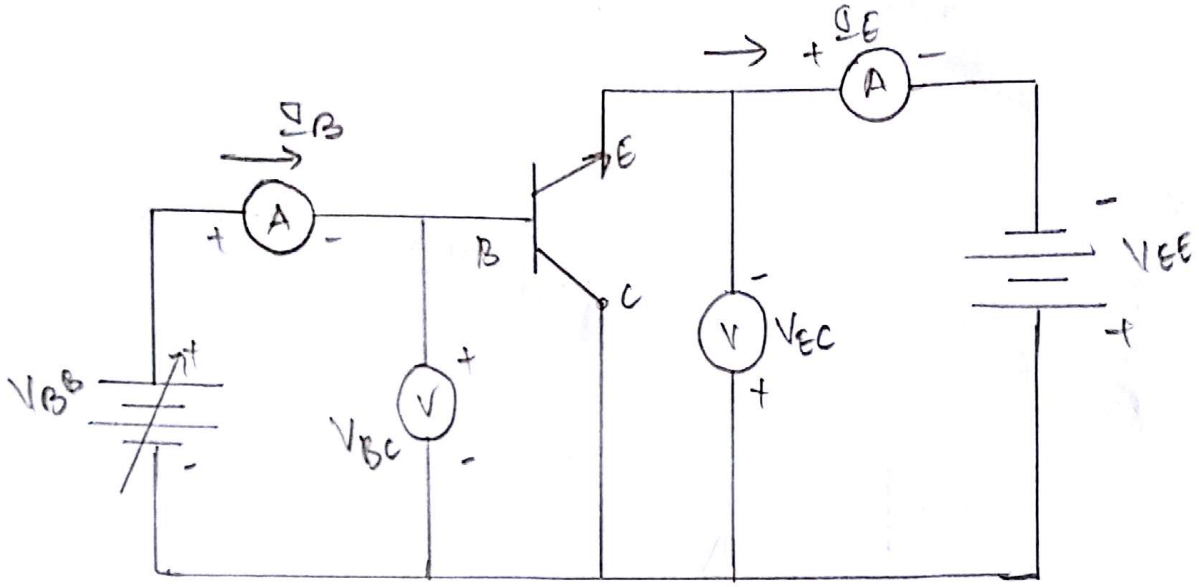

In this configuration, base is the input terminal, emitter is the output terminal and collector is the common terminal.

INPUT CHARACTERISTICS:

To determine the input characteristics, V_{CE} is kept constant and V_{BC}, base collector voltage is increased in equal steps and corresponding increase in I_B is noted. This is repeated for different values of V_{EC} and the graph is plotted between I_B vs V_{BE} for different values of V_{EC}.

Scanned by CamScanner

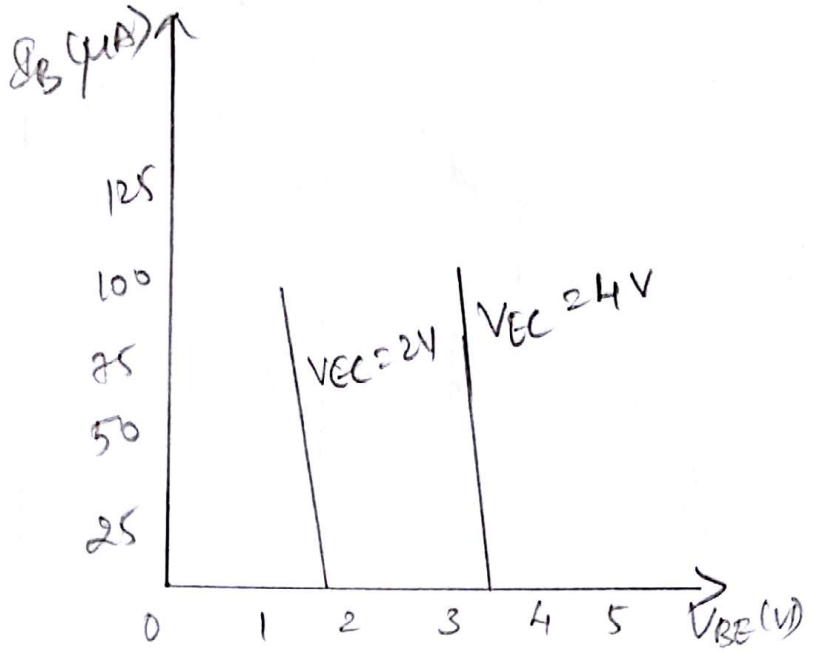

INPUT CHARACTERISTICS of CC.

OUTPUT CHARACTERISTICS:

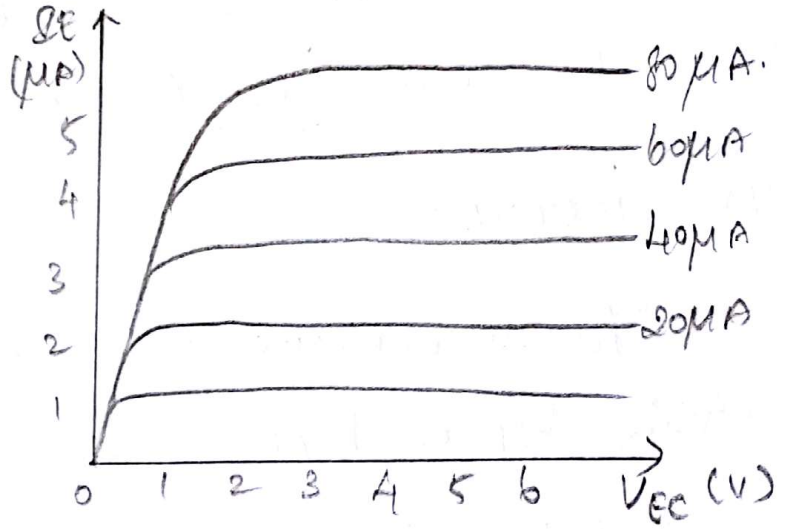

To determine the output characteristics the reading will be taken between emitter to collector voltage (V_{EC}) and emitter current (I_E) at different fixed values of base current I_B. The output current (I_E) is increased with an increase in input current (I_B).

Scanned by CamScanner