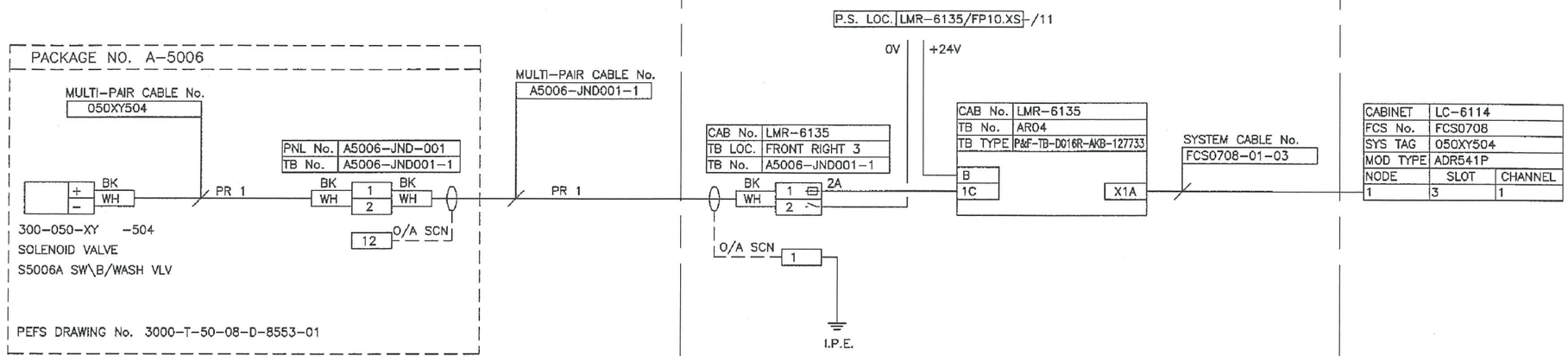

LAYOUT DRAWING No. 3000-T-90-30-D-4114-01

SPECIFIC NOTES

1.

PSN PROJECT	DRAWING NUMBER	DRAWING TITLE
	3000-T-50-72-D-0001-01	A-5021 CABLE BLOCK DIAGRAM

REFERENCE DRAWINGS

REV	ISSUE DATE	BY (DRAWN)	CHKD (DRAWN)	BY (ENGINEERING)	DISCP (ENGINEERING)	PROJ	TRANSL	APPR BY SE	DESCRIPTION OF REVISION
XB	07.07.17	NU	NG		TGM				AS-BUILT FOR RU-6188
XA	11.02.09	RnD	SIH		SON				AS-BUILT NO CHANGE

PSN

ORIGINATING COMPANY

TITLE

INSTRUMENT LOOP DIAGRAM

300-050-X-504

FACILITY NAME

SAKHALIN II PHASE II PROJECT

PILTUN – ASTOKHSKOYE FIELD PLATFORM "PA-B"

SCALE	PROJECT NO.	ORIGIN	MODULE	DISCIPLINE	DOC. TYPE	SEQUENCE NO.	SHEET NO.	REVISION
NTS	3000	T	50	30	D	4900	57	XB