LAB 7

Q1.

a)

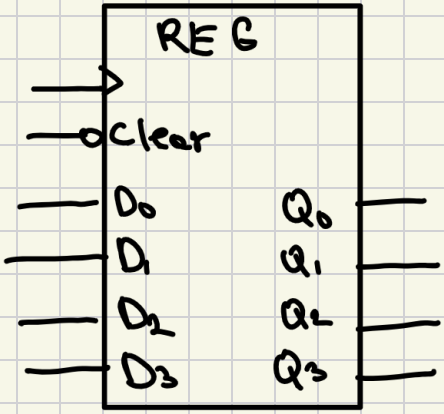

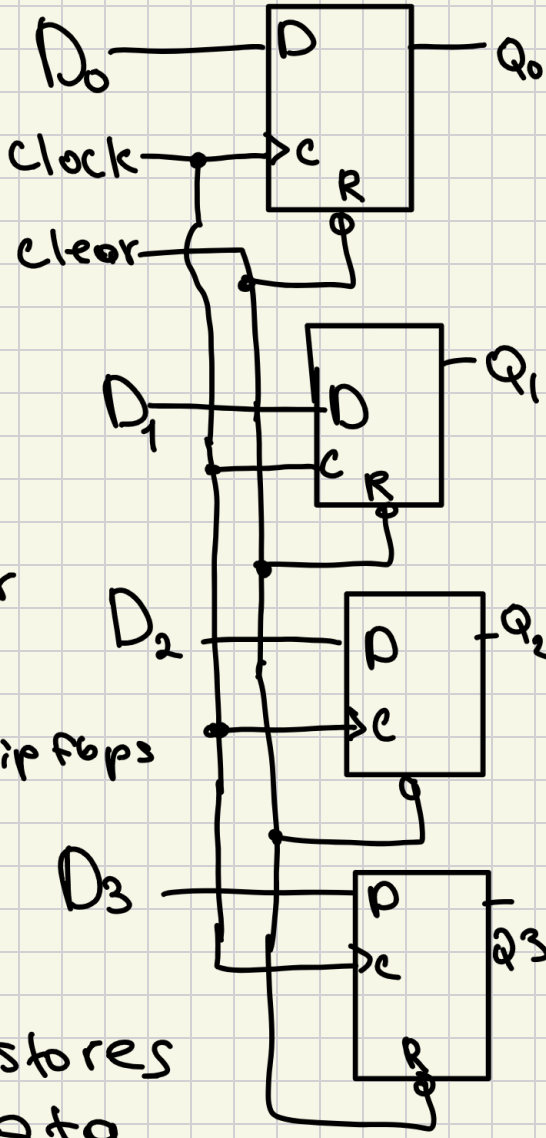

A 4-bit register is constructed using four D flip flops connected in parallel, where each flip-flop stores one bit of data.

The inputs are labeled D0-D3

All flip flops share a common clock signal, ensuring data is stored simultaneously on the active clock edge. A Load control signal can be used with multiplexers to determine wether new data is loaded or the previous value is retained. A Clear signal is also included to reset all outputs to zero when required. The D flip flop follows the charasteristic equation, meaning the output takes the value of input at the clock edge. Thus, the 4-bit register stores and updates 4-bit data in synchronyzed manner

b)

	Clock	Load	Data	Pin val	output
Step 0	low	0	dc	0,0,0,0	0000
Step 1	low rising	1	$D_3=1$ $D_2=0$ $D_1=0$ $D_0=1$	1,0,0,1	0000
Step 2	rising edge	1	$D_3=1$ $D_2=0$ $D_1=0$ $D_0=1$	1,0,0,1	1001
Step 3	Cont.	0	dc	1,00,1	1001

Assume register is initially cleared, so Q = 0000, to load the data 1001, the inputs are set as D3 = 1, D2 = 0, D1 = 0, D0 = 1 and the LOAD signal is made Before the clock edge, the register doesnt change and continues to hold its previous value. On the rising edge of the clock, all flip flop simultaneously

capture their respective inputs. Thus, Q3=1 Q2=0 Q1=0 Q0=1 making the register output 1001. After loading, the Load signal is set to 0, placing the registers in hold mode. The stored value remains unchanged untill a new load operation occurs. Only one clock cycle is required to load data.

Q2

a)

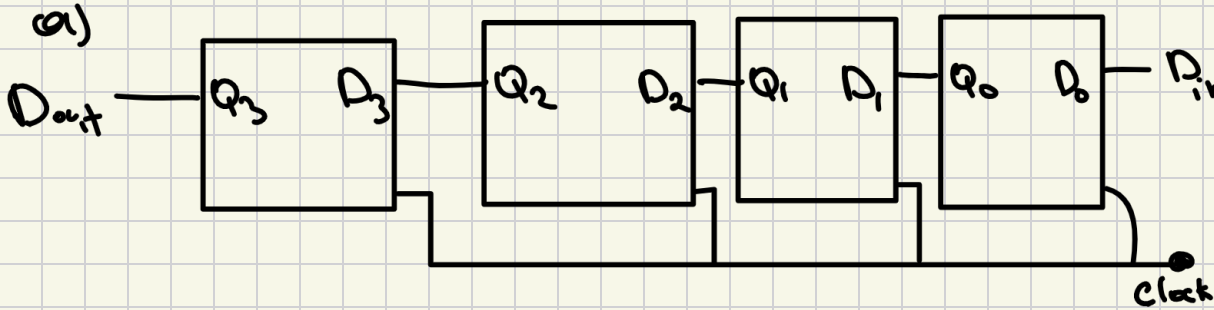

A right-to-left register moves data from the least sign. bit

towards the most sign. bit.
It is constructed using D flip flops connected in series, where each flip-flop recieves input from its adjacent right flip flop. The serial input is applied to the rightmost flip flop and on every clock edge, data shifts one position to the left. Thus, bits propogate form Q0-Q3 with each clock cycle.

b) For a shift register data is loaded serially so one bit enters the register per clock cycle.

Therefore, for a n-bit register

LOAD requires n clock cycles. Similarly, during READ, one bit shifted out per clock cycle, so it also requires n clock cycles. The shifting occurs on each active clock edge, moving data through the flip flops. Hence, LOAD + READ together require 2n clock cycles. For a 4-bit register, this is 8 clock cycles.

Q3)

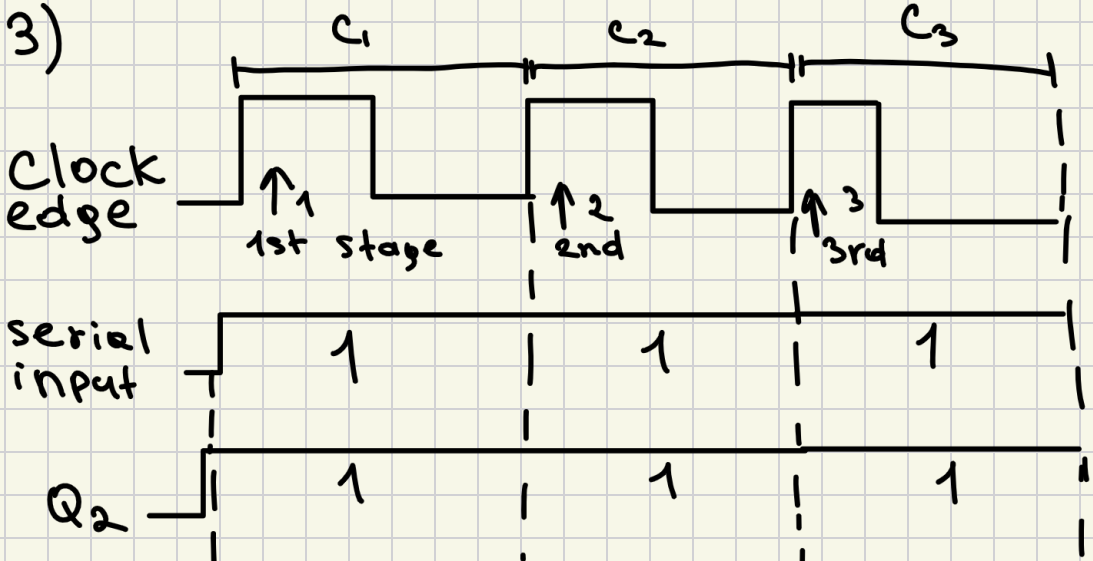

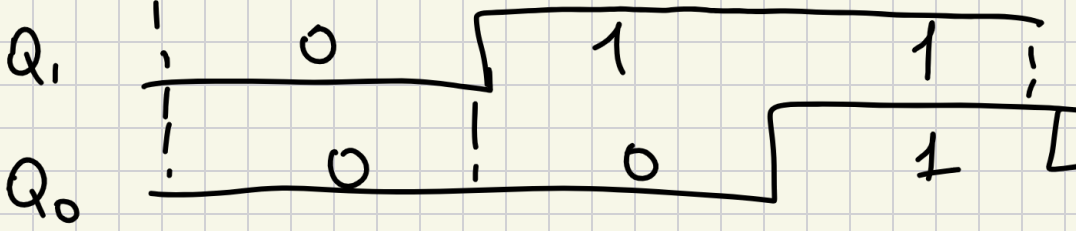

A 3 bit right shift register loads data serially, with one bit entering on each clock cycle. On the first clock edge the first '1' enters Q0, on the second, It shifts to Q1 while the next '1' enters Q0. On the third clock edge, the bits shift again, resulting in Q2Q1Q0 = 111. A total of 3 clock cycles are required to store 3-bit data.

Q4.

2-bit storage registrar.

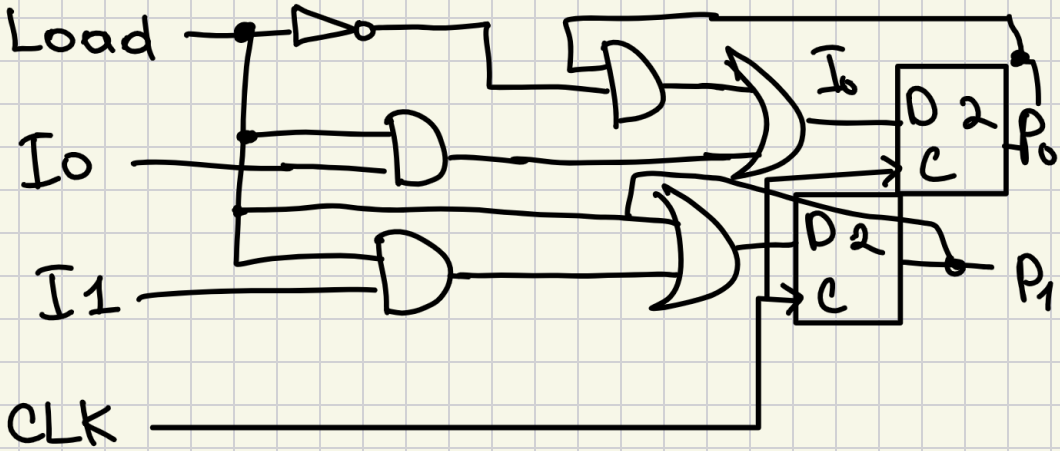

Load	1
I1	1
Io mux	0
P1 = 21	1
P0 = 20	0

Q5
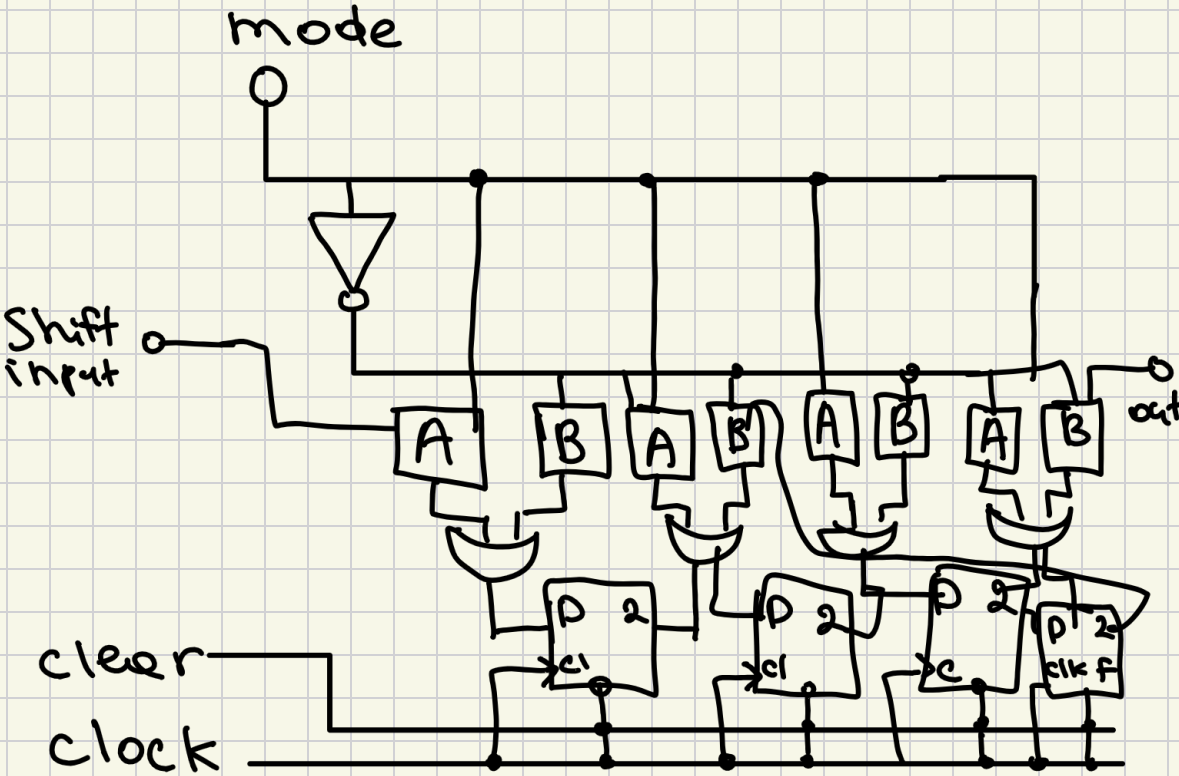
- It can shift data in both left and right directions
- provides flexibility in data manipulation within systems
- Useful in arithmetic operations such as multipl. and division
- Improves efficiency and versatility