INDEX 01

COP AND LOP SECTION 01

ORCA
VISION
INNOVA
REVA
NEXA
ROYAL
BCG
GALAXY
EPAD
HANDRAIL

BUTTON SECTION 11

SQUARE
ROUND
ROUND SLIM
OVAL
TOUCH
DESIGNER

ELECTRONIC SECTION 12

ACCESS CONTROL SYSTEM
INTERCOM

TFT DISPLAY
REGULAR DISPLAY

ANNUNCIATOR
SIRENS

BATTERY BACKUP AND EMERGENCY LIGHTS
DECODER PCB

INDEX 02

- CONTROLLER CARDS ____ 16
- CONTROLLER SECTION ____ 17

  FUJI
  YASKAWA

  INVT
  MONARCH

  HYDRAULIC

  2 SPEED
  ARD & UPS SYSTEM

- PLUG-IN HARNESS ____ 24
- ELEVATOR DRIVES ____ 25

  FUJI
  YASKAWA
  INVT
  MONARCH INTEGRATED

- INSPECTION AND JUNCTION BOX ____ 27
- DOORS & OVERLOAD SENSORS ____ 28
- SWITCHES AND MAGNETS ____ 29
- CONTROL PANEL ACCESSORIES ____ 32
- CABINET AND ACCESSORIES ____ 34

ORCA

"DESIRE TO FEEL
THE TOUCH"

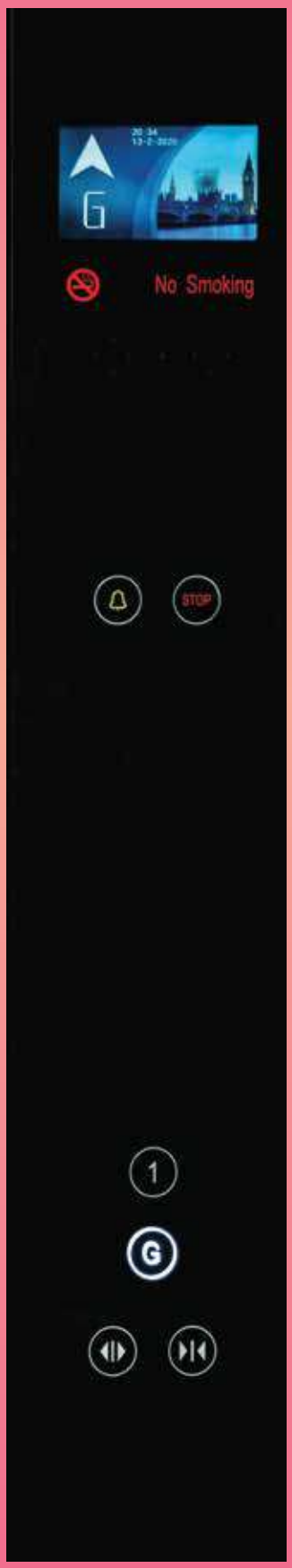

"YOUR SEARCH FOR PREMIUM AND LUXURY ENDS HERE"

VISION

"BUILD WITH INNOVATIONS
THAT STANDS OUT"

INNOVA

"AMAZING BEAUTY
CARFTED WITH METAL"

REVA

NEXA

"EXPERIENCE A NEW WORLD OF SURFACE MOUNT TECHNOLOGY"

"ICONIC PIECES, WHICH
LOOKS ELEGENT FOREVER"

ROYAL

"THE ORIGINAL
BLACK BEAUTY"

BCG

"GOOD THINGS REALLY
DO COME IN TWOS"

GALAXY

EPAD

"SMART, INTELLIGENT AND LOADED
WITH ADVANCE TECHNOLOGY"

"COMBNATION OF CARFTSMANSHIP AND IMAGINATION TO CREATE UNIQUE ARTWORK"

HANDRAIL

BUTTON SECTION

SQUARE

- Shape: Square
- Operating Voltage: 12 / 24 VDC
- Colour: Red
- Available with braille.

ROUND

- Shape: Round
- Operating Voltage: 12 / 24 VDC
- Colour: Blue
- Available with braille.

OVAL

- Shape: Oval
- Operating Voltage: 24 VDC
- Colour: Blue / Red
- Available with braille.

ROUND SLIM

- Shape: Round slim
- Operating Voltage: 24 VDC
- Colour: Red
- Available with braille.

TOUCH

- Capacitive sensing.
- Operating Voltage: 24 VDC
- Dual colour buttons (White/blue, white/red, yellow/green etc)
- Feather touch, robust

DESIGNER

- Custom Design shape
- Operating Voltage: 12 / 24 VDC
- Colour: Blue / Red
- Available with braille.

ACCESS CONTROL SYSTEM

MAS BIOMETRIC

- Operation voltage: 24V DC.
- Sensor module: Biometric scanner.
- Storage capacity : 200 fingers.
- Audio and Visual Indication.

MAS KEYPAD

- Operation voltage: 24V DC.
- Sensor module:3x4 Keyboard.
- 4 digit pin, user changable.
- Audio and Visual Indication.

MAS RFID

- Operation voltage: 24V DC.
- Sensor module: Radio Frequency ID (RFID).
- Storage capacity : 250 RFID cards or Tags.
- Audio and Visual Indication.

ELEVATOR INTERCOM

INTERCOM - A

- Normal operation supply : 24V DC , Emergency operation supply : 12V DC.
- Two-Wire communication protocol.
- Two way communication between supervise room and car.

INTERCOM - B

- Normal and emergency Operation Supply : 12V DC
- Two-Wire communication protocol.
- Three way commnication between supervise room, machine room and car.

TFT DISPLAY

4.3 INCH

- Supply voltage: 24V DC,
- Input type:Sinking.
- Mode of operation: Binary, Gray and 7 Segment
- Programmable background image, arrow and digits.
- View point : Horizontal / Vertical view.

5.6 INCH

- Supply voltage: 24V DC, Input
- Input type:Sinking/Sourcing.
- Mode of operation: Binary, Gray, and 7 Segment.
- Floor level image configuration and customiztion, multiple background images.
- View point : Horizontal / Vertical view.
- Customiztion of digit, Arrow and special message.

7 INCH

- Supply voltage: 24V DC,
- Input type:Sinking.
- Mode of operation: Binary, Gray and 7 Segment
- Programmable background images, arrow and digits.
- View point : Horizontal / Vertical view

REGULAR DISPLAY

7 SEGMENT

- Operation voltage: 24V DC / 12V DC
- Floor range form -3 to 19th. Floor
- Floor Ip: Sinking, Arrow ip: Sinking
- Available for LOP and COP, with or without glower.
- Available in Blue and Red colour

CASCADED

- Operation voltage: 24V DC / 12V DC
- Floor range form -3 to 19th.
- Floor Ip: Sinking, Arrow ip: Sourcing/Sinking
- Available for LOP and COP, with or without glower.
- Available in Blue and Red colour

DOT MATRIX

- Operation voltage: 24V DC / 12V DC,
- Input Type : Sinking/Sourcing
- Floor Inputs: Binary, Binary1, Gray and 7segment.
- Available for LOP and COP, with or without glower.
- Available in Blue and Red colour
- User friendly floor changing program Setting. Special messages are available

ANNUNCIATORS

MLA

- Operation voltage: 24V DC / 12V DC
- Input Type : Sinking/Sourcing
- Input mode: Binary, Binary1, Gray and 7segment.
- Special messages inputs are available (Power Failure, Out of service, Overload etc)
- Languaes: English+Hindi, English+Marathi, English+Tamil, English+Arabic.
- User friendly program Setting.(Floor and music assignment,Language Priority etc)
- No. of music : 4 musics, each music can be enabled or disabled.
- Support special welcome messages & music customization.

MGG

- Operation voltage: 24V DC / 12V DC,
- Input Type : POI, Edge/Level trigger
- Available in TingTong, Arabic suplication for travel & DO announcement (ENG/HINDI/MARATHI/ TELEGU and in combination)
- Support special message & music customization.

EMERGENCY ALARM BOX

- Operation voltage: 12V DC
- Alarm Distance: 7 meters
- Mount type : Wall mount.

SIRENS

MQR - 117

- Piezo Siren MQR-117
- Operating Voltage: 20-25VDC, typical 24VDC
- Current: 80mA (at 24VDC)
- Sound Level : 110dB at 1m in 24VDC
- Mount type : Adjustable surface mount
- Available in 12VDC & 24VDC

MCR - 115

- Micro siren MCR-115
- Operating Voltage : 10.5 to 14.5 VDC, typical 12 VDC,
- Current : 45 mA (at 12V DC)
- Sound Level : 102dB at 1m in 12VDC
- Mount type : Fixed surface mount

KEN - 124

- Electronix Siren KEN-124
- Operating Voltage: 10.5 to 13.5 VDC, typical 12VDC
- Current: 750 mA (at 12V DC)
- Sound Level : 120dB at 1m in 12VDC
- Mount type : Adjustable Mounting bracket

MBC

- Supply Voltage: 220VAC
- Output voltage: 12VDC
- Control Output voltage for normal and emergency mode.
- Din-Rail Mount Design.
- Battery capacity: 600mAH, 12VDC

MEL - 1

- Operation voltage: 12VDC
- WATT: 2W
- LUX: 1K
- Customize design to fix in COP
- Surface mount design

MEL - 3

- Operation voltage: 12VDC
- WATT: 2W
- LUX: 1K
- Slim type Emergency light.
- Surface mount design.
- Customize to fix in COP.

DECODER PCB

MCBS

- Operation voltage: 24V DC / 12V DC
- Operation method: Relay
- I/O Type : Sinking/Sourcing (both configurable)
- Decoder type: Binary to 7seg, Binary1 to 7seg, Gray to 7seg.

MCBD

- Operation voltage: 24V DC / 12V DC
- Operation method: TTL
- I/O type : Sinking/Sourcing (both configurable)
- Decoder type: Binary/Binary 1/Gray to 7Seg and Binary/Binary 1/Gray to Decimal

MCDB

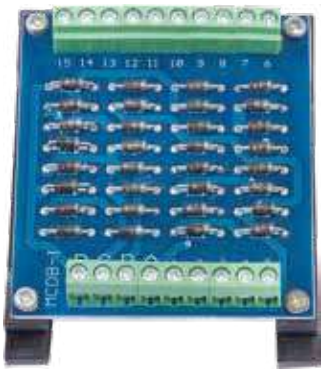

- Operation voltage: 24V DC / 12V DC
- I/O Type : Sinking/Sourcing (output polarity will be same as input)
- Decoder type: Decimal to Binary

MCDS

- Operation voltage: 24V DC / 12V DC
- I/O Type : Sinking/Sourcing (output polarity will be same as input)
- Decoder type: Decimal to Seven segment

ELEVATOR CONTROLLER CARD

- Suitable for VVVF, Hydraulic & 2-Speed lift control.
- Full collective (6 stop)/down collective (8 stop) with Auto/manual door.
- Floor indicator : Seven segment, Binary & Gray.
- Communication : Parallel.
- Max up to 16 stop down collective / 11 stop full collective(with Extension).
- Built in LED indicators for all input & output; hence easy for troubleshooting.
- Special Features: Attendance, Fireman, Stop, Overload, ARD, PTC and Arrival Gong etc.
- All parameters are password protected.

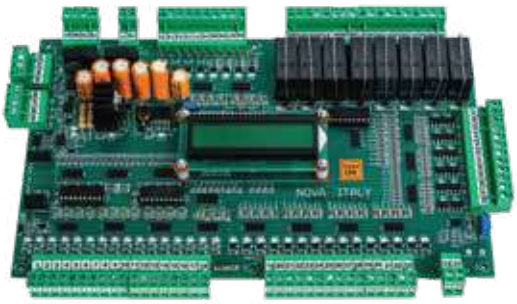

NOVA

- Available from 3.7kw to 11kw.
- Suitable for 1 phase and 3 phase door.
- Monitoring of car safety circuit before and during the operation.
- Overload managenet for extra load.
- Easy Installation and safe operation.
- Portection against short circuit and over current.

MAS ARD

- Hybrid display and keypad module , that can be remove after programmimg.
- Compliance with UNI EN 81-1/2 STANDARD.
- Suitable for both traction and hydraulic project.
- Lift up to 24 stops down collective/full collective plants, parallel & serial connection.
- Floor indicator : Seven segment, Binary, Gray & Decimal.
- Duplex and multiplex management.
- Security circuit monitoring and drive contactors control up to 230Vac.
- Suitable for multiple door opeing in single elevator.
- Serial and semi serial connection tested up to 120mt without shielded cable.
- Remote monitoring feature.

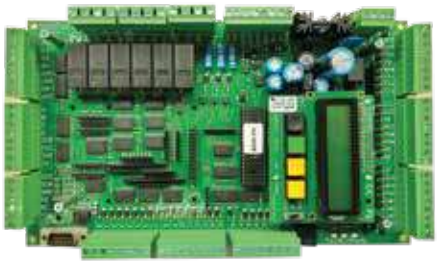

VEGA

- Suitable for electric and hydraulic lift.
- Suitable for max 64 stops.
- Certified with EN 81/50.
- Support UCM(Unintended car movement).
- Communication support car serial and full serial.
- After an error , system send SMS to defined phone number.
- Automatic re-levelling of hydraulic lift.
- On Board phase failure Protection.

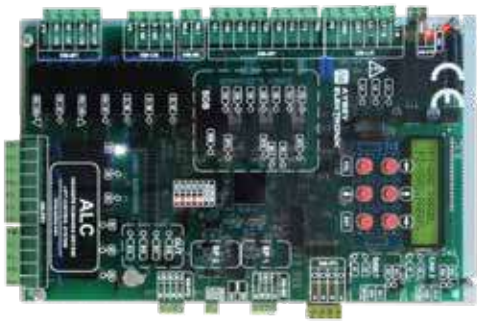

S - TYPE SERIAL

NOVA FRENIC-ACE

- Suitable for 2 speed , hydraulic and VVVF Lift.
- Communication mode - Parallel.
- Operating voltage - 24VDC/12VDC.
- Cabinet Size -1230x540x250.
- Door Type - Auto / Manual.
- Top Cover protection for DBR.
- Suitable for both wall mount and floor mount.
- Compatible for all type of drive make.
- Full collective (6 stop)/down collective (8 stop).

NOVA FRENIC-LIFT MRL

- Design for gearless application close loop.
- Motor Capacity - 4kw to 11kw with UPS ARD support.
- Communication mode - Parallel.
- Operating voltage - 24VDC/12VDC.
- Cabinet Size -1800*400*265.
- Stand alone design for both manual and auto door function.
- Support upto 15 stops.
- Built in ARD provision with 2.4KVA UPS support.

VEGA YASKAWA

- Motor Capacity - 7.5Kw to 18.5Kw and above.
- Communication mode - Parallel/Complete Serial/Car Serial
- Operating voltage - 24VDC
- Cabinet Size -1000*600*250
- Lift up to 24 stops down collective/full collective plants, parallel & serial connection.
- Floor indicator : Seven segment, Binary, Gray & Decimal
- Duplex and multiplex management.
- Security circuit monitoring and drive contactors control up to 230Vac.
- Compatible with close & open Loop application.
- Remote monitoring feature.
- Easy Installation and safe operation.
- On Board inspection switches.
- Multiple door access(max 3 at floor).

ENCODER SELECTION CHART		
ENCODER TYPE	PG CARD TYPE	DESCRIPTION
Complementary Signal Encoder	PG-B3	For speed feedback input by connecting a motor encoder Input: 3 track (can be used with one or two tracks), for HTL encoder connection, 50KHz max Output: 3 track, open collector Encoder power supply: 12V DC, max current 200 mA
Line Driver Encoder	PG-X3	For speed feedback input by connecting a motor encoder Input: 3 track (can be used with one or two tracks), line driver, 300 KHz max Output: 3 track, line driver Encoder power supply: 5V DC or 12 V DC, max current 200 mA
EnDat Encoder	PG-F3	Encoder type: EnDat 2.1/01, EnDat 2.2/01 (HEIDENHAIN) Maximum input frequency: 50 KHz Pulse monitor: Matches RS-422 level Output voltage: 5 V DC±5%, 8 V±10% Maximum output current: 200 mA Wiring length: 20 m max. for the encoder, 30 m max. for the Pulse Monitor.
ERN1387 Encoder	PG-E3	Encoder type: ERN1387 (HEIDENHAIN) Maximum input frequency: 50 KHz Pulse monitor: Matches RS-422 level Output voltage: 5 V DC±5% Maximum output current: 200 mA Wiring length: 20 m max. for the encoder, 30 m max. for the pulse monitor

NOVA - INVT GD300L

- Compatible for both geared and gearless application.
- Motor Capacity - 4Kw to 11Kw and above.
- Communication mode - Parallel
- Operating voltage - 24V DC/12V DC
- Cabinet Size -1230x540x250
- Door Type - Auto / Manual
- Max. Rescue runs per day- 3 to 4 times.
- Full collective (6 stop)/down collective (8 stop).

INVT-EC160 INTEGRATED MRL

- Communication mode - Parallel/Serial
- Motor Capacity - 4Kw to 22Kw
- Cabinet Size -1800*400*265
- Integrated design, simple wiring and easy debugging
- The highest floor: 64th floor Max. speed: 8m/s
- EMC meets C3 standards.
- Pre –Door opening function
- Double door operation support
- Support GPRS basic monitoring
- Intelligent, network-based group control as much as 8 lift.
- Parameter debugging can be done with the help of mobile app
- Encoder interface of synchronous and Asynchronous motor, achieving speed control and position control with high accuracy
- CAN serial communication, improving data transmission capacity and enhancing communication reliability.
- Automatic car position correction, top-hitting and bottom-clashing protection.

MONARCH - NICE 1000+

- Motor Capacity - 3.7Kw to 11Kw and above.
- Intergated close loop controller.
- Communication mode - Parallel
- Energy Saving relay.
- Operating voltage - 24VDC
- Cabinet Size -1230x540x250
- Operation - Close loop
- Standard 8 floor full collective, expansion upto 12 floor full collective.
- Selectable door control mode (Auto, Manual)
- It follows N-Curve lift operation.
- Rescue function ready with external single phase 220V UPS.

MONARCH - NICE 100+

- Inegrated Open Loop Controller
- Motor Capacity - 3.7Kw to 11Kw
- Operation - Open loop + Parallel communication
- Operating voltage - 24V DC
- Cabinet Size - 1230x540x250
- Selectable door control mode (Auto, Manual)
- Standard 6 floor full collective, expansion upto 12 floor full collective.
- Rescue function ready with external single phase 220V UPS.
- It follows the S-Curve operation.

E-TYPE SERIAL VVVF CONTROLLER

- Certified with EN 81/50.
- Suitable for max 64 stops.
- Communication support car serial and full serial.
- After an error , system send SMS to defined phone number.
- Support UCM(Unintended car movement).
- Maximum Number of group operation is 8.
- Remote Monitoring of elevator.
- Maximum Number of error record is 250.
- Date and real time clock.
- S-Curve lift operation with smooth ride quality.
- Car Position Detactio Method:- Magnetic Switch, Incremantal Encoder and Absolute Encoder.
- Motor overlaod and overcurrent protection.
- 14 Programmable output and 32 Programmable input.

E-TYPE SERIAL HYDRAULIC CONTROLLER

- Certified with EN 81/50.
- Communication support car serial and full serial.
- After an error , system send SMS to defined phone number.
- Support UCM(Unintended car movement).
- Maximum Number of group operation :- 8.
- Automatic relvelling of hydraulic lift.
- Certified with EN 81/28 : Remote Alarms for lift.
- Certified with EN 81/72 : Firefighter lifts.
- Certified with EN 81/73 : Behaviour of lift in the event of fire.
- Remote Monitoring feature.
- Maximum Number of error record is 250.
- Date and real time clock.

VEGA 2-SPEED

- Communication mode - Parallel/ Semi-Serial
- Operating voltage - 24V DC
- Cabinet Size - 700*600*210
- Multiple door access(max 3 at floor)
- Floor indicator : Seven segment, Binary, Gray & Decimal
- Duplex and multiplex management.
- Protection against short circuit and over current
- Remote monitoring feature.
- Security circuit monitoring and drive contactors control up to 230V AC.
- Switch gear make :- Schneider electric.

VEGA HYDRAULIC

- Communication mode - Parallel/Car Serial
- Operating voltage - 24V DC
- Cabinet Size -1000*600*250
- Multiple door access(max 3 at floor)
- In Built Auto re-leveling function.
- Floor indicator : Seven segment, Binary, Gray & Decimal
- Duplex and multiplex management.
- Star-Delta conversion time can be adjusted through parameter.
- Protection against short circuit and over current
- Remote monitoring feature.
- Security circuit monitoring and drive contactors control up to 230V AC.

MAS ARD

- Monitoring of car safety circuit before and during the operation.
- Can be integrated with all type of control panel.
- Overload managenet for extra load.
- Easy Installation and safe operation.
- Motor Capacity - 3.7kw to 11kw Geared motor.
- Cabinet Size -700*600*210
- Suitable for 1 phase and 3 phase door.
- Operating voltage - 24VDC
- Smart battery charger.
- Short circuit and over load protection.
- Onboard indication of 3-phase and 1-phase current consumption.
- SMPS used for stable DC supply

UPS SYSTEM

- UPS Capacity :- 2.4KVA with 2 nos 12V 18Ah battery
- Short Circuit Protection.
- Wide Input Range from 90V AC to 280V AC
- Horizontal, Vertical and Wall Mounting Option
- Cold Start Function
- Intelligent 2 step battery charger.
- High Frequency and high Efficiency Design.

SHAFT HARNESS

TRAVELLING HARNESS

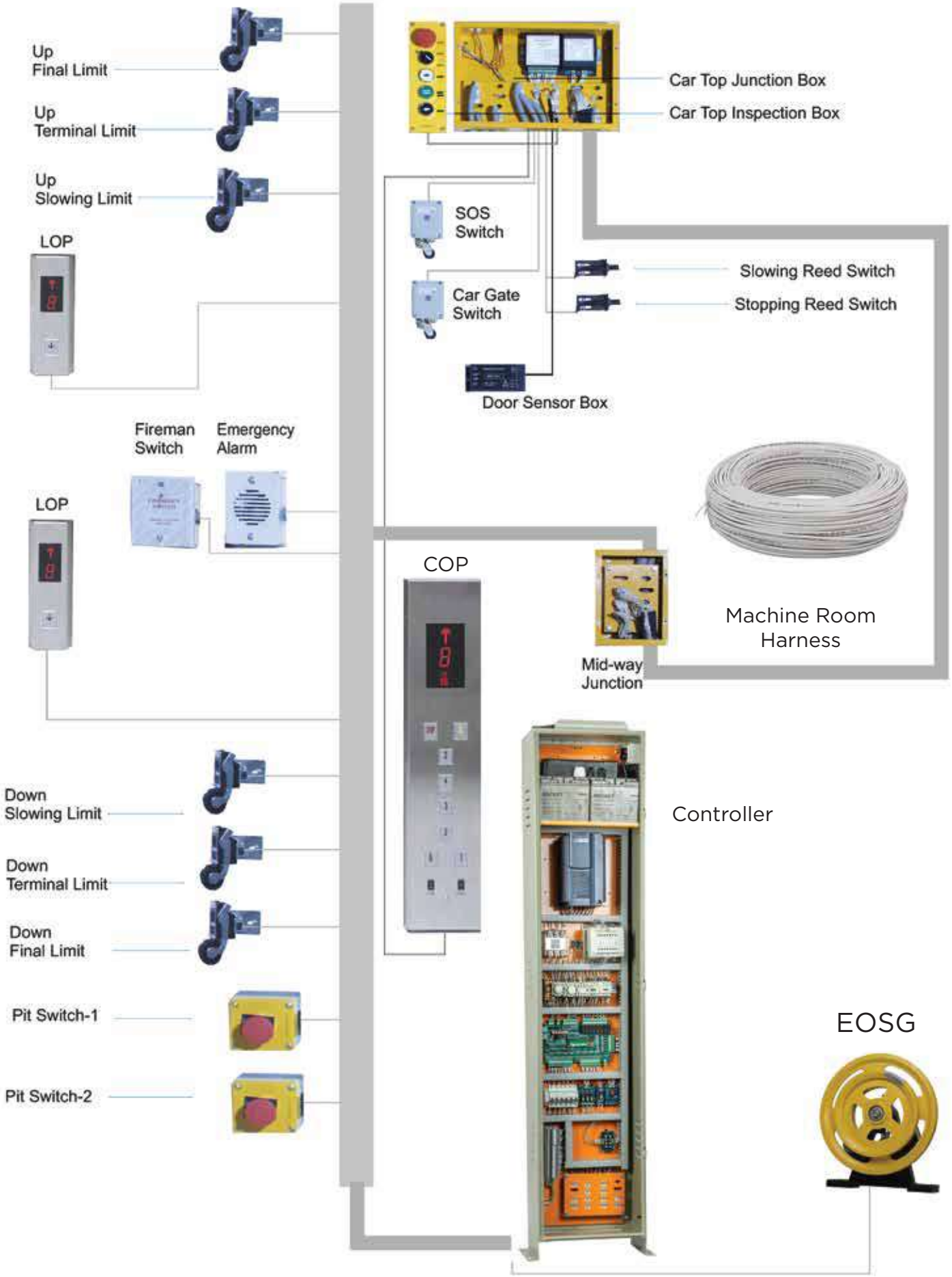

ELEVATOR DRIVES

FUJI

FRENIC LIFT BOOK

- Applicable for close and open loop application.
- Book type frame up to 15 kW
- Contactorless solution compliant to EN 81-1 + A3 and EN 81-20
- Different energy saving levels according to ISO 25745
- Rescue operation available by means of UPS or batteries

FRENIC ACE

- Motor vector control with PG (with optional card).
- FRENIC-Ace has two different multi-function keypads available.
- Sensorless dynamic torque vector control.
- Rescue operation available by the mean of Single Phase UPS.
- Power - 3.7kw to 18.5kw and above.
- Current - 9 Amp to 36A and above.

YASKAWA

L1000

- Operation - Close loop/Open Loop
- Power - 3.7Kw to 18.5Kw and above
- Current - 9 A to 39 A
- Single drive for either IM or PM motor control
- Auto-tuning routines optimally match L1000A to IM/PM motors (coupled or uncoupled)
- Powerful keypad and I/O interface to simplify elevator controller integration
- YASKAWA Quality – designed for more than 70,000 hours of maintenance-free operation
- light load function for UPS operation

V1000

- Power - three-phase 0.2 to 15 Kw.
- Rated output current (A) 1.2 A to 31 A.
- Current vector control.
- High starting torque (200% / 0.5 Hz).
- 1:100 speed control range.
- Low-noise Low carrier technology.
- Safety embedded: EN954-1 safety cat. 3, EN6158 SIL II and EN60204-1 Stop category 0.
- Simple and efficient brake sequence.

INVT

EC160 INTEGRATED

- Operation - Close loop + Parallel/ Serial communication.
- Power - 4Kw to 55Kw.
- Low voltage emergency rescue mode of AC220V single-phase UPS, light load direction search.
- Safety enabling hardware input conform to EN81 standards.
- 24 digital inputs, 9~30V.
- 6 relay NO outputs, 5 A/250 V AC.

GD300L

- Compatible for Geared and Gearless Motor.
- Rescue Operation available by the mean of single phase UPS.
- Precise S-Curve setting for smooth ride operation.
- Overload capacity :- 150% of rated current for one minute.
- Power - 4Kw to 18.5Kw.
- Current - 9 A to 38 A.

MONARCH INTEGRATED

NICE-1000+

- Maximum Speed 1.75m/s.
- Operation - Close loop + Parallel communication.
- Power - 3.7Kw to 18.5Kw.
- Standard 8 floor full collective, expansion upto 12 floor full collective.
- Rescue function ready with external single phase 220 V AC UPS.
- 24 input point for switch signal.

NICE-100+

- Maximum Speed 1m/s.
- Power Rang : 3 Phase - 3.7Kw to 11Kw.
- Selectable door control mode.
- Operation - Open loop + Parallel communication.
- Standard 6 floor full collective, expansion upto 12 floor full collective.
- Smooth ride performance.
- Rescue function ready with external single phase 220V AC UPS.

EMI FILTER

- Rated Voltage : 440 V AC/3 PH/50,60Hz
- Rated current : 30A to 60A at room temp 40°C
- Avialiable in 1 stage and 2 stage filter.
- In Conformation with EMC Directive 2004/108/EC, Low Voltage Directive 2006/95/EC

DBR

FUJI FRENIC ACE				
Inverter Model	Inverter Rated (kw)	Inverter Rated Current(A)	DBR Ohmic Value (Ω)	DBR Power Rating (Kw)
FRN0012E2S-4GALM3X	3.7	9	130	1.0
FRN0022E2S-4GALM3X	5.5	13	80	1.5
FRN0029E2S-4GALM3X	7.5	18	60	2.0
FRN0037E2S-4GALM3X	11	24	40	2.5
FRN0044E2S-4GALM3X	15	30	35	3.5

FRENIC LIFT(FUJI)				
Inverter Model	Inverter Rated (Kw)	Inverter Rated Current(A)	DBR Ohmic Value	DBR Power Rating (Kw)
FRN2.2LM1S-7AA(Home lift)	2.2	9	50	1.1
FRN4.0LM1S-4AA	4	9.5	96	1.0
FRN5.5LM1S-4AA	5.5	13.5	64	1.0
FRN7.5LM1S-4AA	7.5	18.5	48	2.0
FRN11LM1S-4AA	11	24.5	24	4.0
FRN15LM1S-4AA	15	32	48(2 nos in parallel)	2.5(2 nos in parallel)
FRN18.5LM1S-4AA	18.5	39	16	5.0
FRN22LM1S-4AA	22	45	32(2 nos in parallel)	3.5(2 nos in parallel)
FRN30LM1S-4AA	30	60	10	8.0
FRN37LM1S-4AA	37	75	10	10
FRN45LM1S-4AA	45	91	8	12

GD300L(INVT)				
Inverter Model	Inverter Rated (Kw)	Inverter Rated Current(A)	DBR Ohmic Value (Ω)	DBR Power Rating (Kw)
GD300L-004G-4	4	9.5	130	1
GD300L-5R5G-4	5.5	14	80	1.5
GD300L-7R5G-4	7.5	18.5	65	2
GD300L-011G-4	11	25	40	4
GD300L-015G-4	15	32	32	4.5
GD300L-018G-4	18	38	28	5
GD300L-022G-4	22	45	22	7
GD300L-030G-4	30	60	17	10

EC160 INTREGATED(INVT)				
Inverter Model	Inverter Rated (Kw)	Inverter Rated Current(A)	DBR Ohmic Value(Ω)	DBR Power Rating(Kw)
EC160-004-4	4	11	75	1.2
EC160-5R5-4	5.5	13	55	1.5
EC160-7R5-4	7.5	18.5	50	2
EC160-011-4	11	27	40	4
EC160-015-4	15	34	32	4.5
EC160-018-4	18	38	28	5
EC160-022-4	22	46	22	7
EC160-030-4	30	62	20	10
EC160-037-4	37	75	14	11
EC160-045-4	45	92	11	13.5
EC160-055-4	55	115	9	16.5

Hpmont MT70/71 INTREGATED					
Inverter Model	Inverter Rated (Kw)	Inverter Rated Current(A)	DBR Ohmic Value	DBR Power Rating (Kw)	
				For Syn.	For Asyn.
MT70/71-4T3P7	3.7	9	80	1.6	1.2
MT70/71-4T5P5	5.5	13	70	2	1.6
MT70/71-4T7P5	7.5	18	64	3.2	2
MT70/71-4T011	11	27	40	4	3.2

MONARCH 100 + (INTREGATED),1000+(INTREGRATED)				
Inverter Model	Inverter Rated (Kw)	Inverter Rated Current(A)	DBR Ohmic Value	DBR Power Rating (Kw)
NICE-L-I-4003	3.7	9	130	1.1
NICE-L-I-4005	5.5	13	90	1.6
NICE-L-I-4007	7.5	17	65	2.5
NICE-L-I-4011	11	27	43	3.5
NICE-L-I-4015	15	32	35	4.5

INSPECTION AND JUNCTION BOX

EIB-01

- Pendent type inspection box.
- Easy handling and installation.
- Elegant look and fine finishing.
- Long life and Durable.

EIB-02

- Standard cartop inspection box.
- Lamp guard on the top for protection.
- Controlled 230VAC port for the maintenance tool connection on cartop.
- Stable product with high performance and long lasting.

EIJB-01

- Elevator inspection and junction box
- Certified component with proper functionally test.
- Selector switch with 1 NO and 1 NC element.
- Directions and functionality mark on each switch.

EIJB-02

- Combination of cartop inspection and junction box with pre-wired system.
- This product is accomplished with Siren, battery back-up and Arrival gong as a default feature.
- Rocker Switch provided to control lamp in mantainance and normal mode.

EJB-02

- Elevator junction box for mid-way and cartop.
- Easy handling and installation.
- Standard product, always ready for dispatch.
- Certified component with proper functionality test.

ESS

- Elevator emeergency stop switch.
- Emergency mushroom type design with certified NC element.
- Compact design and easy for installation.
- Standard product, always ready for dispatch.

DOOR SENSOR

EDS

- Light Immunity >100000 LUX
- IP54 Rated
- Low Power Consumption
- Number of Infra Red Diodes :- 17 Diode Set.
- Comes with 4 mtr Cable and Power Supply Box
- Suitable for both Side Opening and Center Opening Doors
- Product is available in 94 & 154 crossed beam
- Detecting range is 4000mm.

EDS-SB

- Range 6 meter
- Supply Voltage 8 to 30 VDC
- Optical Range :- Infra Red 940 nM

OVERLOAD SENSOR

LM3D

- Automatic calibration using the wire rope diameter, no need for test weights.
- Universal rope clamps for all types of rope distribution.
- Suitable for 1:1, 2:1 & 4:1 roped installations.
- Quick and easy installation (5 mins.)
- Standard LMC sensor with 4000 KG capacity (P+Q).
- Reinforced LMC sensor with 7500 KG capacity (P+Q).

ILC2

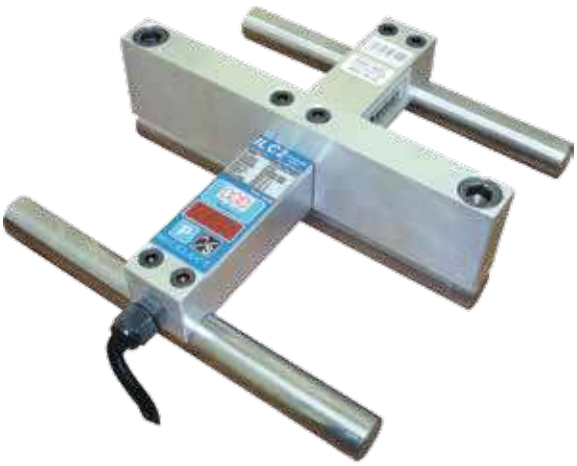

- Analogue output in mA (0-20, 0-24, 4-20).
- Automatic calibration using the wire rope diameter, no need for test weights.
- Universal rope clamps for all types of rope distribution.
- Quick and easy installation (5 mins.)
- Suitable for 1:1 rope installations.
- Standard LMC sensor with 4000 KG capacity (P+Q).
- Reinforced LMC sensor with 7500 KG capacity (P+Q).
- 2 programmable alarms: Full load & Overload
- Power supply voltage 24-48 Vdc
- Integrated display to show weight values up to 999 KG.

SWITCHES AND MAGNETS

ELS1

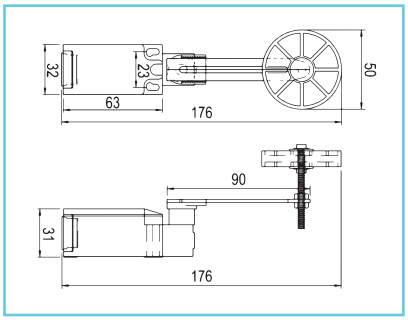

ELS2

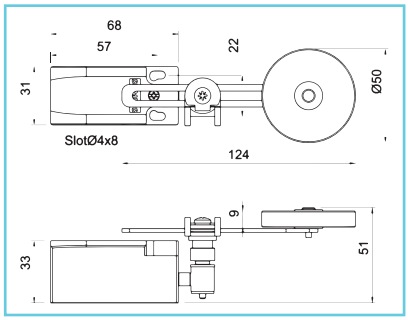

ELS-DC

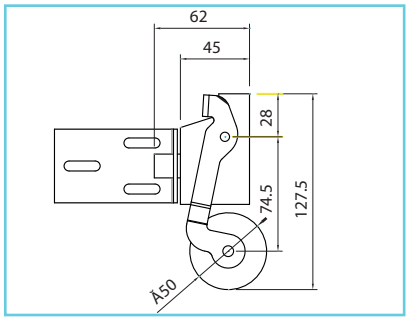

LIMIT SWITCH CAM

LMSB1

BIG

LMSB2

SMALL

LMSB3

ELSB1

SWITCHES

EOLS (OVERLOAD SWITCH)

- Elevator Overload Switch
- High Breaking capacity :- 15A
- Electrical Life :- 5 Lac operation min
- Mechanical Life :- 20 million cycles

FIREMAN SWITCH - EFMS

- Elevator fireman switch.
- Installation type :- Wall Grouting
- Standard product with standard feature.
- Suitable for all type of elevators control panel

PHOTO ELECTRIC SENSOR - EPES

- Optical sensor for door zone in high speed lift.
- Operating voltage :- 10 to 36 VDC
- Switch Element Function : - PNP Type.
- Available in complete set (Sensor, Fin, and Mounting Brackets)

ELECTRIC KEY SWITCH - EKS 1

- Electrical key switch for logic input to control board.
- Robust and fine design
- Smooth operation and long life
- contact current rating :- 3Amps

MICRO SWITCH

EMS1

- Contact rated current :- 15Amps At 250V AC.
- 20 operation per minute electrically.
- 240 operation per minute mechanically.
- RoHS complaint and UL approved.

EMS2

- Micro switch used for control signalling
- Contact rated current :- 15Amps at 250V AC.
- 5Lac operation electrically & 20 million mechanically.
- RoHS Compliant and UL approved.

REED SWITCH

ERD-NO-10-FLAT

ERD-NC-10-FLAT

ERD-NO

ERD-NC

BISTABLE SWITCH

EBSW

EBSW - 01

MAGNETS

EM1

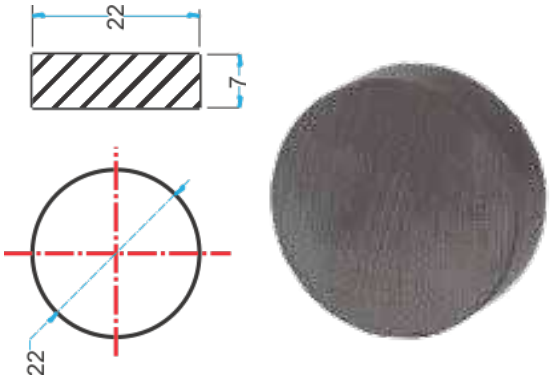

EM2

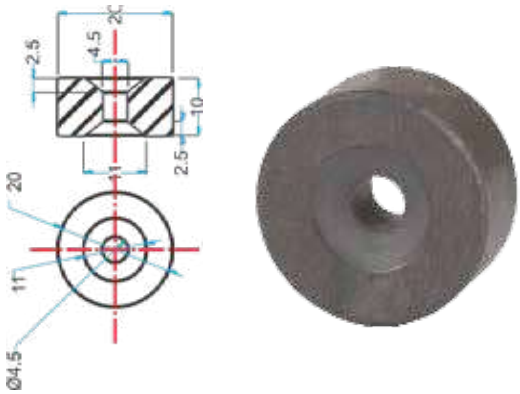

EM3

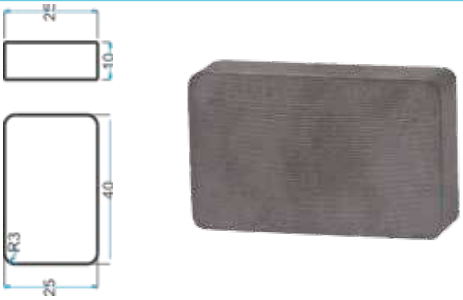

EM4 MAGNET STRIP

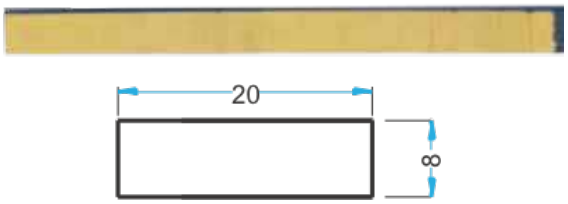

EM5

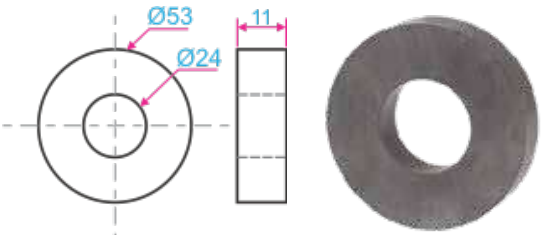

EM6

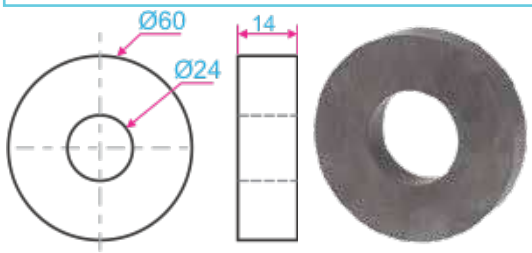

SWITCH GEARS

CONTACTOR

- Voltage Type-AC/DC
- Current ratings-12-110 Amps/ 3.7-55KW
- power pole contact composition - 3 NO
- Auxiliary contact composition - 1 NO + 1 NC
- Contactor Application - Motor Control
- Heat dissipation - 2...3 W at 50/60 Hz
- Mounting support Plate & Rail
- Operating time: 12...22 ms closing & 4...19 ms opening

MPCB

- Signalling circuit frequency - 25...400 Hz
- KW Rating- 0.06-15
- Component Type - Circuit Breaker
- Pole Description - 3P
- Control type - Push-button
- Thermal protection range adjustable

MCB

- No of Poles - 1, 2 & 3
- Current Rating- 1-63Amps
- Trip Unit Technology - Thermal - Magnetic
- Control Type - Toggle
- Mounting support : Rail

THERMAL OVERLOAD (LRD SERIES)

- Product compatibility - LC1D09,LC1D18,LC1D25,LC1D32,LC1D38
- Wide adjustable rage for thermal protection of motor.
- Contact Current Rating 13A
- Control type - Red push-button stop

REALYS

FINDER RELAY 60VDC

- Coil Voltage - 60V DC
- Supply Voltage - 250V AC, 10A
- 11 Plug In Pins
- Available with lockable test button, mechanical flag

FINDER RELAY 24VDC

- Supply Voltage - 250V AC/ 7A
- Coil Voltage - 24VDC
- Available with lockable test button, mechanical flag & LED indicator
- 14 Plug-In Pins

PHASE FAILURE

600SPP

- 3 phase, three wire input.
- Monitors Phase imbalance and Phase loss.
- Relay :- 250V AC (NO-5A/NC-3A)

600PSR

- 3 Phase , Three wire input.
- Monitor Phase sequence, Phase imbalance and Phase loss.
- Time Range - Power On Delay 200msec
- Realy : 250V AC (NO-5A/NC-3A)

TRANSFORMERS

TRF

- The core of transformer is welded as per German DIN standerd.
- Varnish is C.E[VDE] approved.
- Coil is vacuum impregnated & baked.
- VA-400/500/600
- Finger proof terminals
- Primary and secondary winding can be customized as per Customer requirement.

POWER SUPPLY

SMPS

- Output voltage : 24 V DC
- Rated input voltage : 100 to 120 VAC/200 to 240 VAC
- Mount type : Dinrail style
- Rated output current 4.5 A
- Make - Omron/Shavison/Meanwell

CONNECTORS

TERMINAL BLOCKS

- Elmex, Phoenix, Wego, Weidmuller, Connect Well.
- Rated Current(A) : 28-65A
- Sizes from 0.2 sq mm to 10 sq mm
- Rated Voltage (V) ; 800
- Wire Termination Technology : Brass Clamp

ECT-4

ECT-5

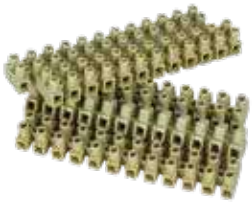

- Available in 12 way screw fitting
- Current capacity upto 10A
- Wire size compatibility :- 0.25 to 2.5sqmm
- Available in panel surface mount

CABLES & WIRES

TRVAELLING CABLE

- RoHS Compliant.
- Insulated with rubbarized PVC
- Rubbarized flat cbale with anti termide and anti rodent property

DISPLAY CABLE

- Flat ribbon cable for COP internal wiring.
- 12 core 0.25sqmm round cable for display wiring.
- 4 core 0.44sqmm twisted pair serial cable
- Flexible Round Cable.

MULTI CORE CABLE

- Copper conductor
- 2 core to 12 core, 0.5 & 4 sqmm cable range
- As per IP 694

SINGLE CORE CABLE

- Single core multi-stranded copper conductor
- FR PVC insulated wires with excellent flame retardant properties.
- As per IP 694

CABINET & ACCESSORIES

CODE	DESCRIPTION
CTRL-CAB-001	CONTROLLER CABINET_700L-500W-210H_POWDER COATED
CTRL-CAB-002	CONTROLLER CABINET_700L-600W-210H_POWDER COATED
CTRL-CAB-004	CONTROLLER CABINET_1000L-600W-250H_POWDER COATED
CTRL-CAB-007	CONTROLLER CABINET_1800L-400W-265H_POWDER COATED

DOOR LOCKS

ECL-1

ECL-2

DOOR KEYS

EKL-1

EKL-2

PVC TRUNKING

- Best suits for controller internal wiring.
- Available in variety of size as mention in the chart.
- Rigid PVC Trunking

PVC TRUNKING-SLOTED & NON-SLOTED	
CODE	DESCRIPTION
ETS45-25-2.9	TRUNKING_PVC_SLOTTED_45H X 25W_2.9M_GREY
ETS45-25	TRUNKING_PVC_SLOTTED_45H X 25W_2M_GREY
ETS45-45-2	TRUNKING_PVC_SLOTTED_45H X 45W_2M_GREY
ETS60-25-2	TRUNKING_PVC_SLOTTED_60H X 25W_2M_GREY
ETS60-25-2.9	TRUNKING_PVC_SLOTTED_60H X 25W_2.9M_GREY
ETU25-45-2.9	TRUNKING_PVC_UNSLOTTED_25H X 45W_2.9M_GREY
ETU45-45-2	TRUNKING_PVC_UNSLOTTED_45H X 45W_2M_GREY
ETU45-45-2.9	TRUNKING_PVC_UNSLOTTED_45H X 45W_2.9M_GREY
ET 30 X 25	TRUNKING_PVC_30H X 25W / M
ET 60 X 60	TRUNKING_PVC_60H X 60W / M

DINRAIL

ETS60-25-2

- Height 7.5 mm X Thickness 1.0 mm X Length 2mtr
- MS white zinc plated
- Slot at regular distance to mount on controller plate.

RECTIFIER

KPBC3510

- Product Dimensions 28 x 28 x 10mm (L x W x H)
- Rating (A) : 35A
- Mounting support : Surface Mount.

NEUTRAL LINK

EHL

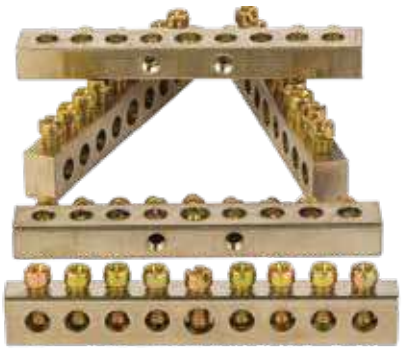

- Material Brass IS 319
- Size :L-70mm x W-7mm x H-10mm
- Panel Mount Provision.

CABLE GLANDS

EG-PVC-13.5-GR

- Body material - Polymide
- Gland thread - M20
- IP68 approved