Monarch BST

An Inovance Company

Elevator E-pacakge Solution

Ver.2021

Content

Part 1:Passenger Elevator E-pacakge Solution 02
New E-pacakge Solution 03
3rd Generation Control Cabinet--NICE3000 04
Tomorrow Control Cabinet--WISE3000 05
Slim Control Cabinet--H100 06
Cailing HMI Series--MBT-COP-A 07
Cailing HMI Series--BXGFM003/BXBDM001 08
Cailing HMI Series--KXG871 09
Cailing HMI Series--MBT-COP-B 10
Cailing HMI Series--BXGFM012/BXBFM008 11
Cailing HMI Series--BCKAM005 12
Cailing HMI Series--BXGFM022 13
Cailing HMI Series--BXGFM024 14
Zhiling HMI Series--MBT-COP-D 15
Zhiling HMI Series--BXG411/BBG411 16
Zhiling HMI Series--MBT-COP-G 17
Zhiling HMI Series--MBT-HOP-AB 18
Zhiling HMI Series--MBT-HOP-AC 19
Zhiling HMI Series--MBT-HOP-AM/AM01/AN/AN01 20
Xuanling HMI Series--MBT-COP-K 21
Xuanling HMI Series--BXGFM027 22
Xuanling HMI Series--BXGFS004 23
Disabled COP--MBT-COP-N 24
Disabled COP--MBT-COP-N08 25
Fire Switch LOP Series--MBT-FIRE-A/MBT-FIRE-B 26
Lock/Fire LOP Series--MBT-LOCK-A/MBT-FL-A 27
Hall Lantern Series--BFK212/BFG221/BFG371 28
IC Card Series 29
Power Box For Machine Room--MBT-MS-Y 30
Emergency Rescue Device--MCTC-ARD-C 31
Car top integrated inspection box--MCTC-CTW-B3 32
Shaft Inspection Box--MBT-PIB-A22/MBT-PSB-A12 33
Complete Set Of Cable 34
Electric Accessaries 35

Part 2: Home Lift E-pacakge Solution 36
HONOR Control Cabinet--NICE9000V 37
MINI Control Cabinet--NICE9000-V 38
Home HMI Series--MBT-COP-B29 39
Home HMI Series--MBT-COP-B39 40
Home HMI Series--BXG471 41
Home HMI Series--MBT-COP-R 42
Home HMI Series--BXG752 43
Home HMI Series--BCKCF006 44
Home HMI Series--BXGBS003 45
Main Machine--IVM E 46
Car Top Inspection Box-MCTC-CTW-A9 47
Magnetic Railing Ruler--MCTC-PES-L9 48
Shaft Inspection Box--MBT-PIB-A24 49
Homelift Complete Set Of Cable 50

Part 1:Passenger Elevator E-pacakge Solution

New E-pacakge Solution

Advantage

Industry leader

Meet new standard: UCMP;Door lock short circuit inspection;Door bypass function.
Meet EMC requirement（GB7588.1）

Simple Design

Reduce 30% cores in travelling cable.
Reduce 60% cable length from car top to Cabin.

Safety

All of power circuit in controller equipped with leakage protector.
No strong current circuit in COP for preventing
electric shock hazard.

Simple installation

D5G series displays can support automatic/semi-automatic
floor address setup,which can save much time of sebugging.
(Save 1 hour for 30 floors)

Rich fuctions

Integrated Cabin display, IC management, in
tercom,voice announcer,Lighting& Fan control,
floor control,etc..

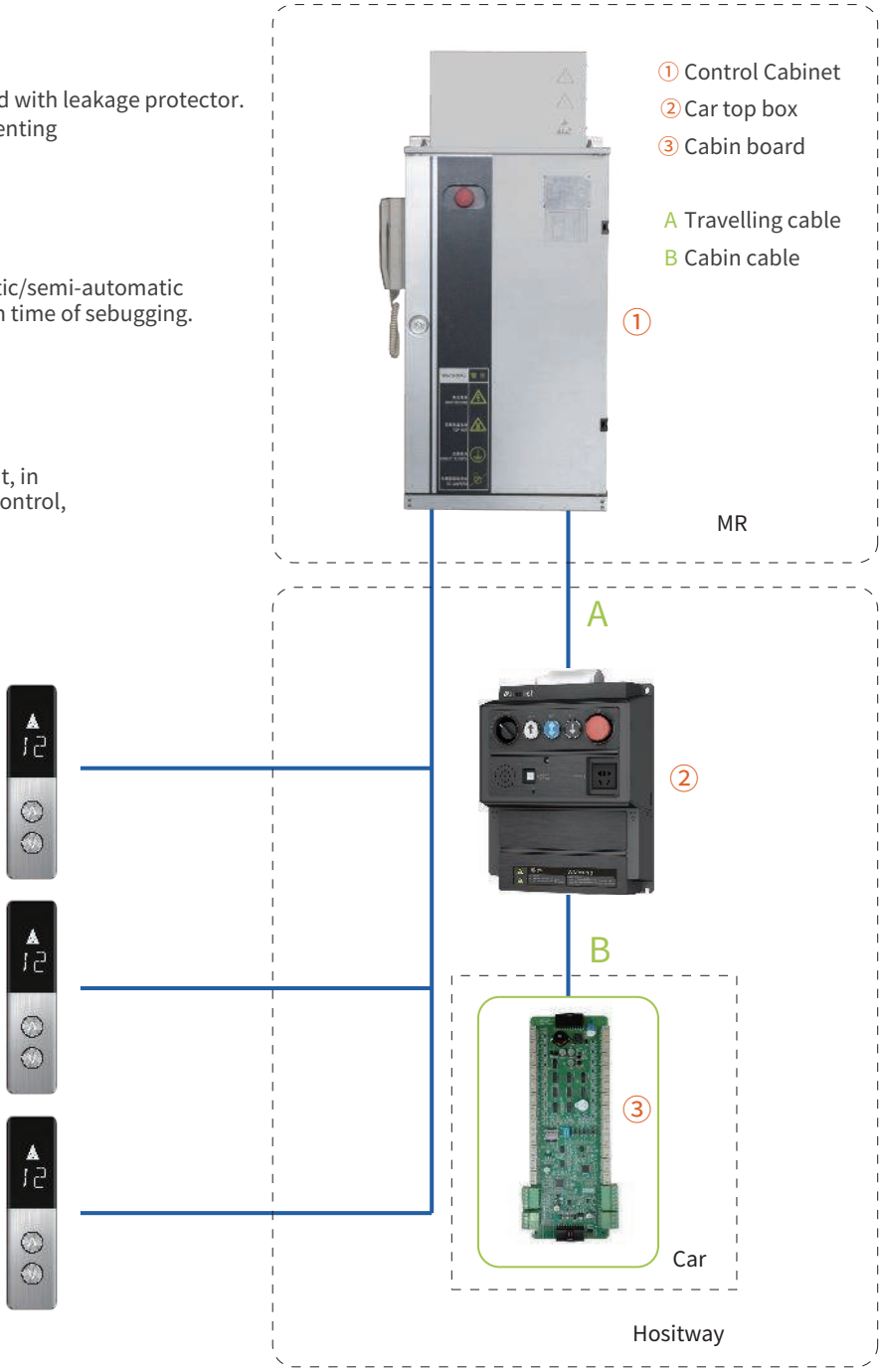

The 3rd Generation Control Cabinet--NICE3000

Product Features

More economical

Reduce 30% cores in travelling cable than regular type.
Cable only with 10 cores from car top to Cabin.
Reduce much cost on cable section.

Smaller

20% smaller than regular controller.

Safer

All of power circuit equipped with leakage protector（GB7588.1）

Meet new standard

UCMP;Door lock short circuit inspection;Door bypass function.
Reserve filter board position to meet electromagnetic compatibility requirement（GB7588.1）

Naming Rule

Voltage Degree

Cabinet Type　　Power Degree

NICE3000-B-40 15-A

NICE3000 Series Integrated Controller　　Machine Type

Machine Room

Machine Roomless

Product demension

Machine Room Control Cabinet Demension

Type	Demension(mm)	Installation type
5.5-15kw	970*430*220	Wall mounted/Ground mounted
18.5-22kw	1220*470*250	Ground mounted
30-37kw	1320*510*275	Ground mounted

Machine Roomless Control Cabinet Demension

Type	Demension(mm)
5.5-22kw	1350*350*240
30-37kw	1500*400*250

Tomorrow Control Cabinet--WISE3000

Product Features

High-performance

Performance of Drive chip increasing 150%;
Self-adaptive control, more stable operation;
High precision communication type encoder,
resolution of 1/8 million per turn, more accurate speed measurement.

Innovation

Flexible product mix, automated production line production and testing,
Greatly shorten the delivery time, reduce the product failure rate to PPM level.

Free debugging

Equipped with 23 bit communication absolute value encoder,
can realize the elevator debugging free;
No need to open the box debugging and import parameters in the factory,
save production time;Onsitedebugging is completed with one key,
greatly simplifying the installation and commissioning process and
reducing the commissioning travel expenses.

Safety

Using programmable electronic security system technology,
UCMP module can realize any short-connection detection of through door lock.
The life of the safety relay is extended 10 times, and the elevator operation is more safe and reliable.
Factory built - in electronic label, plate identity traceability,
improve the elevator safety supervision level.

Intelligent

Interactive mobile APP interface, remote expert guidance,
difficult diseases anytime and anywhere to solve;
Combined with AI technology, there is no need to touch the ladder,
the ladder is healthier and more intelligent;
Professional elevator operation data analysis,
real-time control of the internal parts of the elevator life cycle,
Improve the maintenance efficiency, reduce the probability of failure ladder stop,
more efficient operation and maintenance.

Product Size

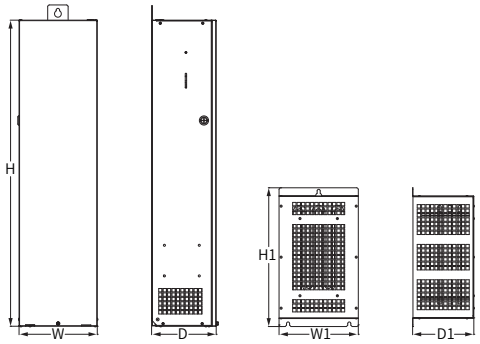

Size:MR Control Cabinet

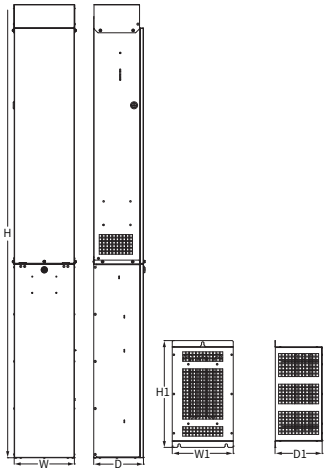

Size:MRL Control Cabinet

Product Parameter

Control Cabinet Type	Cabinet Size W×D×H (mm)	Resistance Box W1×D1×H1 (mm)	Power Rate	Controller Type	Installation Type
WISE3000-B-4008-B	230×190×900	230×180×408	8.3 kW	MR	Wall Mounted
WISE3000-B-4017-A	230×190×900	230×180×408	17 kW	MR	Wall Mounted
WISE3000-B-4017-B	230×190×900	230×180×408	17 kW	MR	Wall Mounted
WISE3000-W-4008-B	230×190×1730	230×180×408	8.3 kW	MRL	Flash Mounted
WISE3000-W-4017-B	230×190×1730	230×180×408	17 kW	MRL	Flash Mounted

Slim Control Cabinet--H100

Product Features

Subvert Tradition

Deep integration, slim design, 70% smaller than the traditional control cabinet.
Twin structure, break through limitations, meet a variety of installation requirements.

High Standard

Meet EN81-20/50
Meet GB 7588, ISO 8100

Outstanding performance

Mute control, operating noise ≤55dB
Integrated with ARD and Electric brake release
More innovation, people-oriented, more intelligent application
The use of the highest performance Huichuan platform, better control

Easy Operation

No debugging, elevator application is more simple
Intelligent design makes man-machine interaction more convenient
Easy operation and maintenance, effectively reduce labor costs
Inheriting the application experience of 2 million sets of systems, it is classic and stable

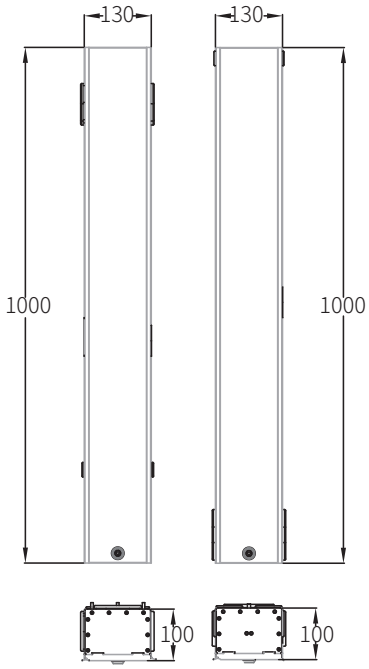

Product Parameter

Type	Rtaed Voltage	Rated Power	Rated Current	Brake Resistor
H100-2S2	Single Phase AC220V	2.2kW	10A	1100W 39Ω
H100-4T5	Three Phase AC380V	5.5kW	13A	1600W 100Ω

Related products

Cable Between Cabinets (Integrated Type)		MCTC-WCL-4005-P3	2m	For AC380V cabinet, to connect 2 cabinets Only for the up-down and left-right mounting
		MCTC-WCL-2002-P3	2m	For AC220V cabinet, to connect 2 cabinets Only for the up-down and left-right mounting
Cable Between Cabinets (Split Type)		MCTC-WCL-4005-P1	5m	For AC380V cabinet, to connect 2 cabinets Mainly for the Split type
		MCTC-WCL-2002-P1	5m	For AC220V cabinet, to connect 2 cabinets Mainly for the Split type

Resistance Box (Customers can make their own)	Type：MCTC-DBR4005-2m (AC380V) MCTC-DBR2002-2m (AC220V) Remark: 2M Cable(Standard)		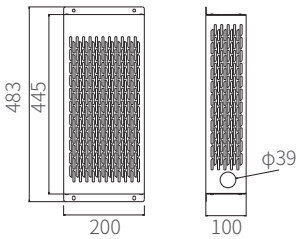
Battry Box (Customers can make their own)	Type：MCTC-PDB-N1 Remark: Battery Box for ARD and electric brake release 3M Cable(Standard)		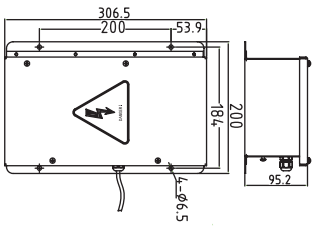

Cailing HMI Series--MBT-COP-A

Product Model — Configuration

MBT–COP–A–2–R600–F1–MA1707R–10

- MBT: Mobst
- COP: COP
- A: Serial No.
- 2: Inspection Type
- R600: Display Type
- F1: Panel Surface Finishing
- MA1707: Button Model
- R: Button Illumination
- 10: Stops

Configuration

Inspection Type	Display Type	Panel Surface Finishing	Button Model	Button Illumination
2: By inspection door	Dot-matrix:MCTC-HCB-R600 Segment LCD:MCTC-HCB-U671 MCTC-HCB-U673 Segment: MCTC-HCB-D631 True color LCD: MCTC-DCB-T647(Vertical)	F1:hairlined J1:Mirror TF1:Titanium Golden hairlined TJ1:Titanium Golden mirror	MA1707 MA1708 KA301 KA302	R:Red B:Blue W:White

MA1707
MA1708

KA301
KA302

Demension

Stops	Back box L2*W2*D	Panel L1*W1*3	IC Card
2~10	1180*157*77	1200*170*3	×
11~18	1340*157*77	1360*170*3	×
19~30	1540*157*77	1560*170*3	×
31~45	1540*187*77	1560*200*3	×
2~10	1180*157*77	1200*170*3	√
11~18	1340*157*77	1360*170*3	√
19~26	1540*157*77	1560*170*3	√
27~39	1540*187*77	1560*200*3	√

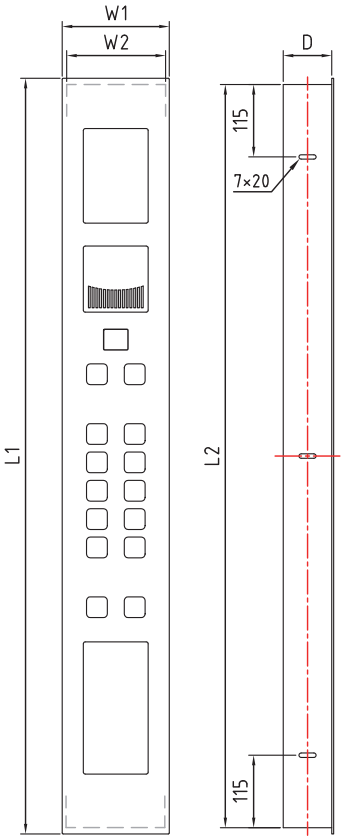

Cailing HMI Series--BXGFM003/BXBDM001

Product Model — Configuration

BXGFM003– M –D630–F1 –MA2J08W

- M: Specification
- D630: Display Model
- F1: Panel Surface Finishing
- MA2J08W: Button Model
  - W: Button Illumination

MA2J07/BAMSC007-D
MA2J08/BAMSC007-E
MA2J09/BAMSC007-F

BAMSS002-A
BAMSS002-B
BAMSS002-C

BXGFM003

- BST
- LOP
- Surface Mounted
- Serial Number

Simplex Elevator

3D combination with upper & lower hook locking

BXBDM001

- BST
- LOP
- Surface Mounted
- Serial Number

Duplex Elevator

3D combination of back screws

Product Size

Model	Box	Panel
BXGFM003	Nothing	340*90*15
BXBDM001	Nothing	340*165*15

Configuration

Specification and Code	Display Model	Panel surface finishing	Button Model	Button Illumination
Bottom single button up(-B)	MCTC-HCB-R600 Dot matrix	F1: Hairlined	MA2J07/BAMSC007-D	R:Red
Button single button up with lock			MA2J08/BAMSC007-E	
Middle double button	MCTC-HCB-D630 Segment	J1: Mirror	MA2J09/BAMSC007-F	
Middle double button with lock			BAMSS002-A	
Top single button down	MCTC-HCB-D634 Segment		BAMSS002-B	
Top single button down without lock			BAMSS002-C	

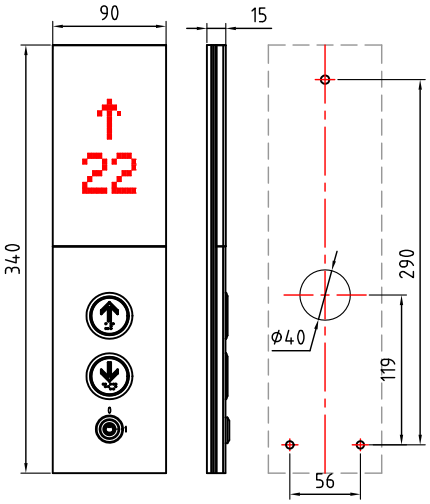

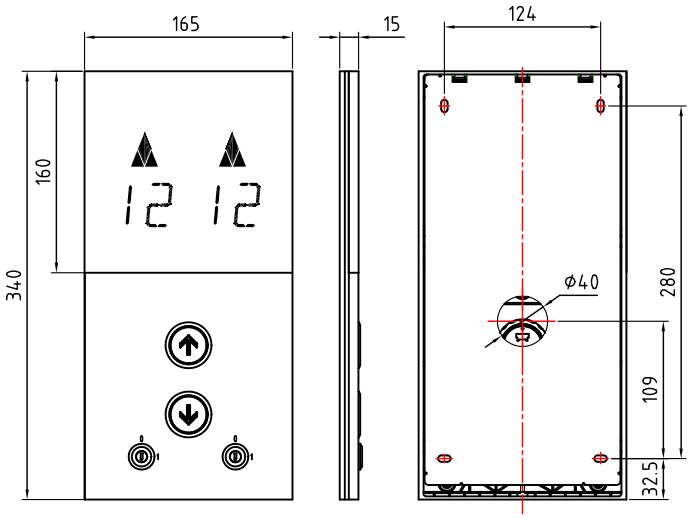

Cailing HMI Series--KXG871

Product Model

Configuration

KXG871–BS–D630–F2–MA1707R

Customer

Wall Mounted

LOP

Serial Number

Specification

Display Model

Panel Surface Finishing

Button Model

Button Illumination

Configuration

Specification and Code	Display Model	Panel surface finishing	Button Model	Button Illumination
Bottom single button up(-B)	MCTC-HCB-D630 Segment MCTC-HCB-D634 Segment	F2:Hairlined	MA1707 MA1708	R:Red
Button single button up with lock				
Middle double button				
Middle double button with lock				
Top single button down				
Top single button down without lock				

MA1707
MA1708

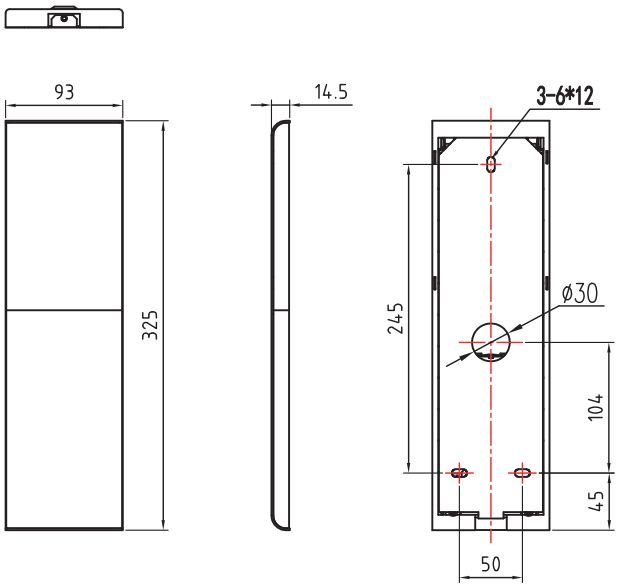

Product Size

Model	Box	Panel
KXG871	Nothing	325*93*14.5

Cailing HMI Series--MBT-COP-B

Product Model — Configuration

MBT–COP–B–2–R600–F1–MA1707R–10

- MBT: Mobst
- COP: Product Model
- B: Serial Number
- 2: Maintaince Type
- R600: Display Model
- F1: Panel Surface Finishing
- MA1707: Button Model
- R: Button Illumination
- 10: Stops

Configuration

Maintaince Type	Specification and Code	Panel surface finishing	Button Model	Button Illumination
2: Door maintaince	MCTC-HCB-R600 Dot matrix Segment: MCTC-HCB-U671 MCTC-HCB-U673 Segment: MCTC-HCB-D631 True color LCD: MCTC-DCB-T647 Vertical	F1:Hairlined J1: Mirror TF1:Tatinium hairlined TJ1:Tatinium mirror	MA1707 MA1708 KA301 KA302	R:Red B:Blue W:White

MA1707
MA1708

KA301
KA302

Product Size

Stops	Box L2*W2*77	Panel L1*W1*3	IC Card
2~10	1180*157*77	1230*170*3	×
11~18	1340*157*77	1390*170*3	×
19~30	1540*157*77	1590*170*3	×
31~45	1540*187*77	1590*200*3	×
2~10	1180*157*77	1230*170*3	√
11~18	1340*157*77	1390*170*3	√
19~26	1540*157*77	1590*170*3	√
27~39	1540*187*77	1590*200*3	√

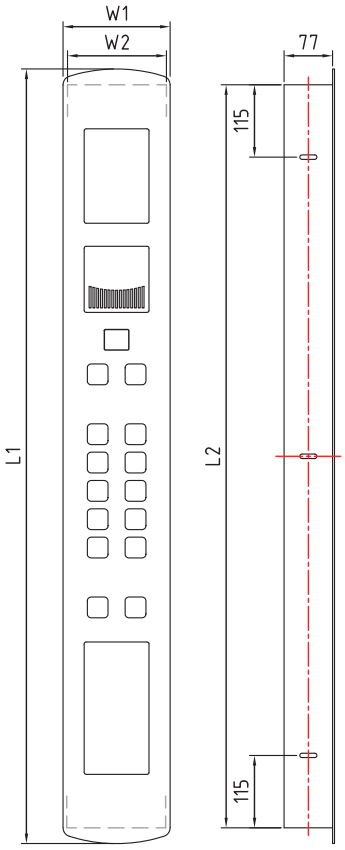

Cailing HMI Series--MXGFM012/BXBFM008

BXGFM012

BST
LOP
Surface Mounted
Serial Number

Simplex Elevator
3D combination with upper & lower hook locking

BXBFM008

BST
LOP
Surface Mounted
Serial Number

Duplex Elevator
3D combination with upper & lower hook locking

Product Model — Configuration

BXGFM012– M –D630–F2–MA1707R

Model — Display Model — Panel Surface Finishing — Button Model — Button Illumination

Configuration

Specification and Code	Display Model	Panel surface finishing	Button Model	Button Illumination
Bottom single button up(-B)	MCTC-HCB-R600 Segment MCTC-HCB-D630 Segment MCTC-HCB-D634 Segment	F2:Hairlined	MA1707 MA1708	R:Red
Button single button up with lock				
Middle double button				
Middle double button with lock				
Top single button down				
Top single button down without lock				

MA1707
MA1708

Product Size

Model	Box	Panel
BXGFM012	Nothing	335*90*12.5
BXBFM008	Nothing	335*165*12.5

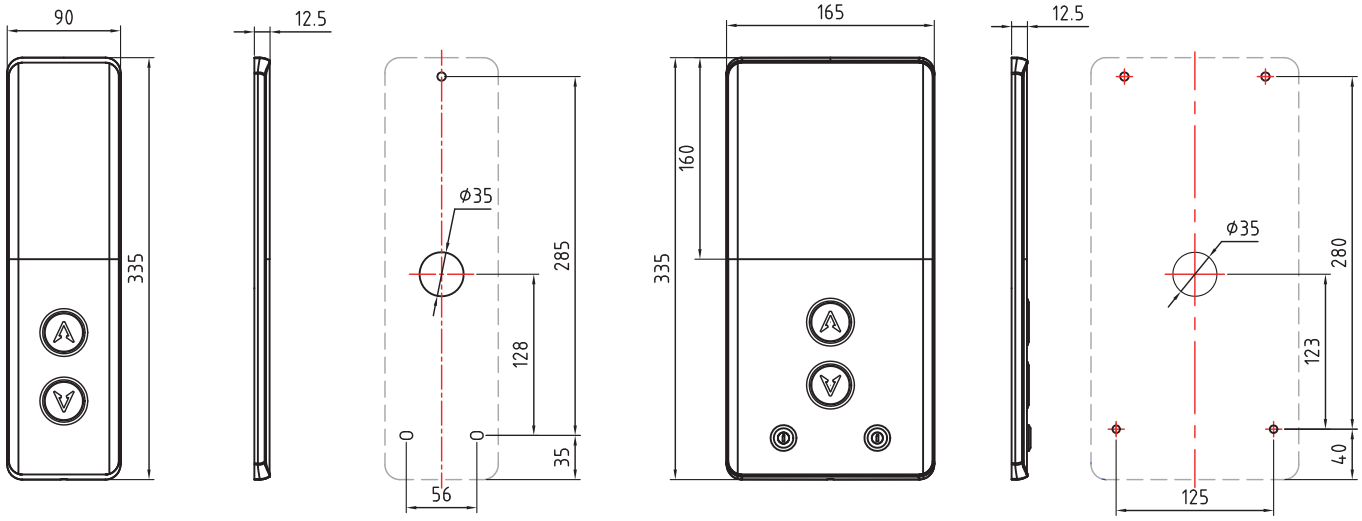

Cailing HMI Series--BCKAM005

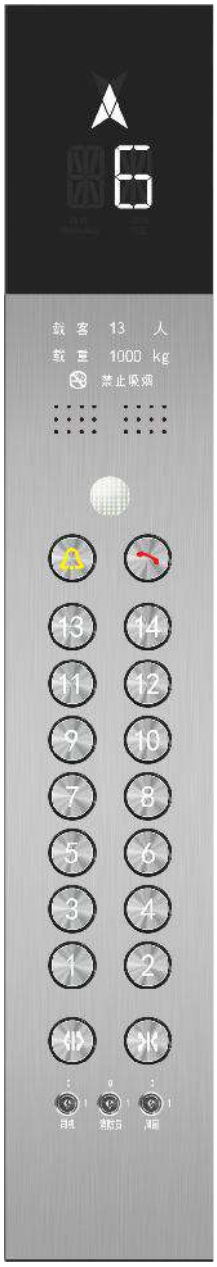

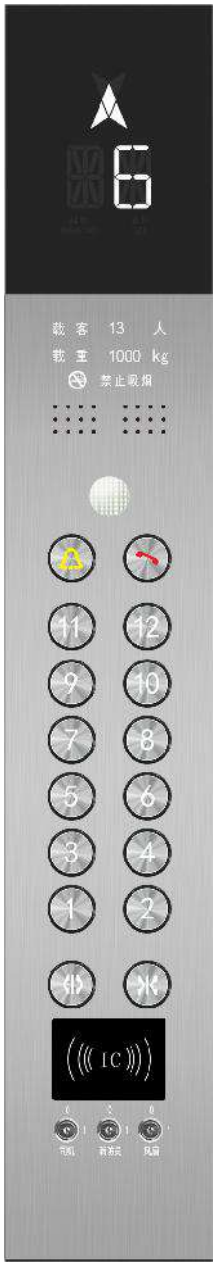

Product Model

Configuration

BCKAM005–1–D631–F1–MA1707R–10

BST

COP

Cut-out Type

Serial No.

Inspection Type

Display Type

Panel surface finishing

Button type

Button LED

Stops

Configuration

Inspection type	Display type	Panel surface finishing	Button type	Button LED
1:By lock	MCTC-HCB-D631 (Segment)	F2:Short hairlined J1: Mirror TF1:Titanium Golden hairlined TJ1:Titanium Golden mirror	MA1707 MA1708	Red Blue White

MA1707
MA1708

Demension

Stop	Back box L2*153*55	Panel L1*166*18	IC card
2~14	965*153*55	1000*166*18	×
15~30	1315*153*55	1350*166*18	×
2~12	965*153*55	1000*166*18	√
13~30	1315*153*55	1350*166*18	√

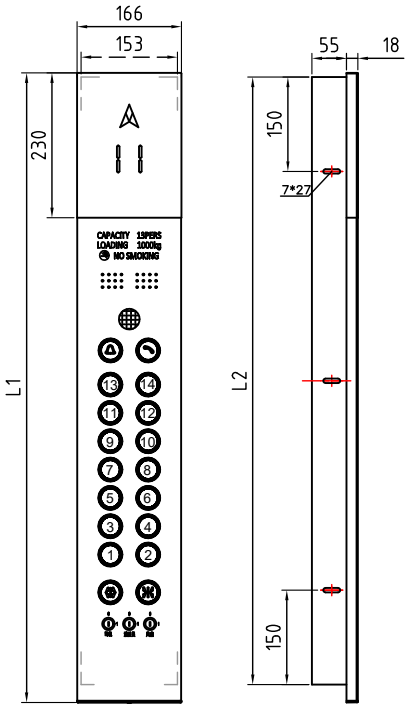

Cailing HMI Series--BXGFM022

Product Model — Configuration

BXGFM022–BS–D630–F2–MA1707R

- BXGFM022: Series No.
- BS: BST / LOP / Wall mounted
- D630: Specificaition
- F2: Panel surface finishin
- MA1707: Button type
- R: Button LED

Configuration

Specification and Code	Display Model	Panel surface finishing	Button Model	Button Illumination
Bottom single button up(-B)	MCTC-HCB-D630 Segment MCTC-HCB-D634 Segment	F2:Hairlined	MA1707 MA1708	R:Red
Button single button up with lock				
Middle double button				
Middle double button with lock				
Top single button down				
Top single button down without lock				

MA1707
MA1708

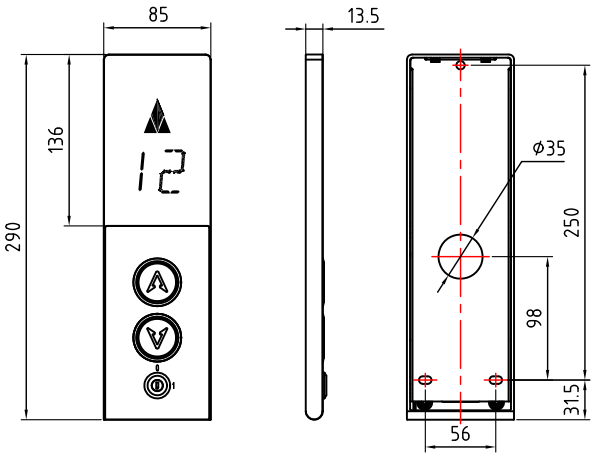

Demension

Type	Back Box	Panel
BXGFM022	No.	290*85*13. 5

Cailing HMI Series--BXGFM024

Product Model — Configuration

BXGFM024–BS–D630–F2–MA1707R

- BXGFM024: BST, Wall mounted, LOP, Series No.
- BS: Specificaition
- D630: Display type
- F2: Panel surface finishin
- MA1707: Button type
- R: Button LED

Configuration

Specification and Code	Display Model	Panel surface finishing	Button Model	Button Illumination
Bottom single button up(-B)	MCTC-HCB-D630 Segment MCTC-HCB-D634 Segment	F2:Hairlined	MA1707 MA1708	R:Red
Button single button up with lock				
Middle double button				
Middle double button with lock				
Top single button down				
Top single button down without lock				

MA1707
MA1708

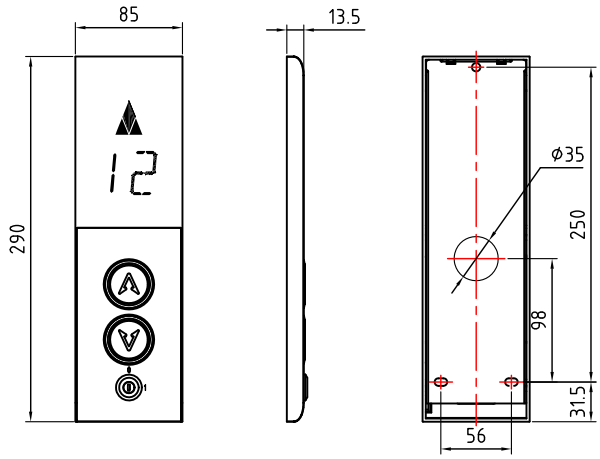

Demension

Type	Back Box	Panel
BXGFM024	NO	290*85*13. 5

Zhiling HMI Series--MBT-COP-D

Product Model — Configuration

MBT–COP–D–2–R600–F1–MA1001R–10

- MBT: Mobst
- COP: Series No.
- D: Inspection Type
- 2: Inspection Type
- R600: Display type
- F1: Panel surface finishin
- MA1001: Button type
- R: Button LED
- 10: Stop

Configuration

Inspection type	Display type	Panel surface finishing	Button type	Button LED
2:Door maintaince	Dot-matrix: MCTC-HCB-R600 Segment LCD: MCTC-HCB-U671 MCTC-HCB-U673 Segment: MCTC-HCB-D631 True color LCD: MCTC-DCB-T647 vertical	F2:Short hairlined J1: Mirror TF1:Titanium Golden hairlined TJ1:Titanium Golden mirror	MA1001 MA1002 KAS151 KAS158	Red Blue White

MA1001
MA1002

KAS151
KAS158

Demension

Stop	Back box L2*153*55	Panel L1*W1*3	IC card
2~10	1180*157*77	1200*185*3	×
11~18	1340*157*77	1360*185*3	×
19~28	1540*157*77	1560*185*3	×
29~42	1540*187*77	1560*215*3	×
2~10	1180*157*77	1200*185*3	√
11~16	1340*157*77	1360*185*3	√
17~26	1540*157*77	1560*185*3	√
27~39	1540*187*77	1560*215*3	√

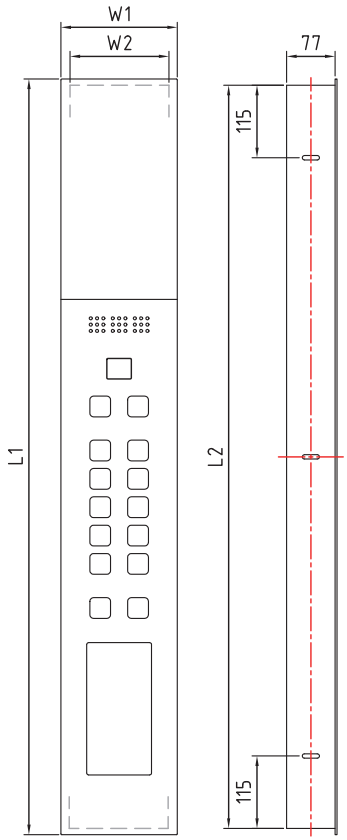

Zhiling HMI Series--BXG411/BBG411

BXG411

BST — Serial Number — Surface Mounted — Simplex Elevator

BBG411

BST — Serial Number — Surface Mounted — Duplex Elevator

Product Model — Configuration

BXG411–BS–R600–F1–MA1001 R

Specificaition — Display type — Panel surface finishing — Button type — Button LED

MA1001
MA1002

BAS241
BAS242

Product Size

Model	Box	Panel
BXG411	Nothing	340*90*15
BBG411	Nothing	340*165*15

Configuration

Specification and Code	Display Model	Panel surface finishing	Button Model	Button Illumination
Bottom single button up(-B) Button single button up with lock Middle double button Middle double button with lock Top single button down Top single button down without lock	MCTC-HCB-R600 Dot matrix MCTC-HCB-D673 Segment LCD MCTC-HCB-D630 MCTC-HCB-D634 Segment	F1：Hairlined J1：Mirror TF1:Tatinium hairlined TJ1:Tatinium mirror	MA1001 MA1002 BAS241 BAS242	R:Red B:Blue W:White

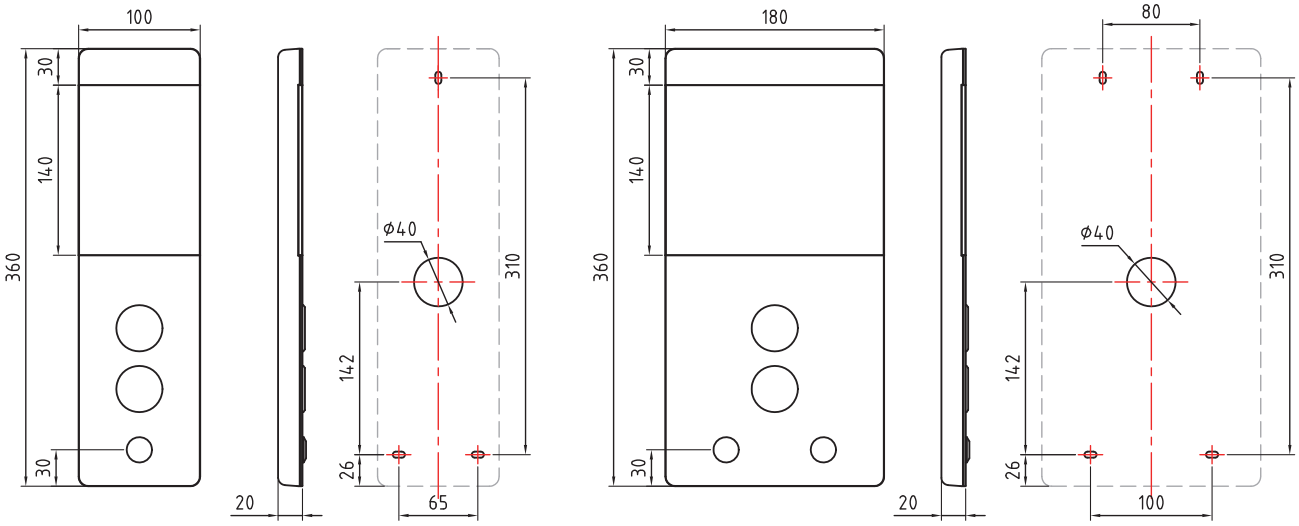

Zhiling HMI Series--MBT-COP-G

Product Model — Configuration

MBT–COP–G–2–R600–F3–MA1001R–10

- MBT: Mobst
- COP: Serial No.
- G: Serial No.
- 2: Maintaince type
- R600: Display model
- F3: Panel surface finishing
- MA1001R: Button type, Button LED
- 10: Stops

Configuration

Inspection type	Display type	Panel surface finishing	Button type	Button LED
2:Door maintaince	Dot-matrix: MCTC-HCB-R600 Segment LCD: MCTC-HCB-U671 MCTC-HCB-U673 Segment: MCTC-HCB-D631 True color LCD: MCTC-DCB-T647 vertical	F3:Middle hairlined, both side mirror f4:Middle mirror, both side hairlined	MA1001 MA1002 KAS151 KAS158	Red Blue White

MA1001
MA1002

KAS151
KAS158

Demension

Serial number	Stop	Back box L2*157*D	Panel L1*170*3	IC Card
G Serial	2~10	1180*157*77	1200*170*3	×
	11~18	1340*157*77	1360*170*3	×
	19~30	1540*157*77	1560*170*3	×
	2~10	1180*157*77	1200*170*3	√
	11~18	1340*157*7	1360*170*3	√
	19~26	1540*157*77	1560*170*3	√

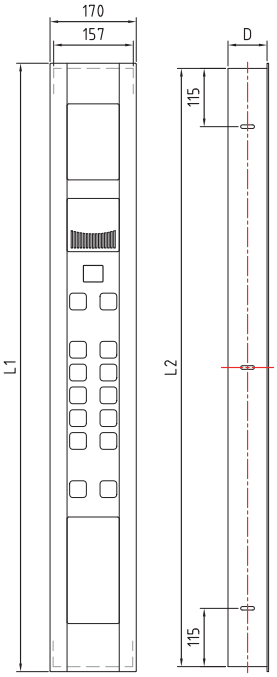

ZHILING Renovation series--MBT-HOP-AB

Product Model — Configuration

MBT–HOP–AB–BS–R600–F1–MA1001R

- MBT: Mobst
- HOP: COP
- AB: Serial No.
- BS: Maintaince type
- R600: Display model
- F1: Panel surface finishing
- MA1001: Button type
- R: Button LED

MA1001
MA1002

KAS151
KAS158

Configuration

Specification and Code	Display Model	Panel surface finishing	Button Model	Button Illumination
Bottom single button up(-B)	MCTC-HCB-R600 Dot matrix MCTC-HCB-D673 Segment LCD MCTC-HCB-D630 MCTC-HCB-D634 Segment	F1：Hairlined J1：Mirror	MA1001 MA1002 KAS151 KAS158	R:Red B:Blue W:White
Button single button up with lock				
Middle double button				
Middle double button with lock				
Top single button down				
Top single button down without lock				
Bottom sigle button with lock and maintaince				
Middle double button with lock and firefighter				
Top single button down with lock and firefighter				

Demension

Box L2*W2*D	Panel L1*W1*2	Firefighter
360*90*60	380*105*2	×
480*90*60	500*105*2	√

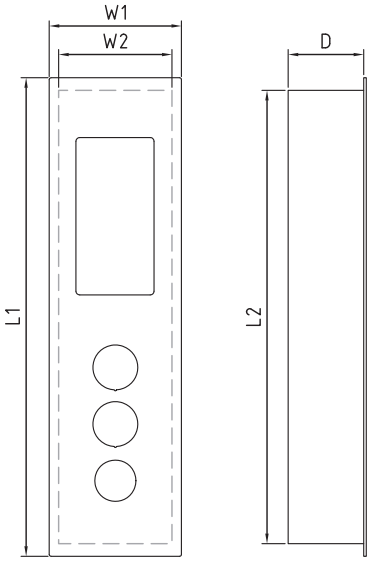

ZHILING RENOVATION--MBT-HOP-AC

Product Model — Configuration

MBT–HOP–AC–BSS–R600–F1–MA1001R

- MBT: Mobst
- HOP: LOP
- AC: Serial No.
- BSS: Maintaince type
- R600: Display model
- F1: Panel surface finishing
- MA1001: Button type
- R: Button LED

MA1001
MA1002

KAS151
KAS158

Configuration

Specification and Code	Display Model	Panel surface finishing	Button Model	Button Illumination
Bottom single button up(-B)	MCTC-HCB-R600 Dot matrix MCTC-HCB-D673 Segment LCD MCTC-HCB-D630 MCTC-HCB-D634 Segment	F1：Hairlined J1：Mirror	MA1001 MA1002 KAS151 KAS158	R:Red B:Blue W:White
Button single button up with lock				
Middle double button				
Middle double button with lock				
Top single button down				
Top single button down without lock				
Bottom sigle button with lock and maintaince				
Middle double button with lock and firefighter				
Top single button down with lock and firefighter				

Demension

Box L2*W2*D	Panel L1*W1*2	Firefighter
360*180*60	380*195*2	×
480*180*60	500*195*2	√

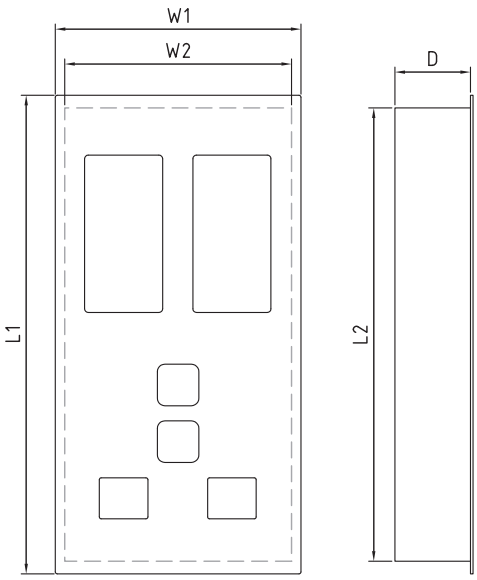

ZHILING RENOVATION--MBT-HOP-AM/AM01/AN/AN01

MBT—HOP—AM
MBT—HOP—AM01

MBT—HOP—AN
MBT—HOP—AN01

Product Model — Configuration

MBT—HOP—AM—BS—R600—F1—MA1001R

- MBT: Mobst
- HOP: LOP
- AM: Serial No.
- BS: Maintaince type
- R600: Display model
- F1: Panel surface finishing
- MA1001: Button type
- R: Button LED

MA1001
MA1002

KAS791
KAS792

Demension

Type	Box	Panel L1*W1*20	L2
MBT-HOP-AM	Nothing	430*120*20	370
MBT-HOP-AM01	Nothing	480*120*20	420
MBT-HOP-AN	Nothing	430*120*20	370
MBT-HOP-AN01	Nothing	480*120*20	420

Configuration

Specification and Code	Display Model	Panel surface finishing	Button Model	Button Illumination
Bottom single button up(-B)	MCTC-HCB-R600 Dot matrix MCTC-HCB-D673 Segment LCD MCTC-HCB-D630 MCTC-HCB-D634 Segment	F1: Hairlined J1: Mirror	MA1001 MA1002 KAS791 KAS792	R:Red B:Blue W:White
Button single button up with lock				
Middle double button				
Middle double button with lock				
Top single button down				
Top single button down without lock				

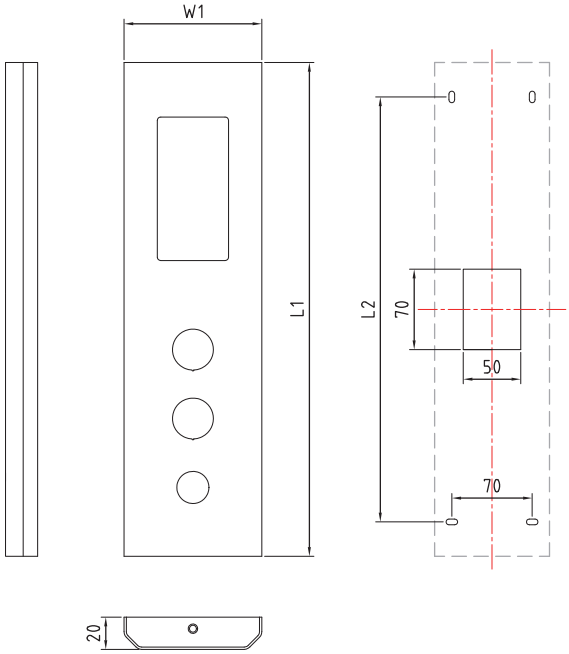

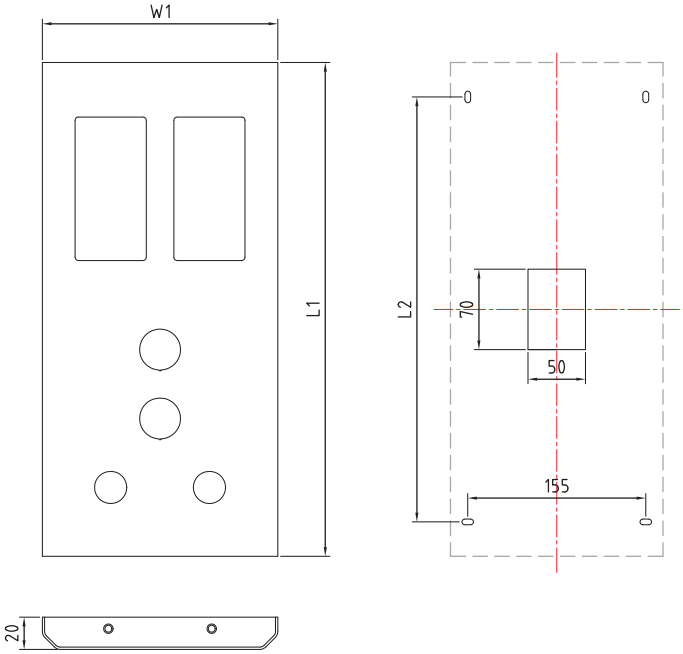

XUANLING HMI series--MBT-COP-K

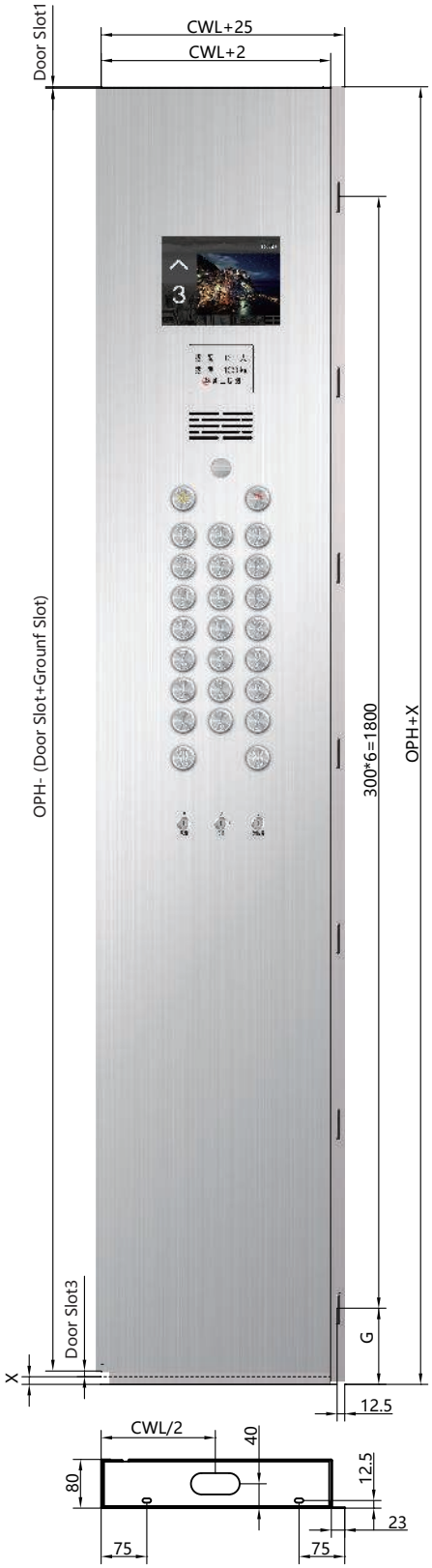

Product Model — Configuration

MBT–COP–K–1–T648–F1–MA1001R–10

- MBT: Mobst
- COP: Serial No.
- K: Maintaince type
- 1: Maintaince type
- T648: Display model
- F1: Panel surface finishing
- MA1001R: Button type
- 10: Button LED

Configuration

Inspection type	Display model	Panel surface finishing	Button type	Button LED
2:Lock maintaince	Dot-matrix: MCTC-HCB-R600 Segment: MCTC-HCB-D631 Segment LCD: MCTC-HCB-U671 True color LCD picture TFT: MCTC-DCB-T647 T648 T649 T64A True color LCD video TFT: MCTC-DCB-T618 M61A T64B T61C	F1:Hairlined J1:Mirror TF1:Tatinum hairlined TJ1:Tatinum mirror TJ2:Tatinum black mirror XJ1:Champaign gold mirror MJ1:Rose gold mirror	MA1001 MA1002 KAS151 KAS158	Blue Red White

Remark: Herizontal/vertical opitions for true color LCD TFT.

MA1001
MA1002

KAS151
KAS158

BAS661+Checklet

Demension

Code	Demension definition	Demension value
OPH	Opening height	2000/2100/2200
CWL	Front wall width	225/250/275/300/325/350/375/400/425/450
X	Reserve height of Decorative floor	0/3/20/25/30
G	First hole positioning dimension of side wall	120/150/200
	Opening direction	Right opening/ left opening(view from carbin to landing

Remark: Display option should be determined by width of front wall.
CWL>width of display+40.

XUANLING HMI series--BXGFM027

Product model — Configuration

BXGFM027–BS–D630–BAMFC017-A

- BST / LOP — Simplex Elevator Surface Mounted
- Series No. — 3D combination with upper and lower hook locking
- Specificaition — Display model — Button model

Configuration

Specification and Code	Display model	Panel surface finishing	Button model	Button illumination
Bottom single button up(-B) Button single button up with lock(-BS) Middle double button(-M) Middle double button with lock(-MS) Top single button down(-T) Top single button down without lock(-TS)	Segment: MCTC-HCB-D630 Segment: MCTC-HCB-D634 True color LCD: MCTC-HCB-T613	PC+Glass	BAMFC017-A BAMFC017-B BAMFC018-A BAMFC018-B	R:Red B:Blue W:White

Demension

Model	Box	Panel
BXGFM027	None	330*90*16

BAMFC017-A(Flat marking without braille)
BAMFC017-B(Flat marking with braille)

BAMFC018-A(Flat marking without braille)
BAMFC018-B(Flat marking with)

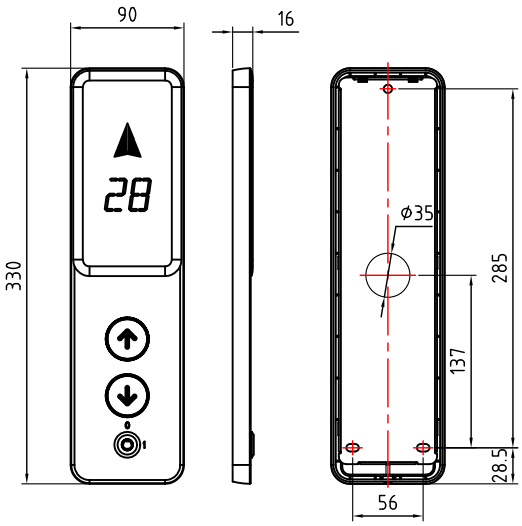

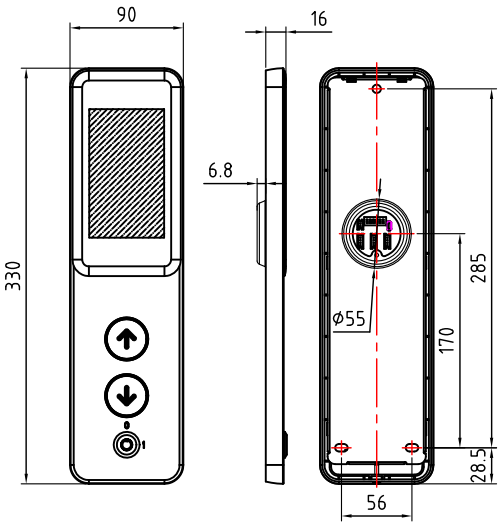

XUANLING HMI series--BXGFS004

Product model — Configuration

BXGFS004–BS–T613–F1–BAMSC007R

- BXGFS004: BST / LOP / Surface Mounted / Series No.
- BS: Specificaition
- T613: Display model
- F1: Panel surface finishing
- BAMSC007R: Button model / Button illumination

Configuration

Specificaition	Display model	Panel surface finishing	Button model	Button illumination
Bottom single button up(-B)	True color LCD: MCTC-HCB-T613	F1:Hairlined J1:Mirror TJ1:Tatinum mirror TF1:Tatinum hairlined TJ2:Tatinium black mirror	BAMSC007-A BAMSC007-B BAMSC007-C	R:Red B:Blue W:White
Button single button up with lock(-BS)				
Middle double button(-M)				
Middle double button with lock(-MS)				
Top single button down(-T)				
Top single button down without lock(-TS)				

BAMSC007-A(Flat marking without braille)
BAMSC007-B(Flat marking with braille)
BAMSC007-C(Protruded sysmbol with braille)

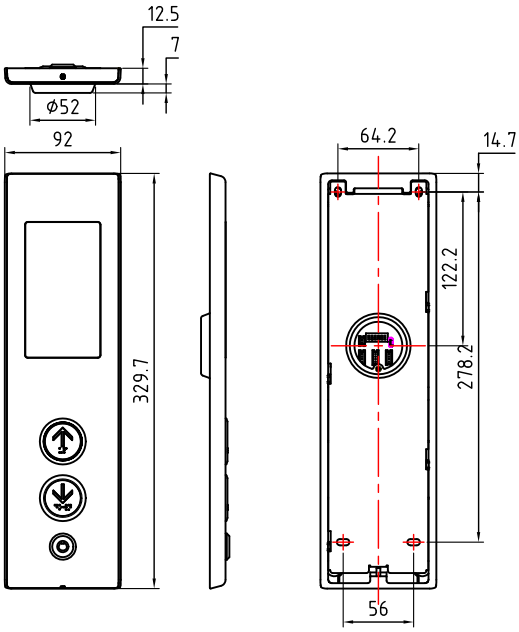

Demension

Model	Box	Panel
BXGFS004	None	329.7*92*12.5

Disabled COP--MBT-COP-N

MBT-COP-N

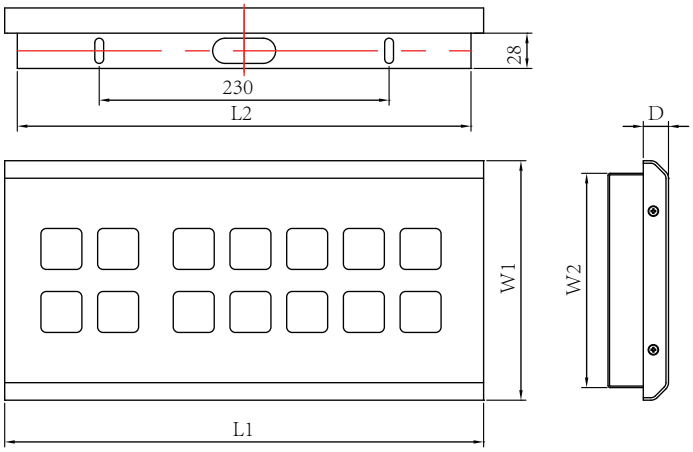

Product model — Configuration

MBT–COP–N–F1–KA302R–10

- MBT: Mobst
- COP: COP
- N: Serial NO.
- F1: Panel surface finishing
- KA302: Button Model
- R: Button illumination
- 10: Stops

MA1708
(Flat marking with braille)

KA302
(Flat marking with braille)

MA1002
(Flat marking with braille)

Configuration

Panel surface finishing	Button model	Button illumination
F1:Hairlined J1:Mirror TF1:Tatinium hairlined TJ1:Tatinium mirror	MA1708 KA302 MA1002	R:Red B:Blue W:White

Demension

Model	Stops	BoxL2*W2*28	PanelL1*W1*D	W3	W4
MBT-COP-N	2~10	360*170*28	380*190*20		
	11~24	360*270*28	380*290*20		
	25~36	360*370*28	380*390*20		
MBT-COP-N01	2~10	None	380*190*48	110	100
	11~24	None	380*290*48	210	200
	25~36	None	380*390*48	310	300

MBT-COP-N01

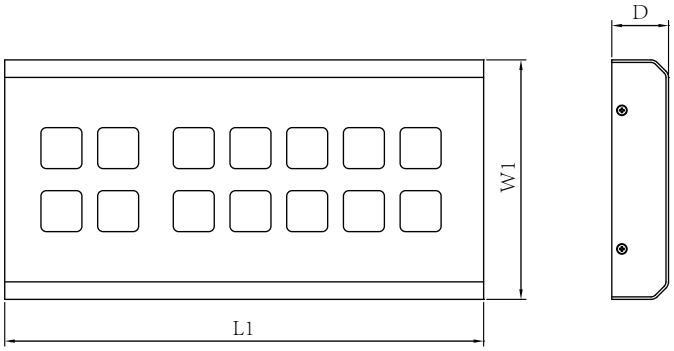

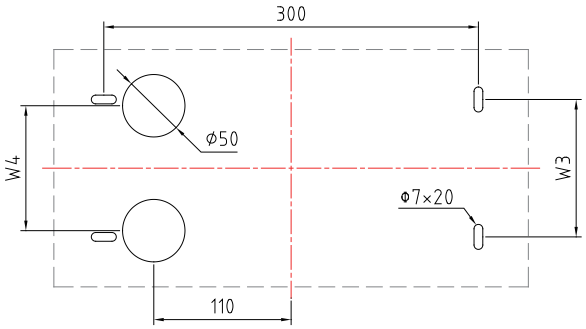

Disabled COP--MBT-COP-N08

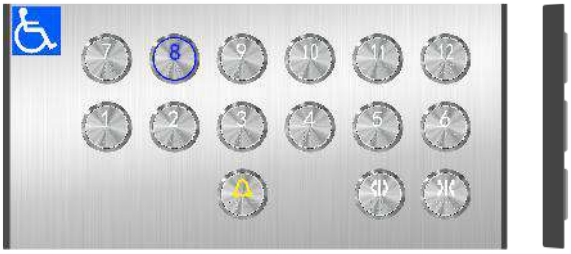

MBT–COP–N08

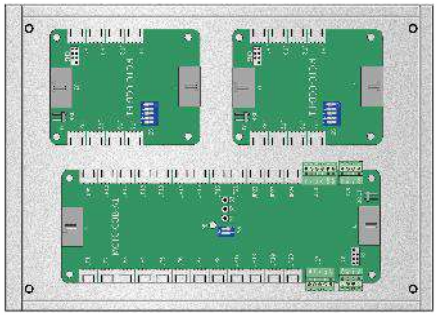

MBT–CCPB–B

Product model — Configuration

MBT–COP–N08–F1–MA2J08R–10

- MBT → MOBST
- COP → COP
- N08 → Serial NO.
- F1 → Panel surface finishing
- MA2J08 → Button model
- R → Button illumination
- 10 → Stops

MA2J08/BAMSC007-E(Flat marking with braille)
MA2J09/BAMSC007-F(Protruded sysmbol with braille)

BAMSS002-B(Flat marking with braille)
BAMSS002-C(Protruded sysmbol with braille)

Configuration

Panel surface finishing	Button model	Button illumination
F1:Hairlined J1:Mirror TF1:Tatinium hairlined TJ1:Tatinium mirror	MA2J08/BAMSC007-E MA2J09/BAMSC007-F BAMSS002-B BAMSS002-C	R:Red B:Blue W:White

Demension

Model		Stops	Box308*W*60	PanelL1*180*16
Disabled COP	MBT-COP-N08	2~12		370*180*16
		13~18		470*180*16
		19~30		620*180*16
Cabin Box	MBT-CCPB-B1	2~16	308*120*60	
	MBT-CCPB-B2	17~30	308*219*60	

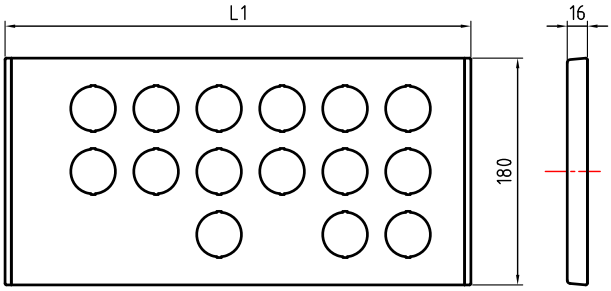

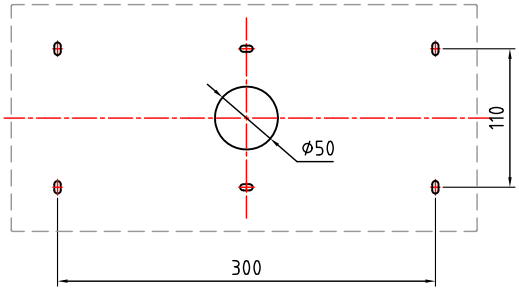

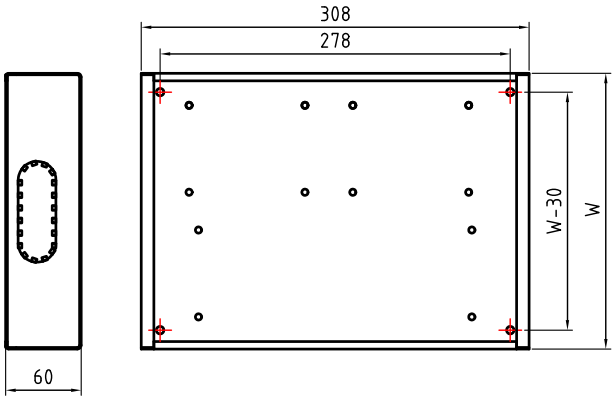

Fire Switch Series--MBT-FIRE-A/MBT-FIRE-B

Product model Configuration

MBT–FIRE–A–F1

Mobst Serial No.

Fire switch Panel surface finishing

Fire box configuration

Panel surface finishing
F1:Hairlined J1:mirror TF1:tatinium golden hairlined TJ1:tatinium golden mirror

Firebox dimension

Model	Box	Panel
MBT-FIRE-A	None	123*83*20
MBT-FIRE-B	140*65*60	150*80*2

MBT–FIRE–A

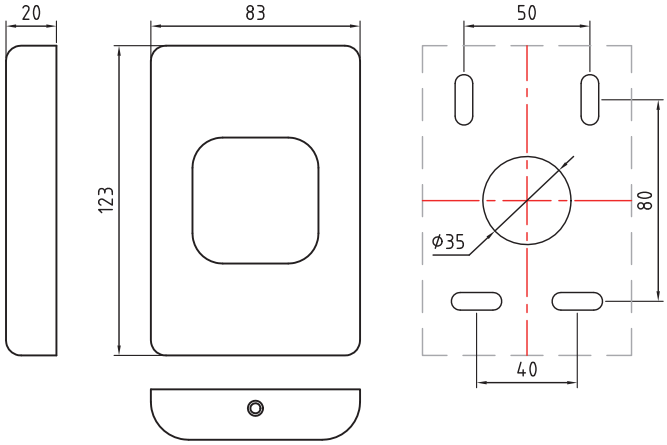

MBT–FIRE–B

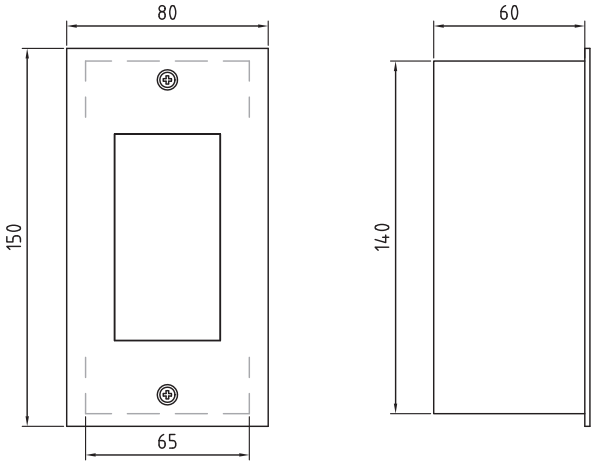

LOCK/FIRE SERIES--MBT-LOCK-A/MBT-FL-A

MBT–LOCK–A

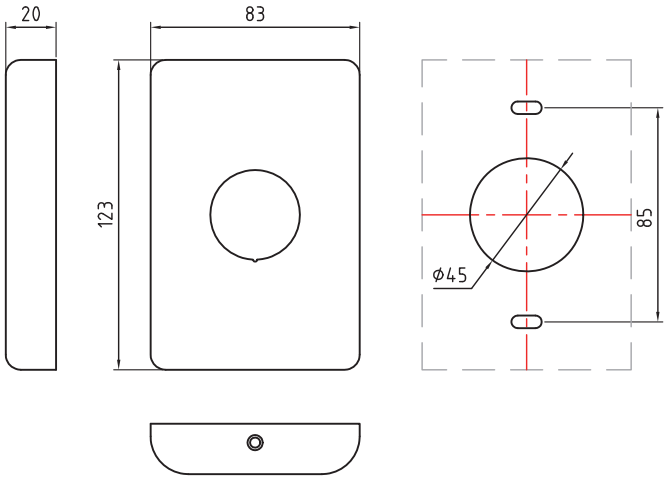

Model Vonfiguration

MBT–LOCK–A–F1

Mobst Serial

Elevator lock box Panel surface finishing

Elevator lock box configuration

Panel surface finish
F1:Hairline J1:Mirror TF1:Titanium gold hairline TJ1:Titanium gold mirror

Dimension of elevator lock box

Box	Panel
None	123*83*20

MBT–FL–A

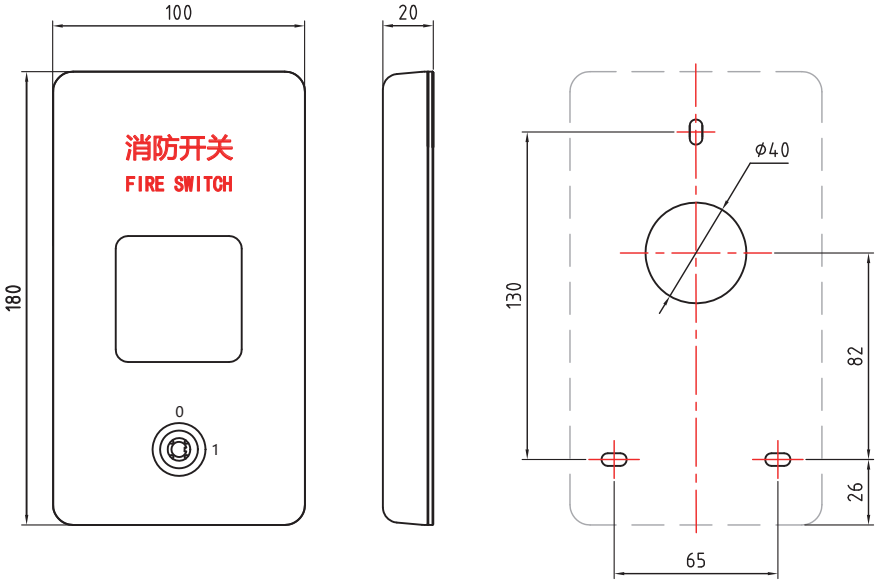

Model Configuration

MBT–FL–A–F1

Mobst Panel surface finishing

Fire box

Serial number

Elevator lock fire box configuration

Panel surface finishing
F1:hairlined J1:mirror TF1:titanium gold hairlined TJ1:titanium gold mirror

Dimension of fire box

Model	Box	Panel
MBT-FL-A	None	180*100*20

Hall lattern--BFK212/BFG221/BFG371

BFK212

Product model Configuration

BFK212–03–W–F1

BST
Hall lattern
Hole-digging
Serial number
Specification
Illumination color
Surface finish of front plate

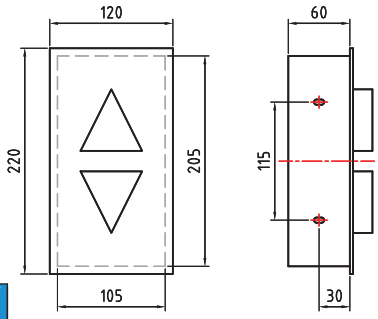

Product feature

Specification	Specification definition and abbreviation	Illumination color	Surface finish of front plate
01	UP (-B)	R:Red G:Green O:Orange B:Blue Y:Yellow W:White URDB:UP-red;DOWN-blue URDW:UP-red;DOWN-white UGDR:UP-green;DOWN-red	F1:Hairline J1:Mirror TF1:Titanium gold hairline TJ1:Titanium gold mirror
02	Middle floor(-M)		
03	DOWN (-T)		

BFG221

Product model Configuration

BFG221–03–W–F1

BST
Hall lattern
Wall-mounted
Series
Specification
Illumination color
Surface finish of front plate

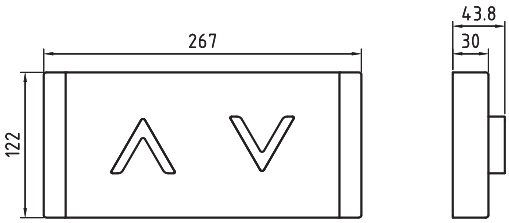

Product feature

Specification	Specification definition and abbreviation	Illumination color	Surface finish of front plate
01	UP (-B)	R:Red G:Green O:Orange B:Blue Y:Yellow W:White	F1:Hairline J1:Mirror TF1:Titanium gold hairline TJ1:Titanium gold mirror
02	Middle floor(-M)		
03	DOWN (-T)		

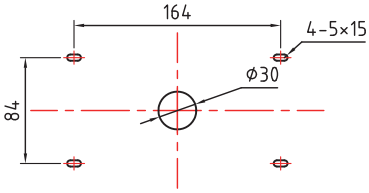

BFG371

Product model Configuration

BFG371–W

BST
Hall lattern
Wall-mounted
Series
Illumination color

Product feature

Illumination color
R:Red G:Green O:Orange B:Blue Y:Yellow W:White WW:Warm white UBDW:Up-blue and Down-white

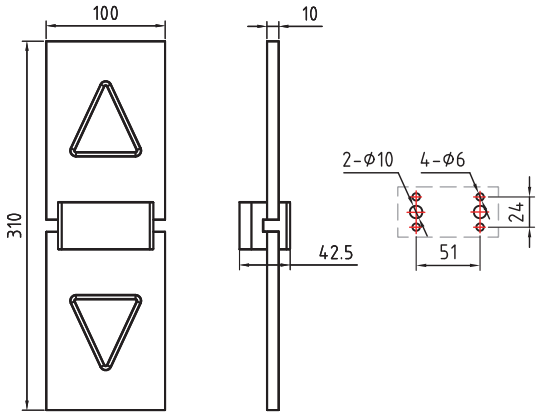

IC card series

product features

Brief

Integrated controller with card-reader; easy on-site installation and use; low cost

Safe

one password for one card：

prevent IC card from being copied;effectively protect user's rights and interests；

exclusively for encrypted lock：

Cards made by different encrypted locks cannot be shared for use,
avoiding the use of elevators by sharing IC cards of different residential complex

Meet new standards

满足TSG T7007-2016 电梯型式试验规则 、TSG T7001-2009 电梯监

In line with TSG T7007-2016 elevator modelling test regulations and
requirements of elevator supervision and routine inspection regulation (2nd resivion)

MCTC-IC-A/G
Integrated Controller

MCTC-IC-A2
Password Keyboard Controller

Product list

Content description	Product model	Function description
internal controlling device	MCTC-IC-A	integrated with MCTYC-ICA control board and MCTC-IC-G antenna board and structural component
internal controlling device with password keyboard	MCTC-IC-A2	can replace MCTC-IC-A with password keyboard
back door antenna for card swiping	MCTC-IC-G	for back door card-swiping in an through-door cabin
card machine for IC card	MCTC-IC-W	连接上位机，用于制作专用IC卡
IC	MCTC-IC-L	连接上位机，用于上位机软件加密
IC card	MCTC-IC-C	white card
	MCTC-IC-C2	key ring

Product dimension

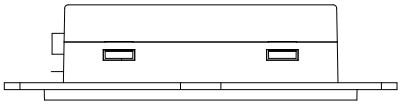

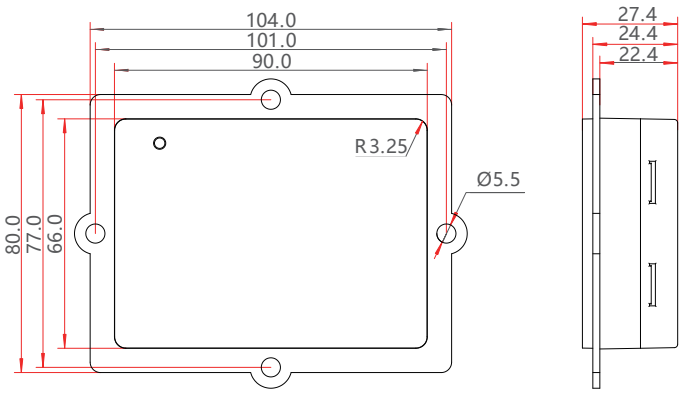

Machine room power box--MBT-MS-Y Series

Product feature

Seay on-site installation;there is installation dimension on the bottom
Easy on-site wiring; open-type design
High safety degree; overall fire-resistant ABS material
Beauiful and neat design overall; full symbols

product parameters

main parameters		
Overall dimension	254*218*104mm	main beaker TGBGZ-63 meet standards GB/T14048.2、IEC/EN60947-2 Analysis capability of rated short circuit：6kA Electric lifespan：10000 Mechanical lifespan：20000 Environment temperature：-35~+70℃ Comply with CCC、CE、RoHS
Shell material	fire-resistant ABS	
Way of installation	fixing by bolt	
Installation range	for machine-room elevator	
Rated working voltage	AC380V	
Rated insulation voltage	AC660V 50Hz	
IP level	IP30	
Rated current level	25A-125A	
Durability of rated short circuit	3kA	

Product dimension

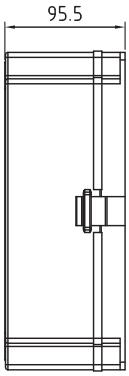

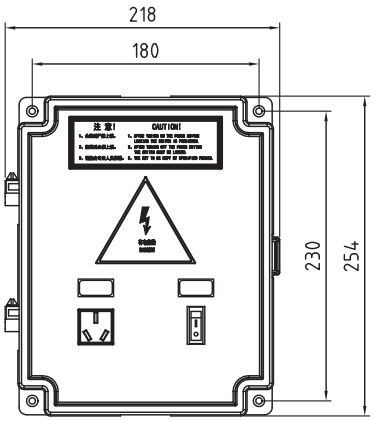

Emergency Rescue Device-MCTC-ARD-C

Product features

- Easier : ARD-C on MNK platform matches better with NICE series.
  Modular structure for easy maintenance.
- More reliable : Multiple protection for high reliability.
- more intelligent : Intelligent management of battery for high durability.
  Modular structure for easy maintenance.
  Accurate self-dianosis function; quicker pinpoint of breakdown.

ARD modelling test report

Naming rules

MCTC - ARD - C - 40 - 15

- MCTC: Optional components for elevator use
- ARD: Types of optional components
- C: Voltage level
- 40: Voltage level
- 15: Power level

Appearance dimension

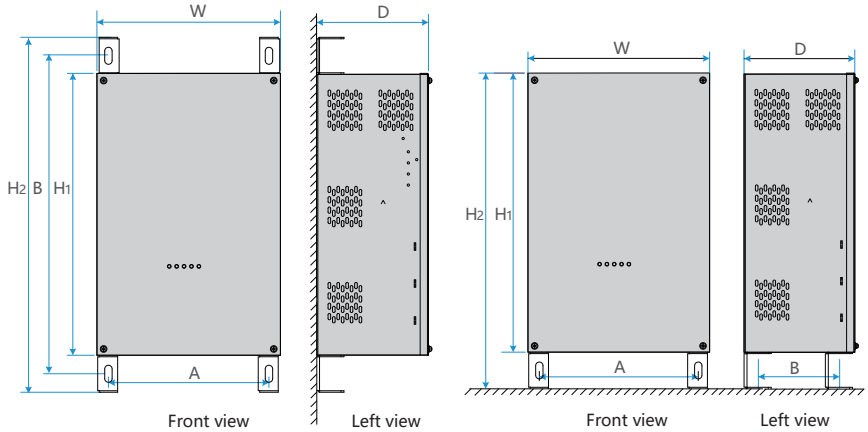

① Wall mounted ② Placed on ground

Product model	W (mm)	A (mm)	H1 (mm)	H2 (mm)	B (mm)	D (mm)	gross weight (kg)
Installed on the wall or place on the ground							
MCTC-ARD-C-4007	248.0	217.0	383.4	480.0	430.0	151.2	15
MCTC-ARD-C-4015							
MCTC-ARD-C-4030	303.0	272.0	383.4	480.0	430.0	151.2	17

Car Top Integrated Box--MCTC-CTW-B3

Product Description

轿顶一体箱集成了轿顶控制板、轿顶接口板、照明、应急电源、对讲、

The car top integrated box has combined components of car top control board, car top connector board, lighting, emergency power, intercom, socket, etc.
All external wiring uses prefabricated wire to plug to terminal.

Product Features

Fully integrated with all car top functions

集成对讲、照明、检修装置、轿顶控制、
Integrate all car top control functions such as intercom, lighting, inspection device,car top control and car operator control(optionl).

Strongly magnetic inspection handle

Good hand feeling; come in hand wasily;flexible

High-end HMI Interface

Display DI/DO state on black acrlic interface

Small in size

Highly integrated;ingenious design and easy for maintenance

Gorgeous Photography Lighing Design

Meet the function requirements of car top, inside box and emergency lighting.
Meet GB7588 & EN81-20.

Product Dimension

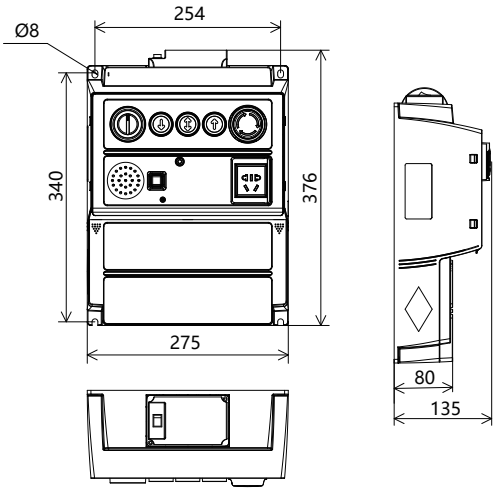

Drawing 3: installation diagram (mm)

Electric Box--MBT-PIB-A22/MBT-PSB-A12

Product description

底坑检修盒集成了急停开关、照明、对讲机，
Pit inspection box integrates emergency stop switch,lighting,
intercom and socket. All external wiring uses prefabricated wire to plug to terminal.

Product features

High safety degree,overall fire-resistant ABS material.

LED light bulb with protection cover,energy-saving and high protection.

Built-in installation for intercom,beautiful and anti-vandal.

Beauiful and neat design overall,full symbols.

Pit Inspection Box MBT-PIB-A22

Product Description

Pit emergency stop box integrates emergency stop switch and lighting switch，
use prefabricated cable plug with terminal

Highly waterproof; small in size and easy for installation

Product features

high safety degree; overall fire-resistant ABS material

lighting switch with waterproof hood; meet the requirements of IPX3

beauiful and neat design overall; full symbols

Pit Emergency Stop Box MBT-PSB-A12

Set of cables

Product features

Traveling cable 16+4
10-core cables are adopted in car top and cabin

RVV RVVP elevator round PVC control cable

TVVBP TVVBPG elevator flat PVC control cable

TVVBP

TVVBPG

Cable system

Easier wiring-full set of cables are prefabricated in strings in a plug-in way
richer application--cable modular and can autmatically have cable combinations according to customers' orders

Traveling cable clip——MBT-HWC-A3

Elevator Shaft Cable Module

Have professional certification of DNV(ISO9001)、CCC、UL、CE、RoHS,etc.

Machine room cable	Cabin cable	Shaft cable	Traveling cable
Power cable Motor cable Speed limit cable Speed limit action release cable Brake power cable Brake inspection cable Handwheel cable Parallel cable	Car operator cable Car door lock cable Safety gear cable Door zone cable Light curtain cable Car top intercom Cabin fan cable Cabin lighting cable Seighing switch cable	Elevator-calling cable Deceleration and limit cable Landing door cable Shaft safety cable Pit intercom cable Shaft lighting cable Pit safety cable Backup cable	Traveling cable Steel-core traveling cable Video traveling cable Steel-core video traveling cable

Electric auxiliaries

Optoelectronic switch MBT-L-A

Shaft safety switch MBT-HS-A1

Sin&cos encoder MBT-EC-A1

Asynchronous encoder MCT-EC-A

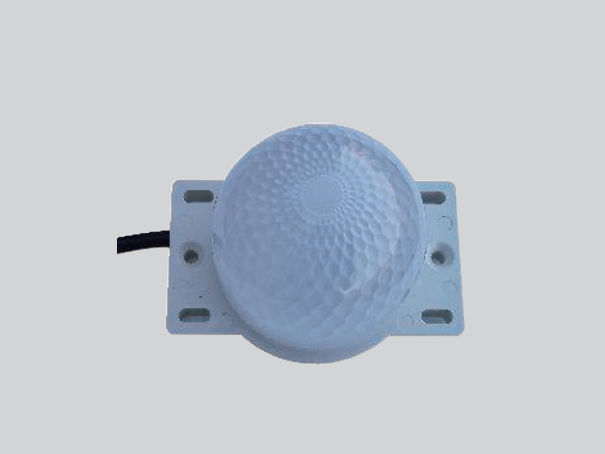

Shaft light MBT-HL-A10

Light & sound alarm RKL24/05F

Chapter Two electric package solution to home elevator

Honor cabinet--NICE9000V

Product feature

Delicate

Ultra-thin design and dual purpose.
Can be installed in an invisible manner, for a more neat and beautiful elevator.

Mute

With non-contact control tech meeting TUV and SIL3 certification.
Operation sound lower than 45dB for a quiet and peaceful home life.

Comfortable

Superb home elevator driving tech.
Fundamentally solve the problem for comfortable boarding experience.

Safe

With several anti-trapping solution for reassured boarding.

Dual purpose

Enabling two installation manners of inside shaft and outside cabinet

Integrated type:inside operation panel

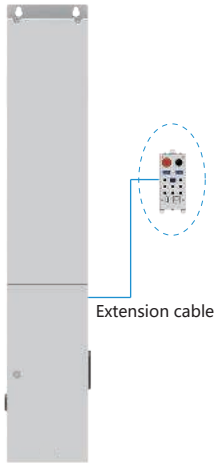

Split-type: separate from operation panel

Product dimension

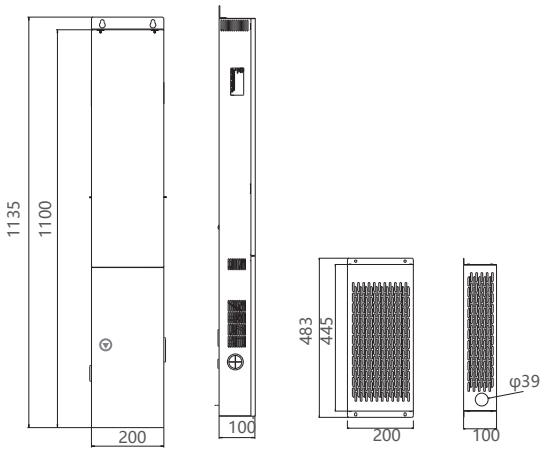

Configuration parameters

Control cabinet model	Rated voltage	Rated power	Rated current	IOT available
NICE9000V-4013-P	AC380V	5.5kw	13A	No
NICE9000V-4013-P-I	AC380V	5.5kw	13A	Yes
NICE9000V-2016-P	AC220V	3.7kw	16A	No
NICE9000V-2016-P-I	AC220V	3.7kw	16A	Yes

P.S.the length of operation box is 3m and model is MCTC-KHL-0030

MINI Cabinet--NICE9000-V

Product feature

- Highly integrated design; Only takes up 1/3 of the space of the traditional control cabinet.
  Cute and delicate design; Naturally fit with home decoration style.
- With non-contact control tech meeting TUV and SIL3 certification.
  Sound of control cabinet is lower than 40dB
- Driving platform of high performance; innovative algorithm.
  Fundamentally solve the problem for comfortable boarding experience.
- “5S”：Small、Silence、Save、Safe、Smart;
  Integrate multiple guarantees of intelligent automatic rescye,
  power-off automatic rescye and one-button rescue

Product dimension

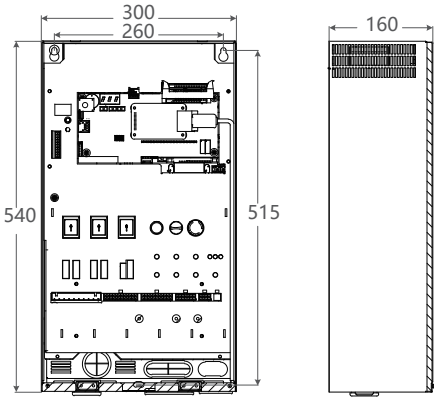

Configuraton parameters

Control cabinet model	Rated voltage	Rated power	Rated current	With IOT
NICE9000-V-2010-W	AC220V	1.1kw	10A	Yes
NICE9000-V-2010-W2	AC220V	1.1kw	10A	No

Home HMI series--MBT-COP-B29

Product Model — Configuration

MBT–COP–B29–1–U671–F1–MA1707R–3

- MBT: Mobst
- COP: COP
- B29: Serial
- 1: Maintenance Type
- U671: Display Board Model
- F1: PANEL Surface Finishing
- MA1707: Button Model
- R: Button Color
- 3: Stops

Configuration

Maintenance Type	Display Model	Panel surface finishing	Button Model	Button Color
Lock maintenance	Dot Matrix:MCTC-HCB-R600 Segment LCD:MCTC-HCB-U671 MCTC-HCB-U673 TFT true color LCD: MCTC-DCB-T647	F1:Hairline J1:Mirror TF1:Titanium gold hairline TJ1:Titanium gold mirror	MA1707 MA1708 MA1001 MA1002	R:Red O:Orange Y:Yellow G:Green B:Blue W:White

MA1707
MA1708

MA1001
MA1002

Dimension

Stops	Box	Front Panel
2~6	600*157*45	680*170*3

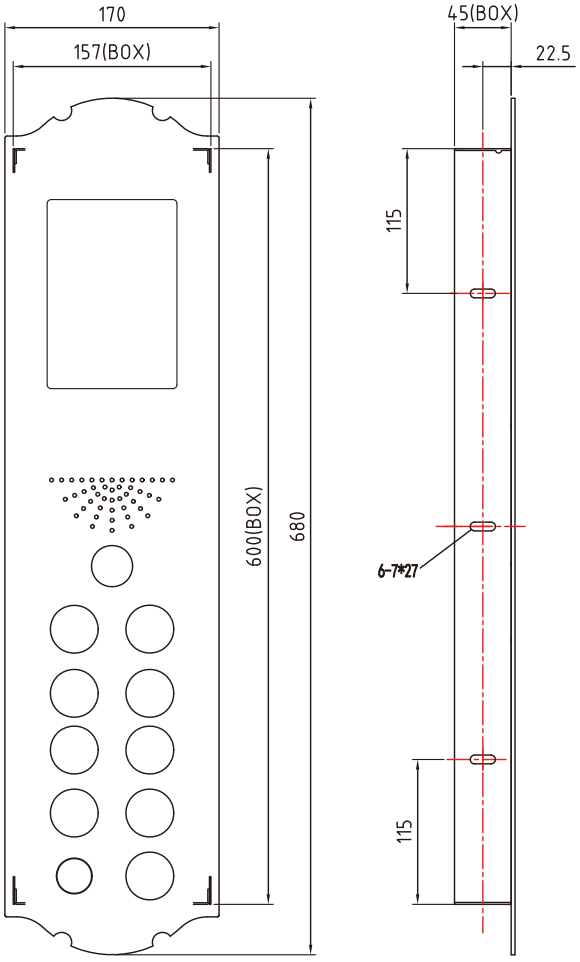

Home HMI series--MBT-COP-B39

Product Model — Configuration

MBT–COP–B39–1–U671–F1–MA1707R–3

- MBT: Mobst
- COP: COP
- B39: Serial
- 1: Maintenance Type
- U671: Display Board Model
- F1: Panel Surface Finishing
- MA1707: Button Model
- R: Button Color
- 3: Stops

Configuration

Maintenance Type	Display Model	Panel surface finishing	Button Model	Button Color
Lock maintenance	Dot Matrix:MCTC-HCB-R600 Segment LCD:MCTC-HCB-U671 MCTC-HCB-U673 TFT true color LCD: MCTC-DCB-T647	F1:Hairline J1:Mirror TF1:Titanium gold hairline TJ1:Titanium gold mirror	MA1707 MA1708 MA1001 MA1002	R:Red O:Orange Y:Yellow G:Green B:Blue WWhite

MA1707
MA1708

MA1001
MA1002

One-key Dailing Phone

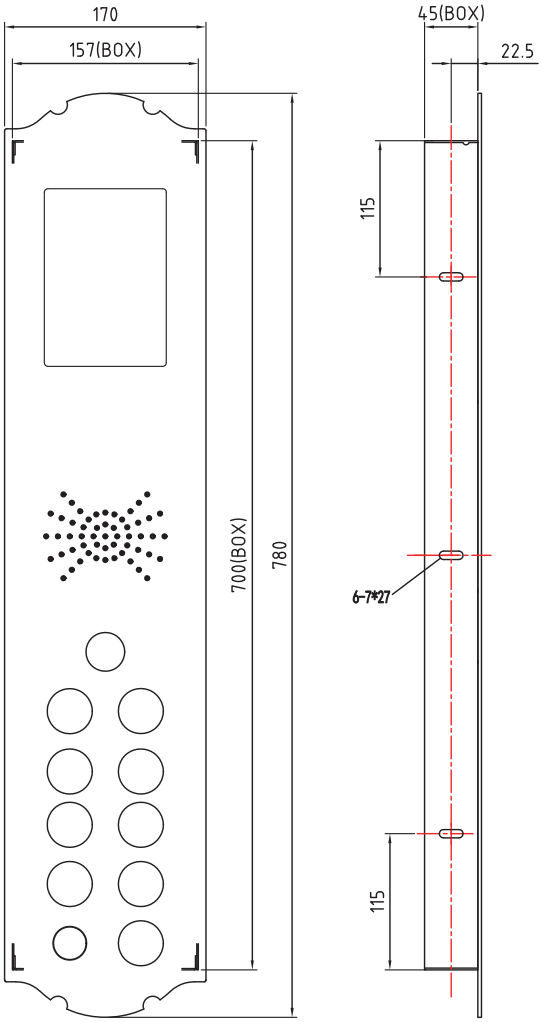

尺寸

Stops	Box	Front Panel
2~6	700*157*45	780*170*3

Home HMI series--BXG471

Product model — Configuration

BXG471 – M – D630 – F1 – MA2J07 R

- BXG471: BST
- M: Single display LOP
- BXG471: Wall mounted
- BXG471: series
- M – D630: Specification
- D630: Display model
- F1: Panel surface finishing
- MA2J07: Button model
- R: Button illumination

Configuration

Specification definition and abbreviation	Display model	Front panel surface finish	Button model	Button color
Bottom; single button;UP(-B)	Segment: MCTC-HCB-D630 Segment: MCTC-HCB-D634 Egment LCD: MCTC-HCB-U673	F1:hairline TF1:Titanium gols hairline	MA2J07 MA2J08 MA2J09 MA2K01 MA2K02 MA2K03	R:Red O:Orange Y:Yellow G:Green B:Blue W:White
Bottom;single buttonwith lock,UP(-BS)				
Middle floor;two buttons(-M)				
Middle floor;two buttons with lock(-MS)				
Top,single button, down(-T)				
Top floor,single button with lock(-TS)				

MA2J07/BAMSC007-A(Flat marking without braille)
MA2J08/BAMSC008-B(Flat marking with braille)
MA2J09/BAMSC009-C(Protruded marking with braille)

MA2K01(Flat marking without braille)
MA2K02(Flat marking with braille)
MA2K03(Protruded marking with braille)

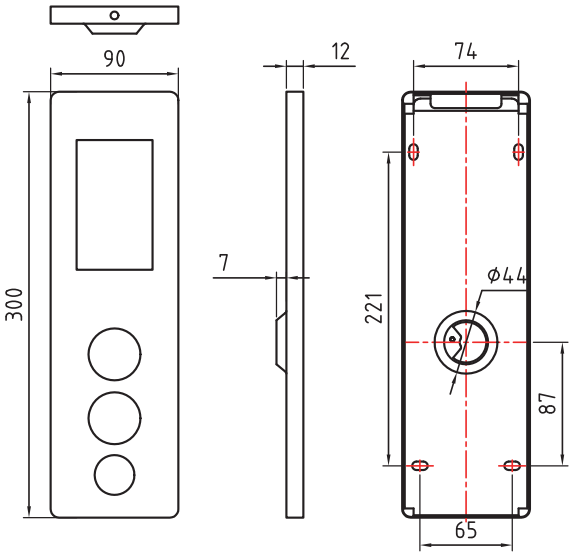

Dimension

model	box	front panel
BXG471	none	300*90*12

Home HMI series--MBT-COP-R

Product model — Configuration

MBT–COP–R–0–D630–F1–MA1001R–3

- MBT: Mobst
- COP: COP
- R: Serial
- 0: Maintenance type
- D630: Display mode
- F1: Panel surface finishing
- MA1001: Button model
- R: Button illumination
- 3: Stops

R01 (Vertical)

R (Horizontal)

MA1707
(Flat marking without braille)
MA1708
(flat marking with braille)

MA1001
(Flat marking without braille)
MA1002
(flat marking with braille)

Configuration

Maintenance type	Display model	Panel surface finishing	Button model	Vutton illumination
0:No maintenance	Dot matrix: MCTC-HCB-R600 Segment: MCTC-HCB-D630 MCTC-HCB-D634 Segment LCD: MCTC-HCB-U673	F1:hairline J1:mirror TJ1:titanium gold mirror TF1:titanium gold hairline TJ2:titanium black mirror	MA1707 MA1708 MA1001 MA1002	R:Red O:Orange Y:Yellow G:Green B:Blue W:White

尺寸

Stops	Box	Panel
2~6	366*246*60	380*260*3

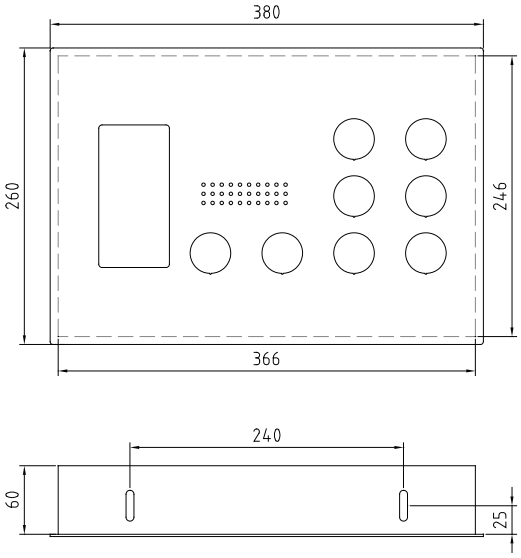

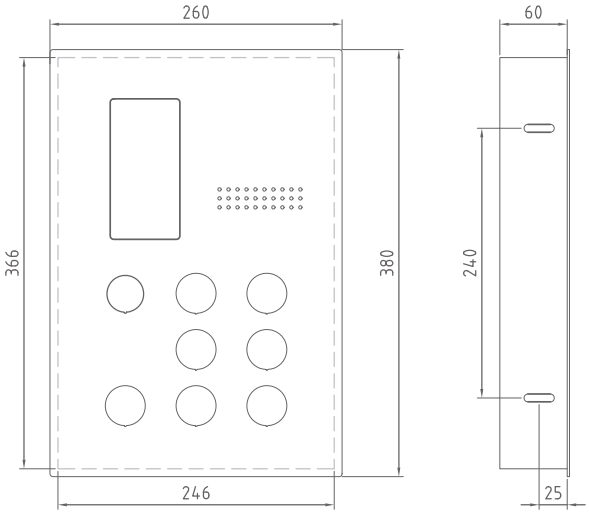

HOME HMI series--BXG752

Product characteristics

- Tempered glass panel
- 3.5' TFT true color display
- Integrated touch button
- A variety of optional for Arrow and button style
- ultrathin wall-mounted

Naming rule

BXG752-X (X from left to right:A、B、C、D、E、F)

A B C D E F

Product dimension

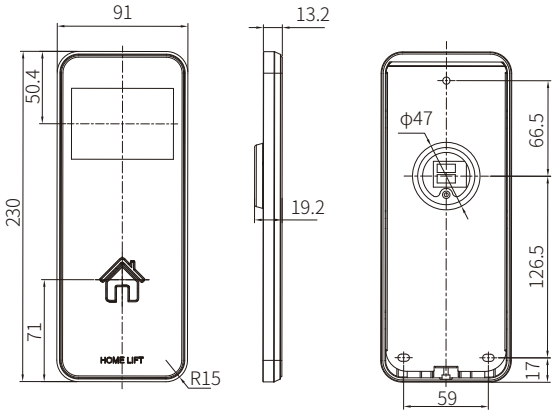

XUANLING HMI series--BCKCF006

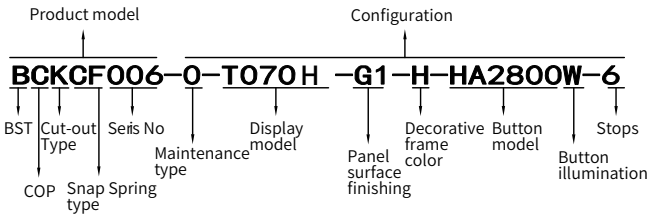

Configuration

Maintenance type	Display model	Panel surface finishing	Decorative frame color	Button model	Button illumination
0:No maintenance	True color LCD: MCTC-DCB-T070Herizontal MCTC-DCB-T070AHerizontal True color LCD: MCTC-HCB-T647Herizontal	G1:Black Tempered Glass G2:White Tempered Glass	H: Black oxide B: Natural Color oxide	HA2800	R:Red O:Orange Y:Yellow G:Green B:Blue W:White

HA2800

Dimension

Stops	Box	Panel
2~6	441*246*45	450*255*7. 5

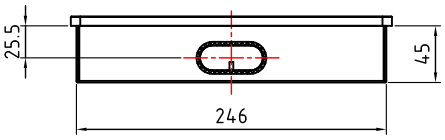

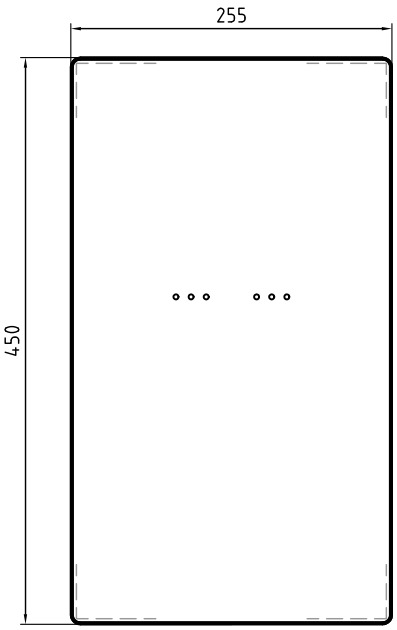

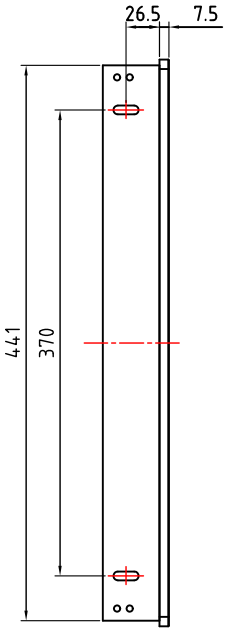

Home HMI series--BXGBS003

Product feature

- Ultrathin Surface mounted LOP
- Appearance dimension：110mm*110mm*15.5mm
- White LED display
- Glass panel
- Touch button

Dimension

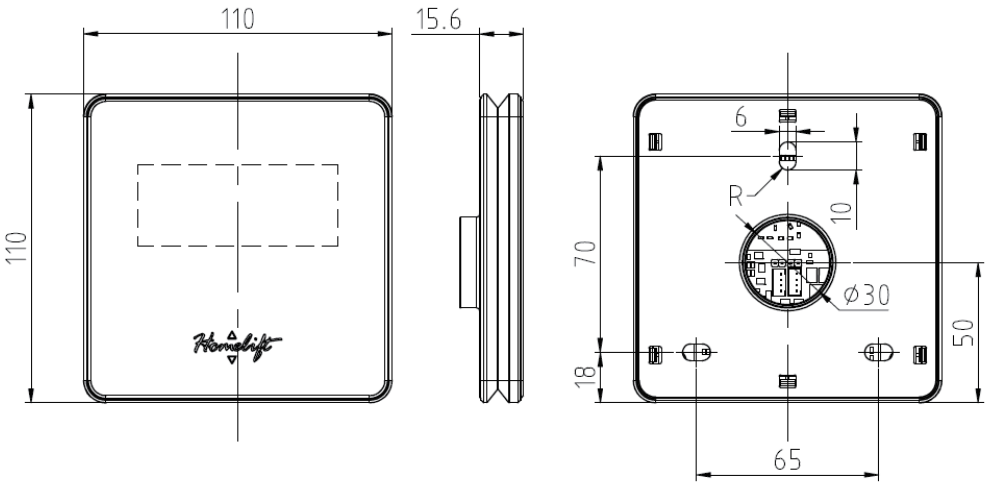

Main machine--IVM E

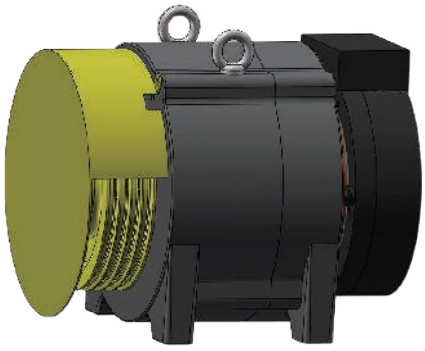

Product feature

- Complete machine accurate matching
- Free tuning,free debuging comfortable feeling

Naming rule

IVM 400 - 200E - 4 B

Symbol	Load
320	Load 320 kg
400	Load 400 kg
450	Load 450 kg

Symbol	Diameter of traction wheel
200E	200 mm
210E	210 mm

Symbol	Groove number
3	3 grooves
4	4 grooves

Symbol	Encoder cable length
	10m
B	20m
C	25m

Configuration parameter

Product model	Elevator parameter				Traction wheel specification			
	Load (kg)	Speed (m/s)	Recommend height (m)	Torque (Nm)	Diameter of traction wheel (mm)	Steel rope diameter (mm)	Slot number (pcs)	Slot spacing
IVM320-200E-3	320	0.40	≤25	105	200	8	3	12
IVM400-200E-3	400			134				
IVM450-200E-3	450			152				
IVM320-210E-3	320			110	210			
IVM400-210E-3	400			140				
IVM450-210E-3	450			160				
IVM320-200E-4	320			105	200		4	
IVM400-200E-4	400			134				
IVM450-200E-4	450			152				
IVM320-210E-4	320			110	210			
IVM400-210E-4	400			140				
IVM450-210E-4	450			160				

Product model	Motor parameter						Brake parameter		
	Power (kW)	Rated voltage (V)	Rated current (A)	Rated frequency (Hz)	Rated speed (rpm)	Number of pole pairs	Rated voltage (V)	Rated current (A)	Braking torque (Nm)
IVM320-200E-3	0.85	220/380	5.20	15.20	76	12	DC110	2X1.2	2X180
IVM400-200E-3	1.1		6.20						
IVM450-200E-3	1.2		7.20						
IVM320-210E-3	0.85		5.50	14.60	73				
IVM400-210E-3	1.1		6.50						
IVM450-210E-3	1.2		7.50						
IVM320-200E-4	0.85		5.20	15.20	64				
IVM400-200E-4	1.1		6.20						
IVM450-200E-4	1.2		7.20						
IVM320-210E-4	0.85		5.50	14.6	64				
IVM400-210E-4	1.1		6.50						
IVM450-210E-4	1.2		7.50						

Remark:P.S. The parameters of 3-grooved motor, with the same loading and traction wheel diameter, is exactly the same as all other parameters of 4-grooved motor.
Motors of AC220 have the same parameters with that of AC380

Product dimension

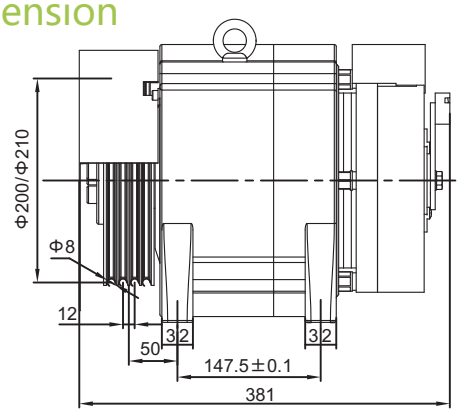

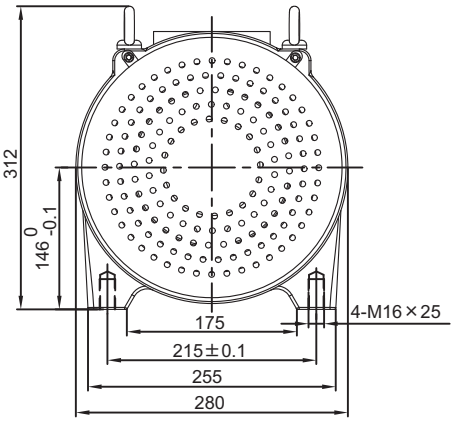

Car top inspection box--MCTC-CTW-A9

Product feature

- Small volume,ultrathin,More suitable for homelift
- It support automatic door and slidding door

Product model

MCTC-CTW-A9

Product dimension

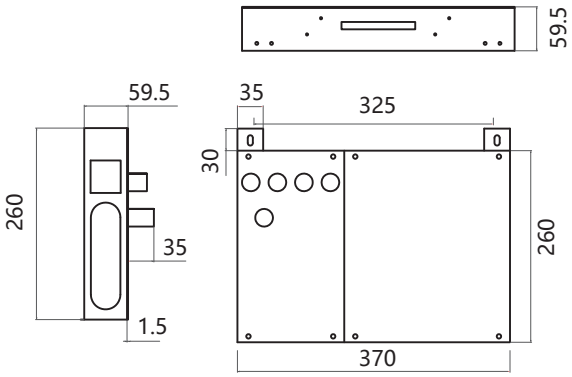

Performance

Small size

- Small size,slim case, thickness is only 60mm, more suitable for homelift.

Multi-function safety lamp

- Car top is lighted by safety voltage led stripe.
- Independent light for operate in inspection box.

Car top light,Fan controlled independently.

- Lighting,FAN is controlled by independent relay. It can be turned on or off from COP.So the COP can be free of mechnical swith and make the carbin wonderful.

Handhold door standard equipped

- Handhold door function standard equipped.
- Standard equipped with handhold relay,and the relay can be suitable for different handhold door.

Magnetic railing ruler--MCTC-PES-L9

Product feature

- Real-time accurate position and speed inspection measurement
- Absolute position,always correct floor
- More brief shaft
- National laberatory certification
- More reliable by double redundancy verify
- Self-learning with one click, simple debuging
- Protection level：IP54

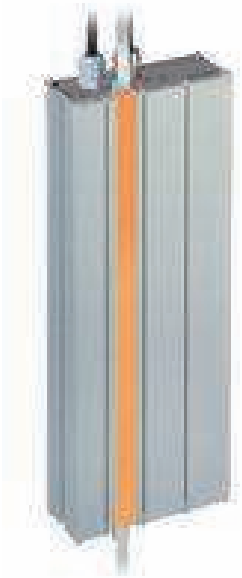

MCTC-PES-L9
Programmable elevator safety controller

Technical parameter

Name	Size and definition
Measuring scheme	Absolute
Measuring Length	≤ 260 m
Measuring speed	≤ 10米/s
Resolution	1000 μm = 1.00 mm
Repeated accracy	±1 mm
System accuracy under 20℃	±(1000 μm + 100 μm × L [m]) L = Measuring length, unit:M
Shell material	Alluminium
Weight	1200g (Without cable,cable：60g/m)
Working voltage	+ 24 VDC -20% / +10%
Voltage wave	< 100 mVpp
Current comsumption	≤ 0.2A @24V
Reverse voltage protection	Existed
Communication protocal	CANopen (DS406)
Stock temperature	-25℃~+85℃
Working temperature	-20℃~+65℃
Maximum humidity	95% incondensable
Protection degree	IP54(EN 60529)
Lifespan	20 years
Relay working time	<55ms

Connector specification

Connector	Connector type	Signal	Meaning	Color	Declaration
PIO Cable	Power connector	24V	24V positive port	Brown	External 24 V power supply
		GND	24V negative port	White	
	CAN communicate connector	CAN-H	CAN1 H wire	Yellow	Communicate with controller by CAN
		CAN-L	CAN1 L wire	Grew	
SCA Cable	Shielded wire	SHLD	Shielded wire	Blank	
	Safety relay output	SR-I	SR Leading end input	White	Safety relay , For safety circuit switch off
		SR-O	SR rear end output	Brown	

Magnetic ruler MCTC-TAP-A

Product composition

Model	Description	Remark
MCTC-PES-L9	MCTC-PES-L9 Safety box controller	1 pc/elevator
MCTC-TAP-A	Magnetic railing ruler	Determine by elevator traveling height
MCTC-MKF-A	Magnetic ruler intalling package for homelift	1pc/elevator
MCTC-MW-A	Installing bracket package of safety box controller	1pc/elevator

Hoistway electric--MBT-PIB-A24

Product summary

Pit inspection box integrated with emergency switch,light,socket etc components. All outer wiring adopted by plug-in terminal

Product feature

1.The product made by ABS material. High safety coefficient

2.LED bulb with protect cover. Energy saving and high protection level.

3.Overall aesthestic design, Clean,symbol is all ready

MBT-PIB-A24

Homelift complete set cable

Product feature

Less core number,and more brief function
Traveling cable 13+4
10 cores cable in cartop and carbin

Elevator round PVC control cable

Elevator flat shap PVC controlling cable

TVVBP

Cable system

More simple wiring method,Whole set cable made by plug-in type
Richer applications--modularized cable for automatic generating cable combination according to customer's order.

Travelling cable clamp——MBT—HWC—A3

Shaft Modular Cable

Owning DNV(ISO9001),CCC,UL,CE,RoHS professional accreditation.

Machine room cable	Cabin cable	Shaft cable	Travelling cable
Power supply cable Motor cable Speed governor cable Speed governor movement release cable Brake power supply cable Brake inspection cable Parallel cable	Car operator cable Car door lock cable Safety tongs cable Door position cable Light curtain cable Carbin Fan cable Carbin light cable Weighing switch cable	Calling cable Speed governor and limit cable Landing door lock cable Shaft safety cable Shaft light cable Pit safety cable Reserved cable	Travelling cable

电气系统集成专家

苏州默纳克控制技术有限公司
Suzhou MONARCH Control Technology Co., Ltd.
地址：苏州市吴中区越溪友翔路16号
总机：(0512)6637 6666
传真：(0512)6285 6720
客服：400-777-1260
http：//www.szmctc.com

贝思特电气（嘉兴）有限公司
BSTJiaXing Electric Co., Ltd.
地址：浙江省嘉兴市嘉善县姚庄镇福泰路28号（314117）
电话：+86 0573 84775858
传真：+86 0573 84775858
http：//www.shbst.com

由于本公司持续的产品升级造成的内容变更，恕不另行通知
版权所有© 深圳市汇川技术股份有限公司
Copyright © Shenzhen Inovance Technology Co., Ltd.