P/N sm1087.doc
5/1/2011
Rev. 5

OPERATING AND MAINTENANCE

MANUAL FOR

PPM TECHNOLOGIES

BUCKET ELEVATORS

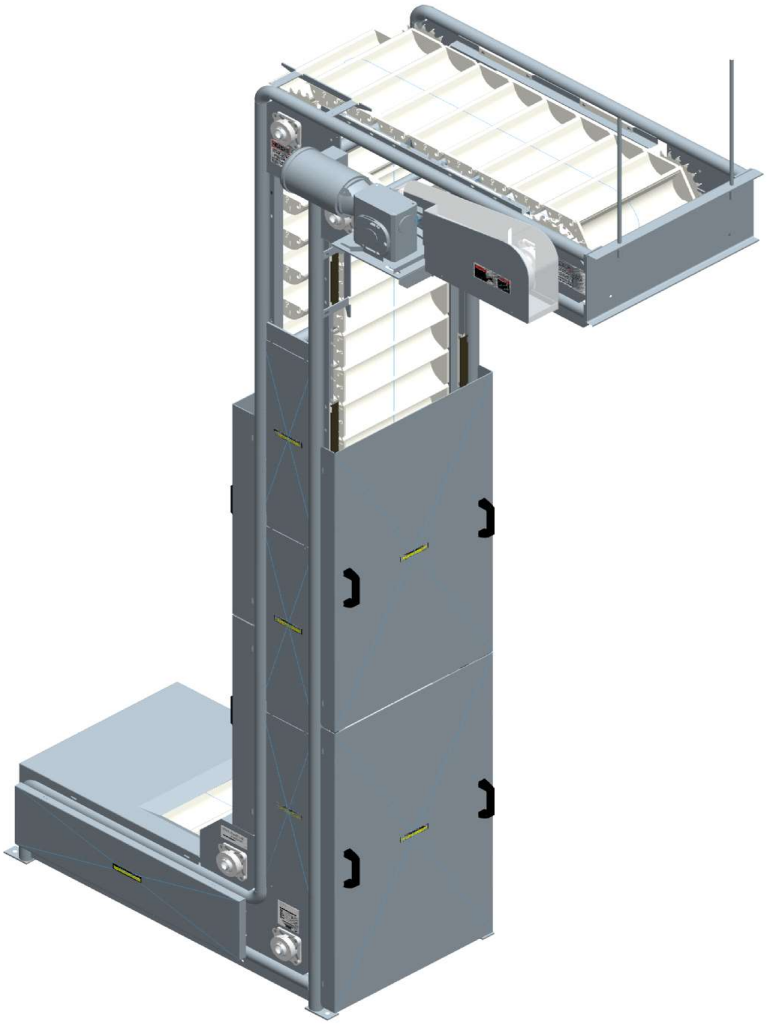

PPM Contact information:

PPM Contact information:

AMERICAS
PPM TECHNOLOGIES
500 E. Illinois St.
Newberg, OR 97132 | USA
(800) 523-8123 toll free in the US
(503) 538-8575 fax

EUROPE|MIDDLE EAST|AFRICA
PPM TECHNOLOGIES EMEA LTD
UNIT 10 JONES (GC) WAY
GREAT YARMOUTH, NORFOLK UK NR31 0DW
44 +1493 658 801

Printed in the USA

Manual Revision Log

REV #	DATE	CHANGE DESCRIPTION	PG # MODIFIED	BY
0	10/28/03	Updated manual revision log	2	NJD
1	4/2/04	Added P/N and date to header	All	NJD
2	12/1/07	Changed bucket picture	1	KN
3	3/13/07	Added “ every time complete wash down” to 4.2	13	KN
4	2/7/08	Updated PPM to PPM	ALL	KN
5	5/1/11	Fixed fill name on title page headed	1	DER
6	2/22/19	UPDATED EMEA ADDRESS	2	LJB
7	10/1/21	Updated S shape bucket wheel diagram B	11	HF

PPM Technologies reserves the right to alter at any time, without notice and without liability or other obligations on its part, materials, equipment specifications, and models. PPM Technologies also reserves the right to discontinue the manufacture of models, parts, and components thereof.

PPM TECHNOLOGIES

TABLE OF CONTENTS

SECTION	DESCRIPTION	PAGE No.
1	**BUCKET ELEVATOR**	**4**
1.1	Introduction	4
1.2	Safety	4
1.3	General precautions	5
1.4	Warranty Information	5
2	**INSTALLATION**	**5**
2.1	Uncrating	5
2.2	Erection	6
2.3	Wiring	8
2.4	Start Up	8
2.5	Installing Chains	9
2.6	Adjusting Chain Tension	9
2.7	Installing Buckets	9
2.8	Installing Covers	10
	Bucket Flow Diagrams	10
3	**OPERATION**	**13**
3.1	Bucket Elevator Capacity	13
4	**MAINTENANCE**	**14**
4.1	Cleaning	14
4.2	Lubrication	14
4.3	Speed Reducer	15
4.4	Alignment of Buckets	15
4.5	Relieving a Jam	15
4.6	Chain Tension	15
4.7	Adjusting the Torque Limiter	16
4.8	Mayr Roba slip hub (Torque limiter used 1990 to present)	17
4.9	Dodge Torque Tamer (Used prior to1990)	18
5	**TROUBLESHOOTING**	**19**
5.1	Return merchandise procedure	20
6	**RECOMMENDED SPARE PARTS LIST**	**21**
	Records – Model Number Info	
7	**LOST OR DAMAGED GOODS**	**22**
Appendix A	**Cap screw Identification**	**23**
Appendix B	**Recommended Torque Values**	**24**

PPM Technologies reserves the right to make changes to the design, materials, and specification of the equipment described in this document without obligation to notify any person or organization of the revision of change. PPM Technologies further reserves the right to discontinue the manufacture and sale of any components described in this document.

1 BUCKET ELEVATOR

1.1 INTRODUCTION

PPM Conveyors are designed for maximum durability and minimum sanitation effort.
The PPM bucket conveyor features plastic buckets in 6", 9", and 12" pitch. They are available in various standard widths.

The frame configuration will be either C type or S type. There are also custom variations on these two basic designs, such as a Z type, inclined vertical type, extended infeed/discharge type, and/or types with unique custom components.

Often PPM bucket conveyors will be equipped with a multiple **product discharge station** located before the head/drive end of the machine. It is important to **specify the model number** from the PPM tag attached to the machine **when ordering replacement parts**.

When designing equipment PPM Technologies has taken into consideration product density, conveyor length/incline, and operating speed. If any of these parameters are changed from the original, consult our factory and the project manager to confirm the operation and capacities are still valid.

This manual should be read completely before installing or operating the PPM bucket elevator.

Failure to follow the operation and maintenance procedures contained in this manual could result in serious personal injury.

In the event that repair is required to the bucket elevator, please take corrective action to avoid possible injury to personnel, the machine, and to guard against product contamination.

Engineering Staff	(503) 538-3141 Ext. 5305
Parts department	(503) 537-5302
Field service	(503) 537-5324

1.2 Safety

Safety must be considered a basic factor in machinery operation at all times. Maintain a safety training and safety equipment operation/maintenance program for all employees. Most accidents are the result of carelessness or negligence.

The following safety instructions are basic guidelines and should be considered as minimum provisions. Additional information shall be obtained by the purchaser from other sources including the latest editions of American Society of Mechanical Engineers. Refer to Standards ANSI B20.1 ANSI B15.1 ANSI A12.1
ANSI B20-1A1985.

It is the responsibility of the contractor, installer, owner, and user to install, maintain, and operate the conveyor components and conveyor assemblies manufactured and supplied by PPM TECHNOLOGIES INC. in such a manner as to comply with the Williams-Steiger Occupational Safety and Health Act, and with all state and local laws and ordinances and the American National Standard Institute Safety code.

SAFETY DEVICES AND CONTROLS must be purchased and provided by the purchaser/owner as required by applicable laws, standards, and good practice.

1.3 General precautions

Before connecting the power supply, make sure that the supply voltage and frequency corresponds to the equipment nameplate ratings, the equipment is properly grounded, and all conductors are adequately sized to carry the nameplate voltage and current.

Before operating the bucket elevator conveyor, make sure the following list and programs are completed:

- Emergency stop switches are installed, working and are clearly visible.
- All of the guards and covers are in place.
- Correct motor rotation as required by bucket flow direction.
- The machine is clear of obstructions, shipping blocks, supports, and tools.
- All bolted connections are tightened properly.
- All personnel are at a safe distance from machine and have been advised of the location and operation of all emergency controls and devices. Clear access to these controls and devices must be maintained at all times.
- Area of operation must be clean with proper lighting.
- Do not walk or stand on any part of the conveyor at any time.
- Do not poke or prod material in the conveyor.
- Do not place hands, feet, or any part of the body or clothing near any type of machinery.
- Do not overload conveyor or attempt to use it for other than its intended use.

1.4 Warranty Information

PPM Technologies' warranty is available only to the original purchaser of this equipment and applies only to defects in material and workmanship for a period of one (1) year from the date of shipment. There are no other warranties, which extend beyond the description of the goods at the time of sale, and no other warranties may be deemed made by or implied against PPM Technologies.

In addition, PPM Technologies' liability is limited to the repair or replacement, at its option, of any defective goods F.O.B. its place of business at Newberg, Oregon. PPM Technologies shall in no event be liable for any special, incidental or consequential damages, or loss of product/production resulting from any defect in goods sold by it.

Unauthorized modifications or the use of unauthorized replacement parts may damage the machine. Use only PPM Technologies approved replacement parts. PPM Technologies will not assume responsibilities for equipment performance subsequent to unauthorized modifications or the use of unauthorized replacement parts.

2 INSTALLATION

2.1 Uncrating

Inspect shipping crate prior to opening for visible damage. Document any damage on the bill of lading and notify both the Freight Company and PPM Technologies. Care should be taken as you open/remove the shipping crate and the equipment should be thoroughly examined for any damage that may have occurred during shipment. Check to ensure that there are no small parts left in the crate, such as belts, bolts, support members, etc. Freight damaged goods are the responsibility of the customer and the shipping company.
Equipment manuals are attached to the frame of the machine, or located inside the electrical control panels.

ALWAYS LIFT CONVEYOR EVENLY FROM INTENDED SUPPORT POINTS IN FRAME.

2.2 Erection (see diagram on following page)

The PPM bucket elevator is shipped to you fully assembled whenever possible. Should size or other factors require it to be shipped in sections, it will have been tested at the factory and each section clearly marked for assembly on location.

Base Section
Place in desired location and anchor loosely to floor with shims if necessary to level and plumb the machine. Carefully observe match marks if assembling in sections. Refer to bucket guide details.

Vertical Section
Place on the continuation of the base section. Carefully observe match marks. Use plumb bob to check vertical alignment. Secure bolts between sections and ensure that bucket guides are in proper position. Tall vertical section must be sway braced to building or other sturdy member.

Top Horizontal Section
Proceed with top section in same manner. Provide angle or rod support anchored to building or other sturdy member.

After erecting the bucket elevator, check to ensure that vertical and horizontal alignment is correct as you firmly tighten all anchor and support bolts. Alignment is of prime importance to proper bucket control, long chain life, and satisfactory performance.

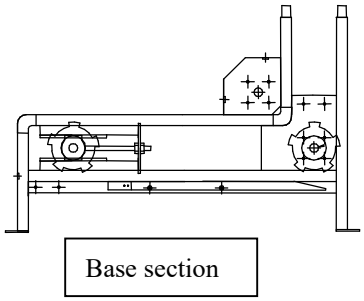

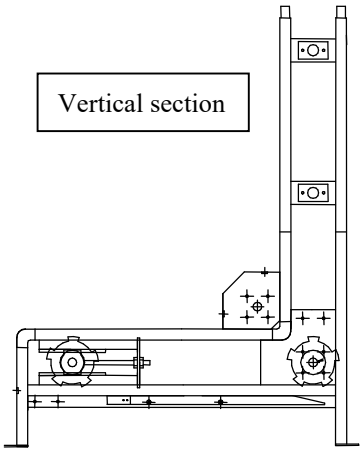

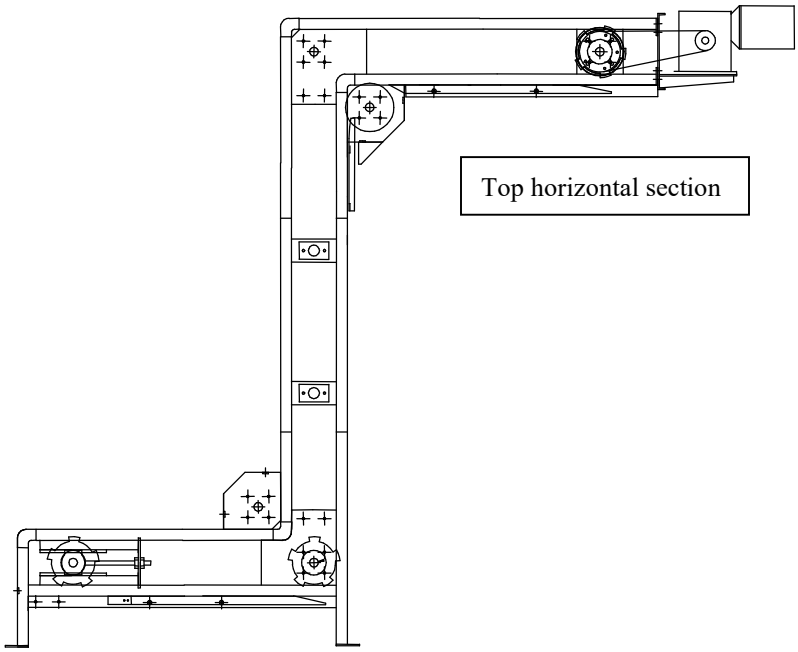

2.2 Erection Diagram

2.3 Wiring

Install a proper sized starter with start/stop controls and motor protection fuses for the amps shown on the motor nameplate. In the event of a power failure requiring any work on power connection ALWAYS disconnects the drive chain and make sure the rotation of the motor is as outlined under Start Up before applying power to the elevator.

2.4 Start Up

Your PPM bucket elevator was shipped with drive chain not connected because **proper rotation of motor must be determined PRIOR to running the unit.** **Running the machine backwards can do serious damage to the buckets.**

The standard location of the chain drive is on the upper right side of the bucket elevator when viewed from the infeed end. The actual drive location may vary depending on the application. **The motor must be wired so that the output shaft of the gear reducer rotates in the proper direction.** **The buckets on an S type bucket elevator approach the head sprocket over the top.** **The buckets on a C type bucket elevator approach the head sprocket underneath.** Test your bucket elevator after installing the bucket chains and again after installing the buckets. Refer to Chain Installation and Bucket Installation in the Installation section.

After wiring the motor and test running to determine the proper rotation, connect the drive chain using the chain connecting link provided. At this time see Installation of Chains and Installation of Buckets if they are not yet installed. Leave bolts in adjusting nut of torque limiter loose and start the motor. Buckets should begin to move and holding of the buckets will cause slippage in the torque limiter. Run unit with product and check for slippage. If slippage occurs, reset torque limiter until buckets begin to move.

Your PPM bucket elevator is equipped with a torque limiter mounted on the head shaft drive sprocket. Instructions regarding the proper use and adjustment of the torque limiter can be found in the Maintenance section.

CAUTION:

1. Gear reducer output shaft must be turning proper direction before attaching drive chain.
2. Be sure torque limiter is properly set with setscrew in a proper location.
3. Be sure torque limiter is at a minimum setting. Excessive torque in the torque limiter will cause damage to the bucket elevator should a jam occur.

Carefully read this entire manual before operating this machine.

2.5 Installing Chains (see bucket flow diagrams on the following pages)

Chains can be threaded from either discharge or infeed end of bucket elevator. It is usually easier to install chains, from the infeed take-up end, as described below. It is also recommended that the chain on the bucket guide wheel side of the machine be installed first. This will make it easier to set correct timing of guide wheels. Chains will be supplied in two rolls of proper length, they are identical, and can be installed on either side of your bucket elevator.
Chain Installation: (When referring to the diagrams on the following pages, be sure to note whether you are working with a C type or S type bucket elevator.) Stretch out chain in a straight line to eliminate damage. Start on the bucket guide wheel side of the machine. Thread chain (with pins facing inward) over infeed take-up sprocket into the chain runner, over to and under infeed 90 degree idler sprockets. It then continues up the vertical section to the upper 90 degree idler sprocket. Then over to, and around the discharge drive sprocket, as shown in DIAGRAM "B". Be sure the bucket pins are in the proper location relative to the bucket guide wheel. The chain then returns to the upper 90 degree idler sprocket where the bucket pins engage the bucket guide wheel as shown in DIAGRAM "C" (exception: AM model has round guide wheel in this location). It then continues to the lower 90 degree idler sprocket engaging with the bucket guide wheel as shown in DIAGRAM "D". The chain then must be properly positioned onto infeed take-up sprocket where bucket pins engage guide wheel as shown in DIAGRAM "A". Be sure to **correctly install the master link chain connector** at this time. **The master link connector clip** must be installed on the inward side (pin side) of chain, with the round part of the clip facing toward direction of chain travel. This is important to avoid chain guide interference and possible master link clip failure. To install chain on opposite side, repeat this procedure being sure bucket pins are facing inward and aligned directly across from each other. If installing chain from a point other than the infeed end, refer to the diagrams on the following pages as required.
<u>BE SURE:</u>

1. Bucket pins on opposite chains are aligned and facing inward toward each other.
2. Bucket pins engage and are timed properly with guide wheels
3. Master link clips are located on the inward (pin side) of chain, with round part of clip toward direction of travel.
4. Chain transitions smoothly from guide wheel to straight guide rails.
5. Chain is able to run smoothly in guide rails at all locations.
6. No foreign objects have been left in machine

After chains are installed, adjust the chain take-up bearing equally on either side of the bucket elevator to achieve correct chain tension. Refer to Adjusting Chain Tension. **Do not over tension**.

Adjust the torque limiter following instructions in the Maintenance section. Once the correct motor rotation has been obtained, the bucket elevator can be test run for few minutes to be sure chains are running correctly.

2.6 Adjusting Chain Tension

As mentioned, chain tension is critical to the proper operation of bucket elevator conveyors. Adjust tension evenly on both sides. Threaded take-up rod must be able to travel, and should never be directly fastened to frame bracket. You have achieved proper chain tension when the spring in the take-up assembly is slightly pretension. Most bucket elevators have a 3½" long stop tube located inside spring. When the spring is collapsed to 3 ½" long the chain tension is properly set. Be sure lock nuts on take-up assembly are tightened after adjusting. This setting should be monitored monthly and readjusted before spring length increases to 4½" in length. **When adjusting the take-up assembly, the adjustable bucket guide must be reset** to maintain bucket control onto the take-up sprockets. It is located on the base section, on the right side, at the end of the return run. It must be adjusted to hold buckets upside down to the point where the take-up guide wheel engages the buckets. **If this guide is not correctly located, serious damage can be done to the buckets.**

2.7 Installing Buckets (see bucket flow diagrams on the following pages)

Before installing all buckets, it is recommended that several buckets be installed and run for a short period of time to ensure proper tracking. Remove one UHMW Chain Guide Angle off the vertical section. The chain can now be pulled away form the vertical section of the frame far enough to get the chain pins into the bucket. If the chains are too slack, the bucket above may fall out as you spread the chains to install the next bucket.
CAUTION: DO NOT attempt to force the buckets onto the pivot pins. Jog the elevator with the start/stop switch a few bucket spaces at a time. As you add the weight of the buckets, the torque limiter may start to slip. Adjust as necessary as outlined in the Maintenance section. When all buckets are installed in the elevator, again reinstall the UHMW Chain Guide Angle and adjust the chain tension by as instructed in chain tension section.

IMPORTANT: DO NOT over tighten chains. Proper chain tension is essential to the successful operation of your bucket elevator.

2.8 Installing Covers

After your PPM bucket elevator is properly assembled and aligned, you need to install the covers if any were provided with your unit. Covers are match marked and are installed beginning at the infeed end. After initial installation, additional guarding or safety switches may be needed to meet applicable safety codes, regulations, etc. at your facility. PPM Technologies provides guarding to meet safety codes and guide lines for normal access to bucket elevators. Once the bucket elevator is positioned in the factory, it is our customers and/or the installation contractor's responsibility to review and verify that all safety codes for personnel around the bucket elevator have been met.

Bucket Flow Diagrams S type Bucket Elevator

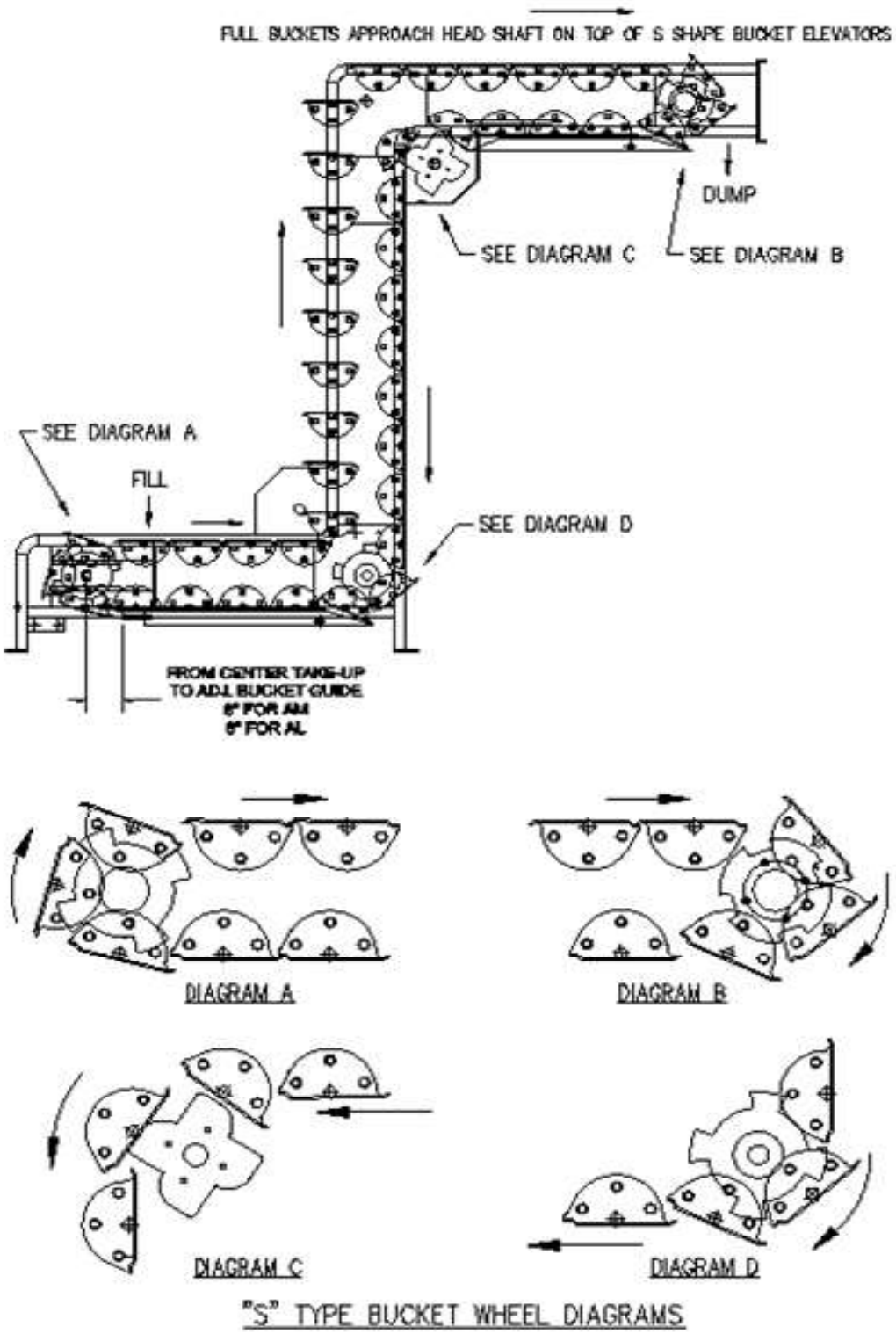

Bucket Flow Diagrams C type Bucket Elevator

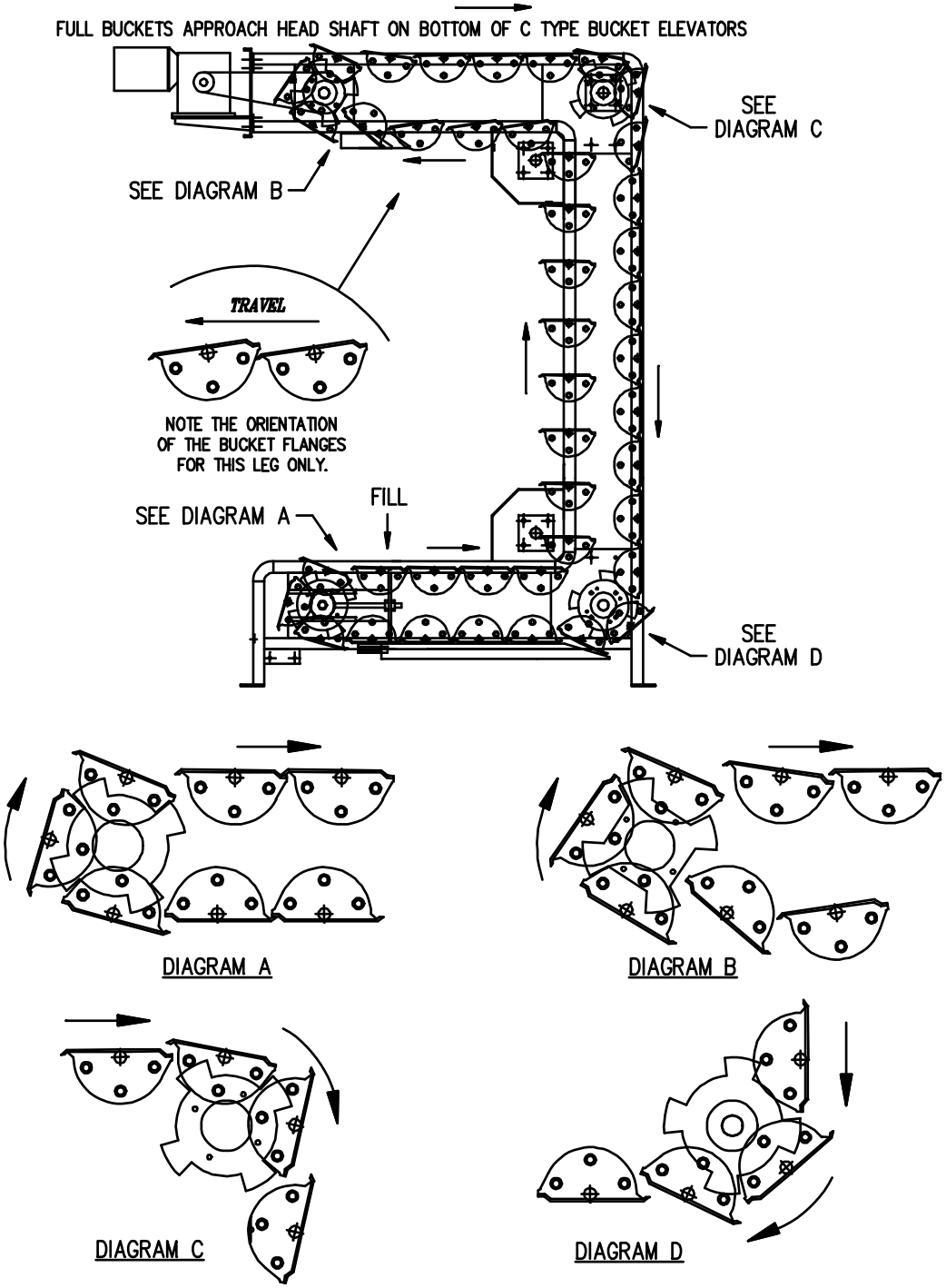

3 OPERATION

Operators should be trained to watch for and avoid any unexpected changes in product flow, both at intake and discharge. Should a jam-up occur, they should stop the motor immediately to avoid unnecessary wear on the torque limiter. They should call for maintenance at the first sign of any unusual condition such as unusual sounds, or bucket motion which may be caused by improper chain tension.

Correct chain tension is fully described under Installation Chains in the Installation section. We cannot over emphasize the warning against operating your bucket elevator at speeds greater than shown in the capacity table. For longer chain life, and if product level in the buckets will permit, slow down the conveyor speed as much as possible. Small changes in speed may be accomplished by a change of drive sprockets. If increasing speed, consult with PPM Technologies prior to making changes.

CAUTION: **DO NOT** exceed amp reading on motor nameplate. Greater increase in speed may require replacing the speed reducer and a higher horsepower motor. Please consult the factory

3.1 Bucket Elevator Capacity

NOTE: If product density exceeds 41 pounds per cubic foot, Contact PPM Technologies engineering department, before operating bucket elevator

MODEL	SINGLE BUCKET CAPACITY IN CUBIC FEET	BUCKETS PER MINUTE AT MAX. SPEED	MAX. CHAIN SPEED FT./MIN.	CAPACITY MAX CUBIC FT./HR.
AM TYPE 6” PITCH				
AMCTechnologies8	.033	76	38	152
AMCTechnologies12	.050	76	38	228
AMCTechnologies15	.063	76	38	287
AMCTechnologies18	.075	76	38	342
AMCTechnologies24	.100	76	38	456
AL TYPE 9” PITCH				
ALCTechnologies12	.14	51	38	425
ALCTechnologies18	.21	51	38	638
ALCTechnologies24	.28	51	38	851
ALCTechnologies30	.35	51	38	1064
ALCTechnologies36	.42	51	38	1277

4 MAINTENANCE

Proper maintenance of your PPM bucket elevator is essential to maintain long service and the dependability you expect. Preventive maintenance can avoid production breakdown repairs.

4.1 Cleaning

Set up a regular cleaning schedule and follow it.
Spillage of product onto the chains, chain track, bucket guide bar, sprockets, and bucket discharge mechanism can interfere with bucket travel and control of the buckets. Product can also work around the bucket pivot bosses preventing the free action of the buckets on the chain pivot pins.

I slack off tension on chain and blow out any product with compressed air or wipe or scrape clean any build-up.

II Remove any buckets which are not free to rotate, clean pins and pivot bosses. Reset chain tension.

III Plastic buckets may be cleaned in a mild solution of non-detergent such as Ivory or Joy in warm water or they may be steam cleaned at no more than 250 degrees Fahrenheit without soap.

IV Keep the area around equipment cleaned up. Serious conveyor damage can occur from brooms, squeegees, or hoses, left leaning under or on bucket elevator.

4.2 Lubrication

I Shaft Bearings

Grease every 1000 hours, which computes to every six months at 8 hours daily operation or two months at 24 hours daily operation.

DO NOT OVER GREASE. Too much grease or too much grease under pressure will rupture the seals, reducing the life of the bearings.

Use any good quality gun type grease. Apply until a very slight bead appears around the bearing seal.

II Chains

Lubricate every 500 hours, which computes to every 3 months at 8 hours daily operation , every month at 24 hours daily operation and every time complete wash down.

To extend chain life, apply two drops of oil between the link side plates on each side of the chain at each roller using a good quality food grade mineral oil. On stainless steel chains only, a water drip line can be utilized as an effective lubricant substitute for oil.

CAUTION: Applying oil to the roller is ineffective. The oil is thrown off by centrifugal force as the roller turns.

4.3 Speed Reducer

Tigear speed reducers with Relialube systems are properly filled at the factory with sufficient lubrication. With Relialube, the break-in period and subsequent oil change ordinarily experienced with conventional reducers has been eliminated. Oil need not be added at installation or changed after unit has been put into service. Change oil only when performing maintenance that requires gearbox disassembly. In this case, use only Mobil SHC-634. Input bore lubricant is supplied. If re-lubrication is required use Fel-Pro CSA Antisieze or Mobiltemp 78 grease in the bore and on the motor shaft.

4.4 Alignment of Buckets

Frequently observe the buckets as they travel upward in the vertical section of your bucket elevator. The buckets should be laterally level and square with the frame. Misalignment may be due to improper alignment in the bucket guide wheel on one of the drive shaft sprockets, or to uneven chain wear or a floating idler sprocket seized to the shaft, or chain stretch.

4.5 Relieving a Jam

Should a jam occur, turn off motor at once. Inspect the unit carefully to locate the jam-up. It is safe to back up the buckets by hand a few inches. **DO NOT RUN THE ELEVATOR BACKWARDS**. It may be necessary to disconnect the drive chains or back off the pressure on the torque limiter. Back up only far enough to release the jammed bucket. It may be necessary to rock the bucket on its pivot to make sure it's free. It may be necessary to relieve the elevator chains to accomplish this. Always check the jammed bucket for damage which could make it inoperable. If so, replace with a new bucket. Check the chain pins to ensure the jam-up did not bend or break them. If the bucket is jammed against a foreign object, or a bucket guide moved out of place, correct the condition causing the jam-up. Always remember; check the chain timing /alignment, reset the torque limiter, and the check chain tension before restarting the elevator.

4.6 Chain Tension (see Adjusting Chain Tension in installation section)

Maintaining chain tension at all times is very important to the proper operation of your bucket elevator. Loose chains, which can buckle or loop on the slack (return) side of their travel, can cause trouble. Running with the chains too tight will result in undue wear on the chain. CHECK FREQUENLY. The directions for testing and adjusting for proper chain tension are found in the Installation section of this manual. Care must be taken that each side is adjusted to result in equal tension on both chains. **It is also very important to relocate the adjustable bucket guide when adjusting chain tension**. Your FMC bucket elevator should be in service for many years, and with proper operation and care, as outlined herein. It may be that you will reach the end of the take-up, with chains and buckets still in operable condition. In this event, slack off and disconnect the chains, remove one bucket and a length of chain equal to one-bucket space, move the take-up forward, reconnect the chain, adjust the tension and resume operation. Over a period of time the chains will wear out or stretch to the point that the buckets will no longer overlap correctly throughout the conveyor. That is, some of the buckets may overlap the wrong way or not at all. In this event there is no alternative but to replace the chains. Refer to Installing Chains in the Installation section.

4.7 Adjusting the Torque Limiter

Several times we have mentioned the importance of the torque limiter which gives the bucket elevator permanent protection against overloads while starting, or running, by slipping at any preset load. It resumes without resetting when this overload is relieved. It is simple in design and operation and it requires no lubrication and minimum maintenance. It should be adjusted to the minimum required torque setting, with little or no slipping at start up with normal full load.

The torque limiter consists of a hub assembly with a keyway and setscrew to securely attach to a drive shaft. A conical spring, a pressure plate, and fiber friction discs, react upon driven sprocket mounted on an oil impregnated bushing. The adjusting nut and adjusting nut lock/set screw must be adjusted to the appropriate position to assure proper performance. This setting should be checked regularly, especially if drive is slipping when buckets are fully loaded or during start up.

The torque limiters used by PPM Technologies vary, depending on the model and year built. The following pages contain general information on common torque limiters. If additional information is required, please contact PPM Technologies customer service department.

To adjust a Mayr Roba slip hub torque limiter.

1. Remove locking hex bolt (item 4)
2. Turn adjusting nut by hand until lock washer contacts cup springs (items 3 &13)
3. Turn adjusting nut with face wrench provided, until proper torque setting is achieved.
4. Align markings on thrust washer (item 2) with markings on adjusting nut (item 3) at the closes desired setting.
5. Replace locking hex bolt to secure adjusting nut to lock washer.

To adjust a Dodge Torque Tamer torque limiter.

1. Remove locking setscrew (item 7).
2. Turn adjusting nut (item 6) until hand tightened. Be sure locking set screw is located to seat in one of seven spline notches in hub. Do Not tightens onto threads of hub.
3. With a small wrench evenly tighten all three tension cap screws (item 8) until heads bottom out.

Note: This will give maximum torque setting. To decrease setting reverse procedure and back off adjusting nut to locate setscrew in another spline notch. Be sure to re-tighten all three tension screws until they bottom out.

NOTE: If for some reason your bucket elevator has not been operational for an extended period of time, check the torque limiter for proper function. Repair or free up any seized parts prior to operation of bucket elevator.

4.8 Mayr Roba slip hub (torque limiting clutch)

Typically used on PPM bucket elevators built after 1989.
When ordering parts, please specify size 3, 4, or rarely used size 5.

REF	QTY	DESCRIPTION	ROBA PART NO.
1	1	HUB ASSEMBLY	Technologies
2	1	THRUST WASHER	Technologies
3	1	ADJUSTING NUT	Technologies
4	1	LOCKING SCREW	Technologies
5	1	CUP SPRINGS	PART 5
6	1	FRICTION LININGS	PART 6
7	1	BEARING BUSHING	PART 7
8	1	SET SCREW	Technologies
12	1	CHAIN SPROCKET	SEE PPM DWG
13	1	LOCK WASHER	Technologies

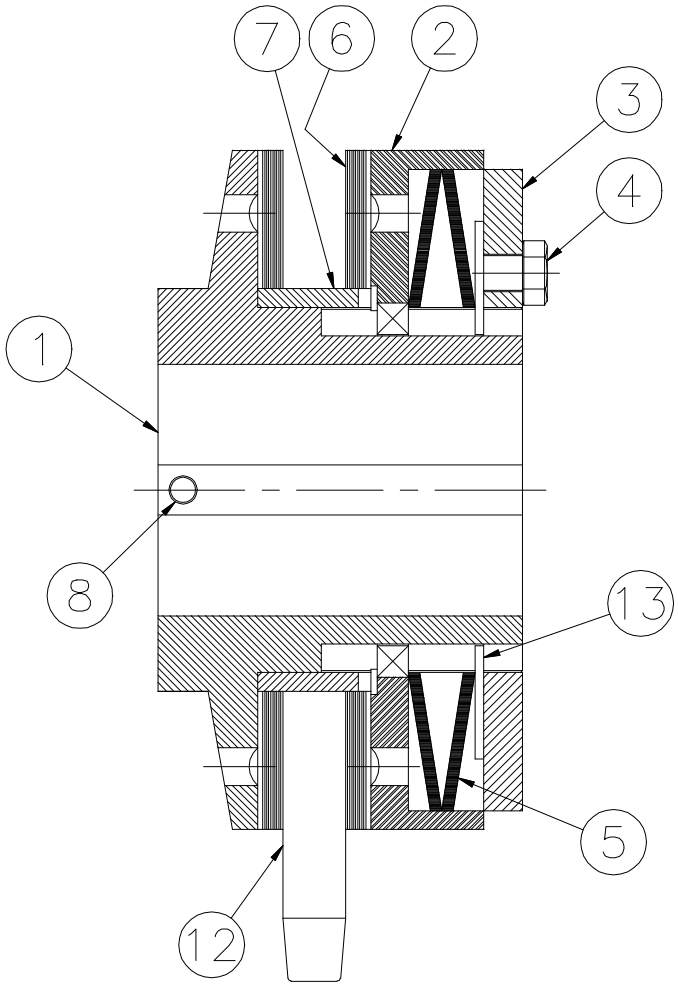

4.9 DodgeTorqueTechnologiesTamer

Used on PPM bucket elevators prior to 1990.

REF	QTY	DESCRIPTION	DODGE PART NO.
1	1	HUB ASSEMBLY	Technologies
2	1	HUB SET SCREW	Technologies
3	1	CONICAL SPRING	096043
4	1	PRESURE PLATE	391383
5	1	FRICTION DISC	096077
6	1	ADJUSTING NUT ASSEMBLY	391384
7	1	ADJUSTING NUT SET SCREW	Technologies
8	1	TENSION SCREW	391395
9	1	BUSHING 3/8” LONG	096071

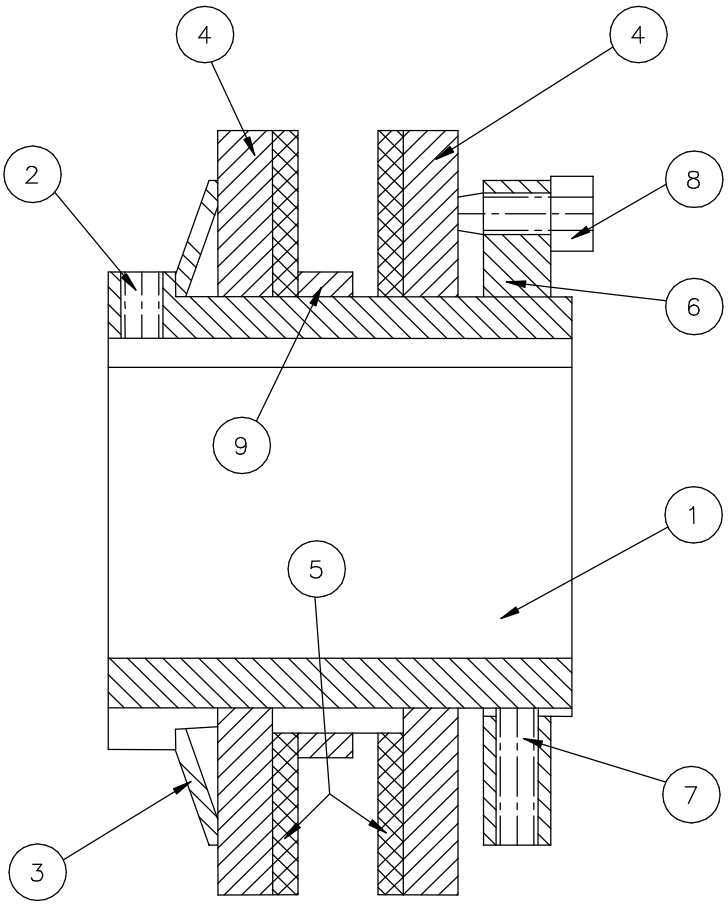

5 TROUBLESHOOTING

PROBLEM	PROBABLE CAUSES	CORRECTION
Build-up of material under unit, on chain track and sprockets.	Over filling buckets.	Check and adjust rate of flow of material into buckets.
	Spillage of material at intake.	Redirect chute, spout, conveyor, or feeder so ALL material enters intake hopper.
	Back-up of material at discharge.	Adjust rate of flow through machine being fed. Adjust position of any Bin Level Controls to allow plenty of room for material.
	Strong air currents blowing light material into machine.	Shield intake and discharge areas. Against air currents
Bucket Jam.	Insufficient carrier chain tension, allowing chain to buckle around sprockets and sag between sprockets.	Relieve the jam-up as described in "Relieving a jam-up" and adjust chain tensions as outlined under "Installing Chains" in maintenance section.
	Bent pivot pins, preventing free swinging of bucket(s) on their pivots.	Remove bucket, straighten or replace bent pin(s) and reinstall bucket. Test for free swinging.
	Misalignment of buckets (buckets not level in vertical section due to uneven chain).	Follow procedure outlines under "Alignment of Buckets" in Maintenance section, or stretch tight chain.
	Misalignment of buckets due to incorrect setting or slippage of timing plate.	Follow procedures outlined under "Alignment of Buckets" in Maintenance section to adjust timing plate.
	Missing control roller on bucket.	Replace bucket.
	Build up of spilled material in pivot holes on bucket(s) preventing free swinging of buckets on their pivots.	Remove bucket(s) and clean out pivot holes and clean off chain pivot pins and test buckets for free swinging.
	Build up of spilled material on chains, chain tracts and/or sprockets.	Clean out all parts affected.
	Worn out bucket carrier chains, increasing the distance between the buckets.	Replace BOTH chains.
	Holes in bucket pivot bosses worn out of round affecting action of buckets.	Replace worn buckets.

5 TROUBLESHOOTING CONTINUED.

PROBLEM	PROBABLE CAUSES	CORRECTION
Buckets not level in vertical run.	Floating idler sprocket seized to shaft.	Clean and free up any idler sprocket that is seized to shaft. Keep properly lubricated. See maintenance section.
	Uneven chain wear.	Follow procedure outlined under "Chain Tension" in Maintenance section to stretch tight chains.
Elevator stalls in usage for no apparent reason.	Torque limiter not tight enough.	Adjust torque limiter, as outlined under "Adjusting Torque Limiter" in Maintenance section.
A series of buckets break when bucket travel meets interference.	Torque limiter too tight.	Drive sprocket in torque limiter must be allowed to slip when bucket travel interference occurs. Adjust torque limiter, following procedure and observing CAUTION described under "Adjusting Torque Limiter" in Maintenance section.

5.1 RETURN MERCHANDISE PROCEDURE:

1) Have part number and purchase order ready.
2) **Call PPM Parts Department @ 1-503-538-3141 ext. 5302, obtains RMA #.**
   a. PPM Parts Department will not be able to tell you if the parts are under warranty, as they need to inspect the parts.
   b. Although your parts may be less than one year old, it depends on the type or cause of failure and may not be under warranty.
   c. PPM Technologies reviews failures and determines if the parts are under warranty.

3) Send parts back to: **PPM Technologies, Inc.**
500 E. Illinois St.
Newberg, Oregon 97132
RMA#

   a. Items returned w/o RMA # will NOT BE ACCEPTED and will be sent back to customer.

3) Once parts are repaired they will be sent back to our customer VIA:
   a. **UPS ground (5 days) unless otherwise arranged.**

The information in this publication is intended to cover a variety of installations and requirements. It is to be expected that situations will arise that have not been adequately covered by the foregoing data and should difficulties arise please contact your local representative of PPM Technologies who will assist you to obtain a satisfactory installation or contact the PPM Service Department at the above number.

6 RECOMMENDED SPARE PARTS LIST

We recommend that you carry in stock a minimum quantity of spare parts for your PPM bucket elevator.
Please be sure to **specify Model Number** of conveyor when ordering parts

1	Motor (Usually ¾ hp 56 C-face, verify with model number)
5	Buckets with plugs and bushings (Buckets for conveyors with a remote dump station have special oversize roller/bushing)
2	Connector Link (for bucket chain)
2	Friction Discs (please verify make and size of torque limiter)

There may be included with this manual, a custom recommended spare parts list, and drawings specific to your bucket conveyor model. When ordering parts for any elevator, please specify part number. Should you require a part not shown in this manual or lists, please specify model number shown on serial number tag when ordering parts.

ADD YOUR CONVEYOR INFORMATION HERE FOR FUTURE REFERENCE

NOTE: THE PPM TECHNOLOGIES MODEL NUMBER IS THE MOST HELPFUL INFORMATION FOR IDENTIFICATION

MODEL NO:- BED-_____

SERIAL NO:- SPC-_____

DESCRIPTION:- _____ ____" BUCKET ELEVATOR (_____ STYLE)

7 LOST OR DAMAGED GOODS:

THOROUGHLY INSPECT AND COUNT ALL SHIPMENTS IMMEDIATELY UPON ARRIVAL. OUR RESPONSILBILTY FOR ALL SHIPMENTS IS CEASED WHEN THE CARRIER SIGNED THE BILL OF LADING.

If goods are received short or in a damaged condition, it is important that you notify the carrier and insist on a notation of the loss or damage across the face of the freight bill; otherwise no claim can be enforced against the transportation company.

If concealed loss or damage is discovered, notify your carrier at once and request an inspection. This is absolutely necessary. A concealed damage report must be made within 15 days of delivery of shipment. Unless you do this, the carrier will not entertain any claim for loss or damage. The agent will make an inspection and grant a concealed damage notation. If you give the Transportation Company a clear receipt for goods that have been lost in transit, you do so at your own risk and expense.

We are willing to assist you to collect claims for loss or damage, but this willingness on our part does not make us responsible for collection of claims or replacement of material. The actual filing and processing of claims is your responsibility.

* If your shipment is crated or wrapped, you should sign the Bill of Lading noting “subject to Concealed Damages”.

APPENDIX A **CAPSCREW IDENTIFICATION**

SAE Grade 1 / SAE Grade 2 / ASTM A307 (unacceptable)

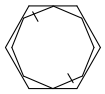

SAE Grade 3 (unacceptable)

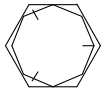

SAE Grade 5 / ASTM A449 (acceptable)

ASTM A325 (acceptable)

ASTM A354 Grade BB (acceptable)

ASTM A354 Grade BC (acceptable)

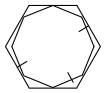

SAE Grade 5.1 (acceptable)

ASTM A193 Grade B7 (acceptable)

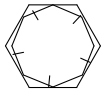

SAE Grade 7 (acceptable)

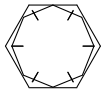

SAE Grade 8 (acceptable)

ASTM A490 (acceptable)

PPM TECHNOLOGIES

APPENDIX B **RECOMMENDED TORQUE VALUES**

	S.A.E. GRADE 5 TORQUE		S.A.E. GRADE 8 TORQUE	
BOLT SIZE	DRY **(FT. LBS.)**	**LUBRICATEDO R PLATED (FT. LBS.)**	DRY **(FT. LBS.)**	**LUBRICATED OR PLATED (FT. LBS.)**
1/4Technologies20 1/4Technologies28	8 10	6 8	12 14	9 10
5/16Technologies1 8 5/16Technologies2 4	17 19	13 15	24 27	18 20
3/8Technologies16 3/8Technologies24	30 35	23 27	45 50	34 38
7/16Technologies1 4 7/16Technologies2 0	50 55	38 42	70 80	53 61
1/2Technologies13 1/2Technologies20	75 85	57 65	105 120	80 91
9/16Technologies1 2 9/16Technologies1 8	110 120	84 91	155 170	118 129
5/8Technologies11 5/8Technologies18	150 170	114 129	210 240	160 182
3/4Technologies10 3/4Technologies16	270 300	205 228	375 420	285 320
7/8Technologies9 7/8Technologies14	430 475	327 361	610 670	464 509
1”Technologies8 1”Technologies12 1”Technologies14	645 705 720	490 535 547	910 1000 1015	692 760 771

PPM TECHNOLOGIES

Material Safety Data Sheet

SECTION 1: PRODUCT AND COMPANY IDENTIFICATION

General Electric Co.
One Plastics Ave.
Pittsfield, MA 01201

GE Plastics Canada, Ltd.
2300 Meadowvale Blvd.
Mississauga, ONT L5N 5P2

Visit GE Plastics on the Web at WWW.GEPLASTICS.COM

PHONE NUMBERS

Emergency Medical (24 HOUR)	800/447Technologies4545
Emergency Transportation/CHEMTREC (24 HOUR)	800/424Technologies9300
Other Emergency Information (24 HOUR)	812/831Technologies7001
Non-Emergency Information :	
For Resin Products	413/448Technologies5800
For Structured Products	413/448Technologies5400

PRODUCT IDENTIFICATION

Product Identifier:	EXPERIMENTAL XXH310 Blends
CAS Number:	Not available Technologies please call GE Plastics for information
Product Description:	Experimental material
Product Use:	May be used to produce molded or extruded articles or as a component of other industrial products.

SECTION 2: COMPOSITION/INFORMATION ON INGREDIENTS

Components listed below are physical or health hazards as defined in the Hazard Communication Standard. The quantities represent typical or average values for the materials shown. Additional compositional data are provided in Section 15, REGULATORY INFORMATION, subject to supplier notification requirements.

Component Name	%	CAS Number	OSHA PEL	ACGIH TWA	GE Recommended Exp. Limits
Graphite	10 Technologies 30	7782Technologies42Technologies5	No PEL established	2 mg/m3 TWA (respirable fraction, all forms except graphite fibers)	Not established
Talc (Mg3H2(SiO3)4)	10 Technologies 30	14807Technologies96Technologies6	No PEL established	2 mg/m3 TWA (respirable fraction, particulate matter containing no asbestos and < 1% crystalline silica)	Not established
Carbon black	5 Technologi	1333Technologies86Technologies4	3.5 mg/m3 TWA	3.5 mg/m3 TWA	Not established

Titanium oxide (TiO2)	es 10 1 Technologies 5	13463Technologies67Technologies7	15 mg/m3 TWA (total dust)	10 mg/m3 TWA	Not established

SECTION 3: HAZARDS IDENTIFICATION

Emergency Overview:

- Pellets with slight or no odor.
- Spilled material may create slipping hazard.
- Can burn in a fire creating dense toxic smoke.
- Molten plastic can cause severe thermal burns.
- Fumes produced during melt processing may cause eye, skin, and respiratory tract irritation. Severe over-exposure may result in nausea, headache, chills, and fever.
- Secondary operations, such as grinding, sanding, or sawing can produce dust which may present an explosion or respiratory hazard.

HMIS Ratings: Health = 0; Flammability = 1; Reactivity = 0; PPE = B

Potential Health Effects

Ingestion:	No hazard in normal industrial use.
Eye Contact:	Can cause mechanical irritation if dusts are generated.
Skin Contact:	Unlikely to cause irritation even on repeated contact.

CHRONIC / CARCINOGENICITY

NTP:	Not Tested.
OSHA:	Not Regulated.
IARC:	Not Listed.

SECTION 4: FIRST AID MEASURES

EYES:	Immediately flush eyes with plenty of water. Get medical attention if irritation develops or persists. After initial flushing, remove any contact lenses.
SKIN:	Wash with soap and water. Get medical attention if irritation develops or persists. For hot product, immediately immerse in or flush affected area with large amounts of cold water to dissipate heat. Cover with clean cotton sheeting or gauze and get prompt medical attention.
INGESTION:	No hazard in normal industrial use. Do not induce vomiting. Seek medical attention if symptoms develop.
INHALATION:	No specific treatment is necessary since this material is not likely to be hazardous by inhalation.

SECTION 5: FIRE FIGHTING MEASURES

FIRE FIGHTING:	Do not enter fire area without proper protection including self-contained breathing apparatus and full protective equipment. Fight fire from a safe distance and a protected location due to the potential of hazardous vapors and decomposition products.

EXTINGUISHING MEDIA: Water spray and foam. Carbon dioxide and dry chemical are not recommended because their lack of cooling capacity may permit re-ignition.

CONDITIONS OF FLAMMABILITY: Requires a continuous flame source to ignite.

EXPLOSION DATA: Material not sensitive to mechanical impact but is sensitive to static discharge under dust cloud conditions.

SECTION 6: ACCIDENTAL RELEASE MEASURES

GENERAL: Gather and store in a closed container pending a waste disposal evaluation. Allow molten material to solidify before disposal.

SECTION 7: HANDLING AND STORAGE

HANDLING: Follow recommendations on label and in processing guide. Prevent contact with skin and eyes. Use good industrial hygiene practices. Provide adequate ventilation. Secondary operations such as grinding, sanding, or sawing may produce a dust explosion hazard. Use aggressive housekeeping activities to prevent dust accumulation: employ bonding, grounding, venting, and explosion relief provisions in accordance with accepted engineering practices.

STORAGE: Store in a cool dry ventilated location. Isolate from incompatible materials and conditions. Keep container(s) closed. Minimize inhalation and contact with skin and eyes. Use good industrial hygiene practices. Provide adequate ventilation. Store in a cool dry place. Avoid excessive heat and ignition sources.

SECTION 8: EXPOSURE CONTROLS/PERSONAL PROTECTION

ENGINEERING CONTROLS: A continuous supply of fresh air to the workplace together with removal of processing fumes through exhaust systems is recommended. Processing fume condensate may be a fire hazard and toxic; remove periodically from exhaust hoods, ductwork, and other surfaces using appropriate personal protection. Local ventilation requirements must be determined to limit exposure to processing fumes in the workplace.

PERSONAL PROTECTION

EYE/FACE: Wear safety glasses with side shields or chemical goggles. In addition, use full-face shield when cleaning processing fume condensates from hoods, ducts, and other surfaces.

SKIN: When handling pellets or powder, avoid prolonged or repeated contact with skin. Wear long pants, long sleeves, well insulated gloves, and a face shield during melt processing. Appropriate clothing Technologies including chemical resistant gloves Technologies should be worn to prevent contact with processing fumes condensate.

RESPIRATORY: When using this product at elevated temperatures, implement engineering systems, administrative controls, or a respiratory protection program (including a respirator approved for protection from organic vapors, acid gases, and particulate matter) if processing fumes are not adequately controlled or operators experience symptoms of overexposure. If dust or powder are produced from secondary operations such as sawing or grinding, use a respirator approved for protection from dust.

SECTION 9: PHYSICAL AND CHEMICAL PROPERTIES

PHYSICAL STATE:	Solid
ODOR AND APPEARANCE:	Plastic pellet with slight odor.
MELTING POINT:	This product does not exhibit a sharp melting point but softens gradually over a wide range of temperatures.
VAPOR PRESSURE:	Negligible.
VAPOR DENSITY (AIR = 1)	ND
SPECIFIC GRAVITY (WATER = 1):	>1
WATER SOLUBILITY:	Insoluble
% VOLATILES:	Negligible
ODOR THRESHOLD (ppm):	ND
EVAPORATION RATE:	Negligible.
COEFFICIENT WATER/OIL:	Not established

SECTION 10: STABILITY AND REACTIVITY

STABILITY:	Stable
CONDITIONS TO AVOID:	Do not exceed melt temperature recommendations in product literature. In order to avoid autoignition/hazardous decomposition of hot thick masses of plastic, purgings should be collected in small, flat, shapes or thin strands to allow for rapid cooling. Quench in water. Do not allow product to remain in barrel at elevated temperatures for extended periods of time: purge with a general purpose resin. (See Section 8 for respiratory protection advice.)
REACTIVITY:	Not reactive under recommended conditions of handling, storage, processing, and use.
HAZARDOUS DECOMPOSITION PRODUCTS:	Carbon dioxide, Carbon monoxide.
CHEMICAL INCOMPATIBILITIES:	Strong oxidizing agents

SECTION 11: TOXICOLOGICAL INFORMATION

ACUTE HEALTH HAZARDS

Acute Oral:	Rat >5 g/kg Oral toxicity is estimated from tests on similar materials.
Eye Contact:	Product not considered primary eye irritant. When similar products, in finely divided form, were placed into the eyes of rabbits, slight transient redness or discharge occurred. This is consistent with the expected slightly abrasive nature of the resin particles.
Skin Contact:	Product not considered primary skin irritant. Draize Skin Primary Irritation Score (rabbit) for similar products, in finely divided form, for a 24Technologieshour exposure is 0. Not expected to be a skin sensitizer based on results of Modified Buehler Guinea Pig Sensitization Test from similar products.Dermal LD50 (rabbit) > 2g/kg, estimated.

SUBCHRONIC HEALTH HAZARDS

Subchronic Toxicity:	No data available.

CHRONIC HEALTH HAZARDS

Carcinogenic Properties

NTP:	Not Tested.
OSHA:	Not Regulated.
IARC:	Not Listed.
Special Studies:	Graphite Allergic dermatitis has been reported. Excessive concentration of nuisance dusts in the workroom may cause unpleasant deposits on the skin and in the

ears. Some evidence suggests that simple and complicated pneumonoconiosis similar to that seen in coal workers may occur with repeated exposure.
Carbon Black:
The International Agency for Research on Cancer (IARC) has determined that carbon black is a class 2B known animal and possible human carcinogen by the route of inhalation. Rats exposed to high doses of carbon black by inhalation developed statistically significant increases in lung fibrosis and lung tumors.

SECTION 12: ECOLOGICAL INFORMATION

General: This material is not expected to be harmful to the ecology.

EcoTox Values: Daphnia = mg/l

SECTION 13: DISPOSAL INFORMATION

Waste Disposal: Recycling is encouraged. Landfill or incinerate in accordance with federal, state and local requirements. Collected processing fume condensates and incinerator ash should be tested to determine waste classification. Mixing spent or discarded material with other materials may render the mixture hazardous. Perform a hazardous waste determination on mixtures.

Potential EPA Waste Codes: No data.

SECTION 14: TRANSPORTATION INFORMATION

Regulatory Status: Not Regulated.

SECTION 15: REGULATORY INFORMATION

Toxic Substances Control Act (TSCA): This product is in compliance with all rules and orders of TSCA.
WHMIS Product Classification: Not a controlled product.

If any components in this product are SARA 313 listed as reportable, they are shown below:

Component	CAS Number	%
No SARA 313Technologieslisted chemicals in this product.		

If any components in this product are known to the State of California to cause cancer and/or are reproductive hazards, they are listed below:

Component	Reason Listed	CAS Number	%
Carbon black	carcinogen, initial date 2/21/03 (airborne, unbound particles of respirable size)	1333Technologies86Technologies4	5 Technologies 10

SECTION 16: OTHER INFORMATION

Prepared by: Product Stewardship

® AVP, COLORXPRESS, CYCOLAC, CYCOLOY, CYTRA, ENDURAN, GELON, GELOY, GEMAX, GTX, LEXAN, LEXGUARD, LOMOD, MAGIX, NORYL, NORYL GTX, NORYL PPX, POLYMERLAND, PPO, PPX, PREVEX, SOLLX, SUPEC, ULTEM, VALOX, VISUALFX, XENOY and XYLEX are registered or pending trademarks of the General Electric Co.

DISCLAIMER: This Material Safety Data Sheet [MSDS] information is provided based on the Hazard Communication Regulations for your region or country and for the use of the persons required to receive this information under those regulations. The information is neither designed nor recommended for any other use or for use by any other person, including for compliance with other laws. GE does not warrant the suitability for use of this MSDS for any other material or product not specifically identified herein. GE does not warrant the accuracy or authenticity of this MSDS unless it has been obtained directly from GE, or posted or viewed on a GE website. Modification of this MSDS, unless specifically authorized by GE, is strictly prohibited. This MSDS is based on information that is believed to be reliable, but may be subject to change as new information becomes available. Because it is not possible to anticipate all conditions of use, additional safety precautions may be required. Since the use of this material is not under General Electric Company's control, each user is responsible for making its own determination as to the safe and proper handling of this material in its own particular use of this material. GENERAL ELECTRIC COMPANY MAKES NO REPRESENTATION OR WARRANTY, EITHER EXPRESS OR IMPLIED, INCLUDING AS TO MERCHANTABILITY OR FITNESS FOR A PARTICULAR PURPOSE. Each user should read and understand this information and incorporate it into individual site safety programs as required by applicable hazard communication standards and regulations.

ABBREVIATIONS:
- ACGIH: American Conference of Governmental Industrial Hygienists
- CAS: Chemical Abstracts Service
- CFR: Code of Federal Regulations
- CPR: Cardiopulmonary Resuscitation
- EPA: Environmental Protection Agency
- HMIS: Hazardous Material Identification System (National Paint and Coatings Association)
- IARC: International Agency for Research on Cancer
- OSHA: Occupational Health and Safety Administration (U.S.)
- NTP: National Toxicology Program
- PEL: Permissible Exposure Limit
- PPE: Personal Protective Equipment
- SARA 313: Superfund Amendments and Reauthorization Act, Section 313
- TLV: Threshold Limit Value
- TSCA: Toxic Substance Control Act
- WHMIS: Workplace Hazardous Materials Information System (Canada)