THANKS FOR CHOOSING ERNEST FLEMING!

VIBRO SEPARATOR & FILTER

OPERATING MANUAL

ERNEST FLEMING MACHINERY & EQUIPMENT Pty. Ltd

Address: 7/27 Mars Rd, Lane Cove West, Sydney NSW 2066 Australia
Phone: (61) 02 9427 3270
Fax: (61) 02 9427 3590
Email: sales@fleming.com.au

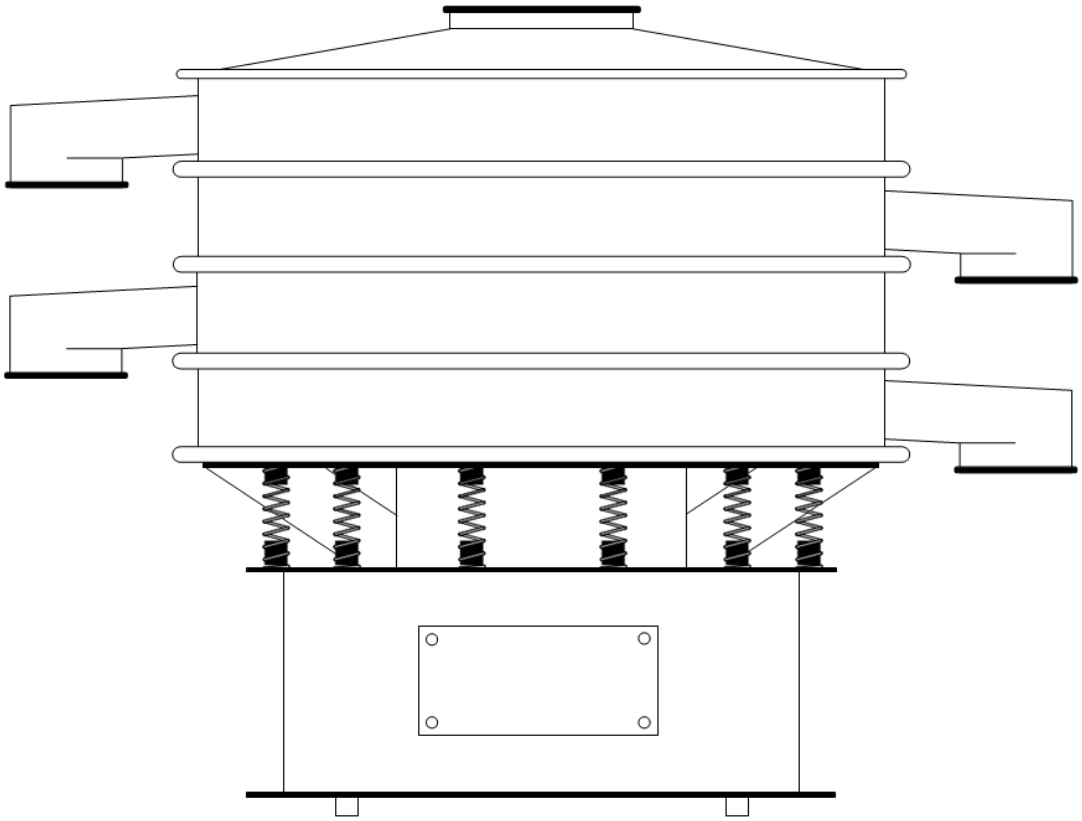

Contents

A. DRAWINGS AND DIAGRAMS 3
B. INSTALLATION, ADJUSTMENT AND OPERATION 16
1. Machine installation 16
2. Pre-inspection before running the machine 16
3. Inspection during the machine testing 16
4. Installation Start 16
5. Lower weight adjustment 17
6. Changing the screens 18
7. Trouble Shootings 20
C. MAINTENANCE 21
1. Daily Maintenance 21
2. Regular Maintenance 21

A. DRAWINGS AND DIAGRAMS

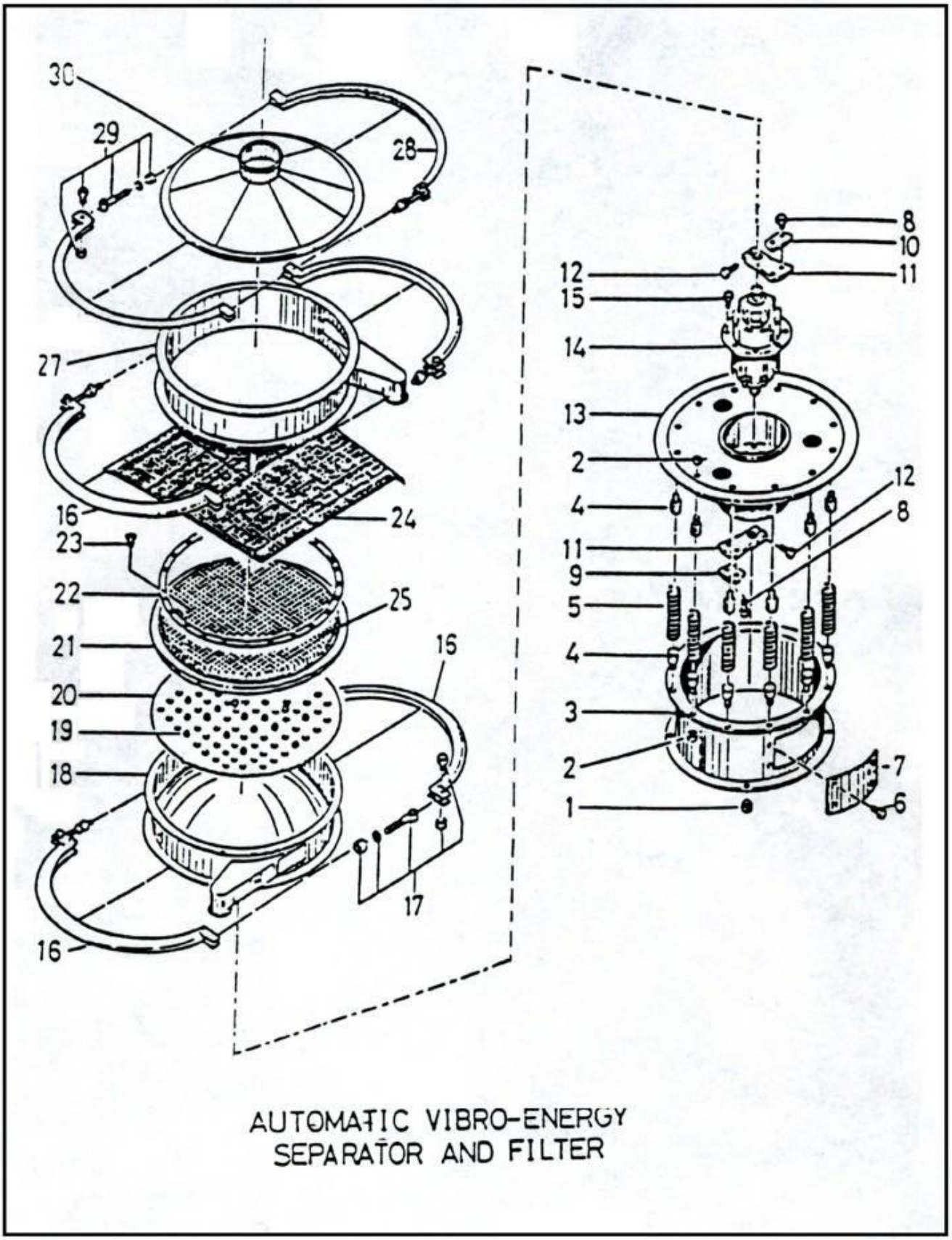

Flamingo	DESCRIPTIONS	PICTURE 1

1. RUBBER PAD
2. NUT
3. BASE
4. SPRING BOSS
5. SPRING
6. WINDOW BOLT
7. WINDOW
8. AID'S WEIGHT PLATE BOLT
9. LOWER ADD'L WEIGHT PLATE
10. UPPER ADD'L WEIGHT PLATE
11. UPPER & LOWER ECCENTRIC WEIGHT
12. BOLT
13. VIBRO BODY
14. MOTOR
15. BOLT
16. BIG "V" CLAMP RING
17. CLAMP RING BOLTS SET
18. BOTTOM
19. TAPPING BALL
20. BALL CLEANING DECK
21. LOWER FLANGE
22. UPPER FLANGE
23. SCREW
24. SCREEN CLOTH
25. SUPPORTING SCREEN
26. **********
27. UPPER FRAME
28. SMALL "V" CLAMP RING
29. CLAMP RING BOLTS SET
30. DUST COVER

P.S. PARTS NO.28 FOR THE REFERENCE OF LS-1200 & LS-1500 SERIES BOTH ARE BIG CLAMP RING SET INSTEAD OF SMALL CLAMP RING SET.

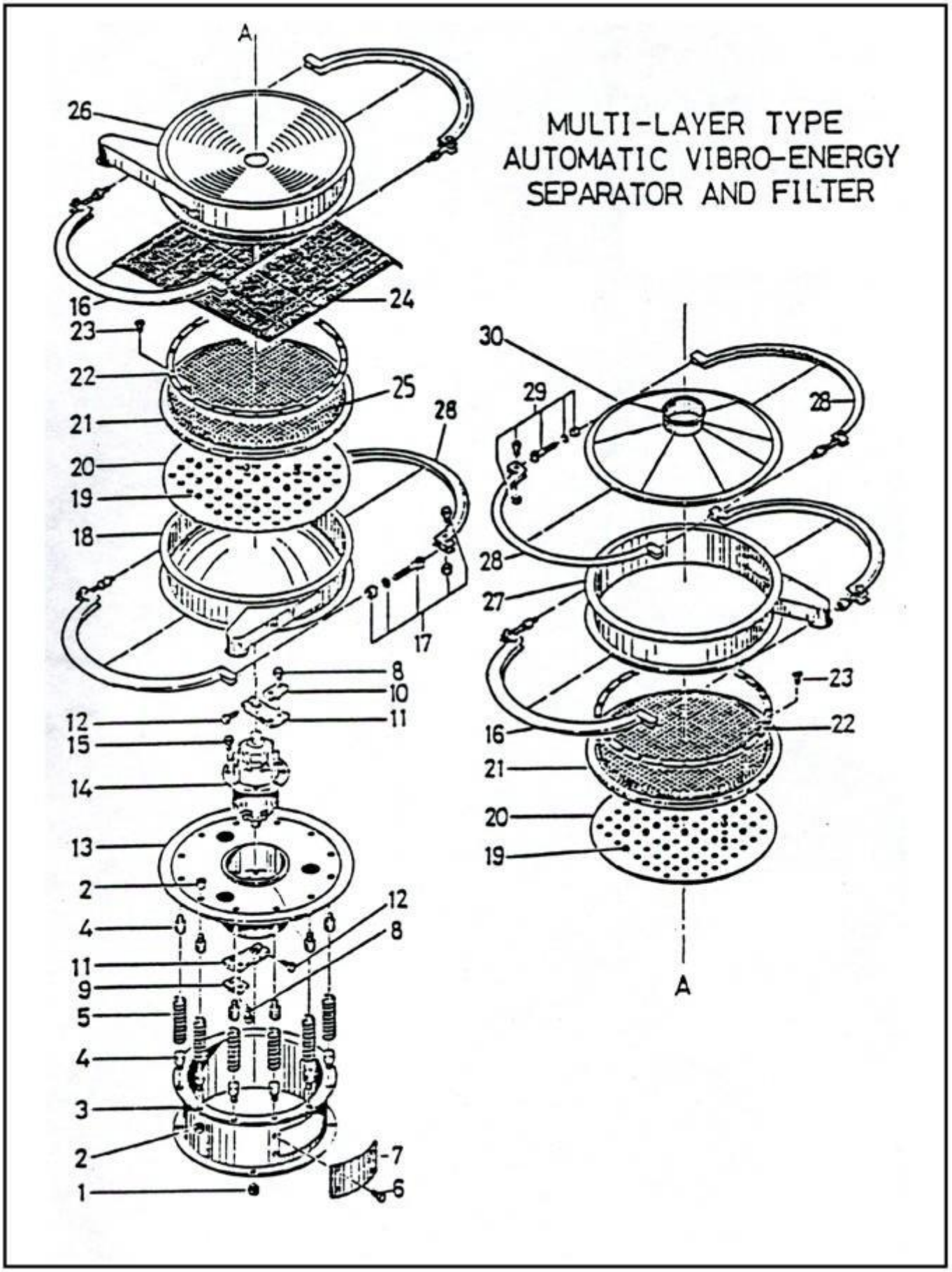
MULTI-LAYER TYPE
AUTOMATIC VIBRO-ENERGY
SEPARATOR AND FILTER
A
26
16
24
23
22
25
21
28
20
19
18
17
8
10
12
11
15
14
13
2
4
12
8
11
9
5
4
3
2
7
1
6
30
29
28
28
27
23
16
22
21
20
19
A

Flamingo	DESCRIPTIONS	PICTURE 1

1. RUBBER PAD
2. NUT
3. BASE
4. SPRING BOSS
5. SPRING
6. WINDOW BOLT
7. WINDOW
8. ADD'L WEIGHT PLATE BOLT
9. LOWER ADD'L WEIGHT PLATE
10. UPPER ADD'L WEIGHT PLATE
11. UPPER & LOWER ECCENTRIC WEIGHT
12. BOLT
13. VIBRO BODY
14. MOTOR
15. BOLT
16. BIG "V" CLAMP RING
17. CLAMP RING BOLTS SET
18. BOTTOM
19. TAPPING BALL
20. BALL CLEANING DECK
21. LOWER FLANGE
22. UPPER FLANGE
23. SCREW
24. SCREEN CLOTH
25. SUPPORTING SCREEN
26. MIDDLE FRAME
27. UPPER FRAME
28. SMALL "V" CLAMP RING
29. CLAMP RING BOLTS SET
30. DUST COVER

∗ P.S. PARTS NO.28 FOR THE REFERENCE OF LS-1200 & LS-1500 SERIES BOTH ARE BIG CLAMP RING SET INSTEAD OF SMALL CLAMP RING SET.

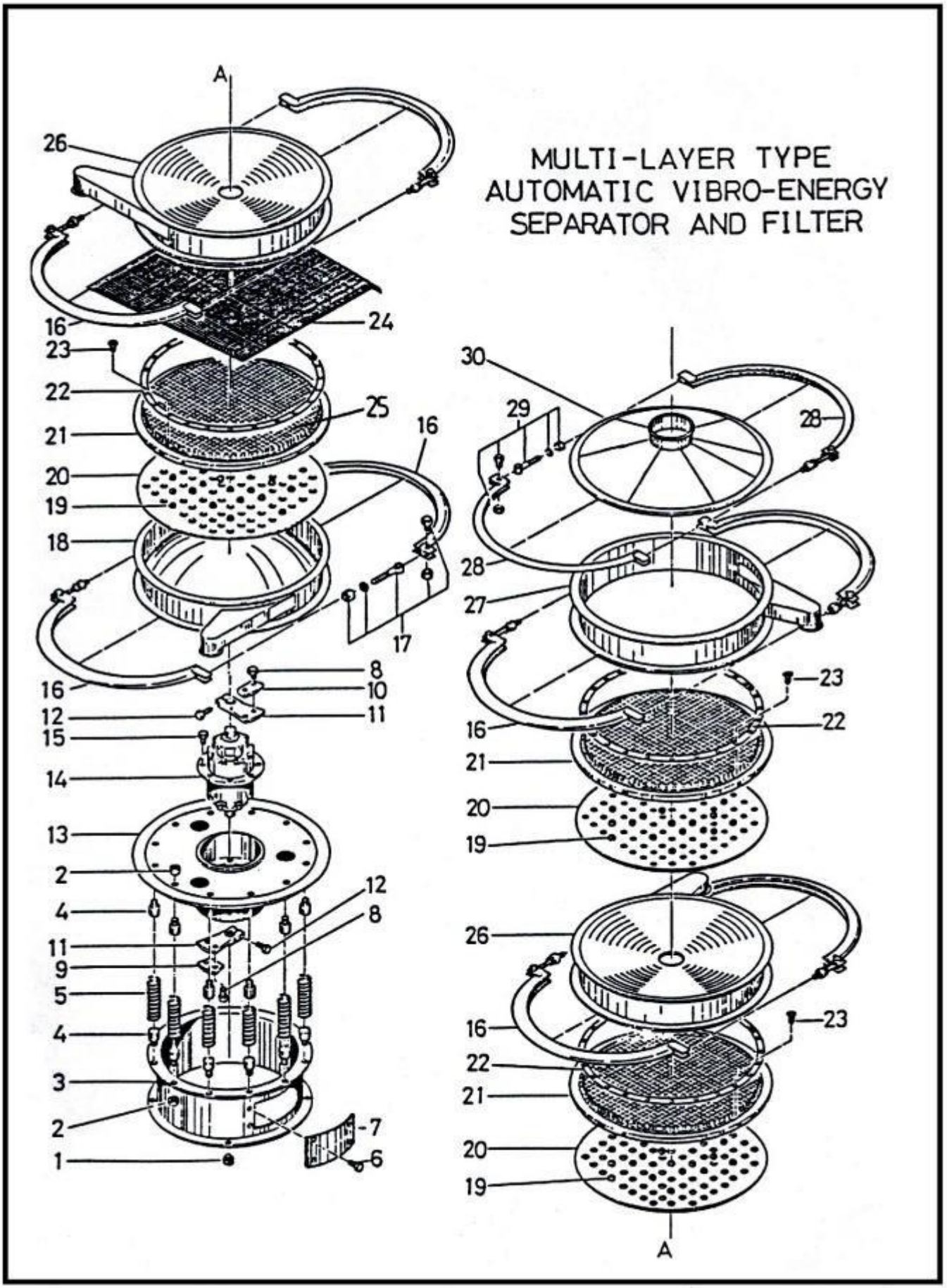
MULTI-LAYER TYPE
AUTOMATIC VIBRO-ENERGY
SEPARATOR AND FILTER
A
26
16
24
23
22
25
21
20
19
18
16
17
16
8
10
12
11
15
14
13
2
4
12
8
11
9
5
4
3
2
1
7
6
30
29
28
28
27
23
16
22
21
20
19
26
16
23
22
21
20
19
A

Flamingo	DESCRIPTIONS	PICTURE 1

1. RUBBER PAD
2. NUT
3. BASE
4. SPRING BOSS
5. SPRING
6. WINDOW BOLT
7. WINDOW
8. ADD'L WEIGHT PLATE BOLT
9. LOWER ADD'L WEIGHT PLATE
10. UPPER ADD'L WEIGHT PLATE
11. UPPER & LOWER ECCENTRIC WEIGHT
12. BOLT
13. VIBRO BODY
14. MOTOR
15. BOLT
16. BIG "V" CLAMP RING
17. CLAMP RING BOLTS SET
18. BOTTOM
19. TAPPING BALL
20. BALL CLEANING DECK
21. LOWER FLANGE
22. UPPER FLANGE
23. SCREW
24. SCREEN CLOTH
25. SUPPORTING SCREEN
26. MIDDLE FRAME
27. UPPER FRAME
28. SMALL "V" CLAMP RING
29. CLAMP RING BOLTS SET
30. DUST COVER

∗ P.S. PARTS NO.28 FOR THE REFERENCE OF LS-1200 & LS-1500 SERIES BOTH ARE BIG CLAMP RING SET INSTEAD OF SMALL CLAMP RING SET.

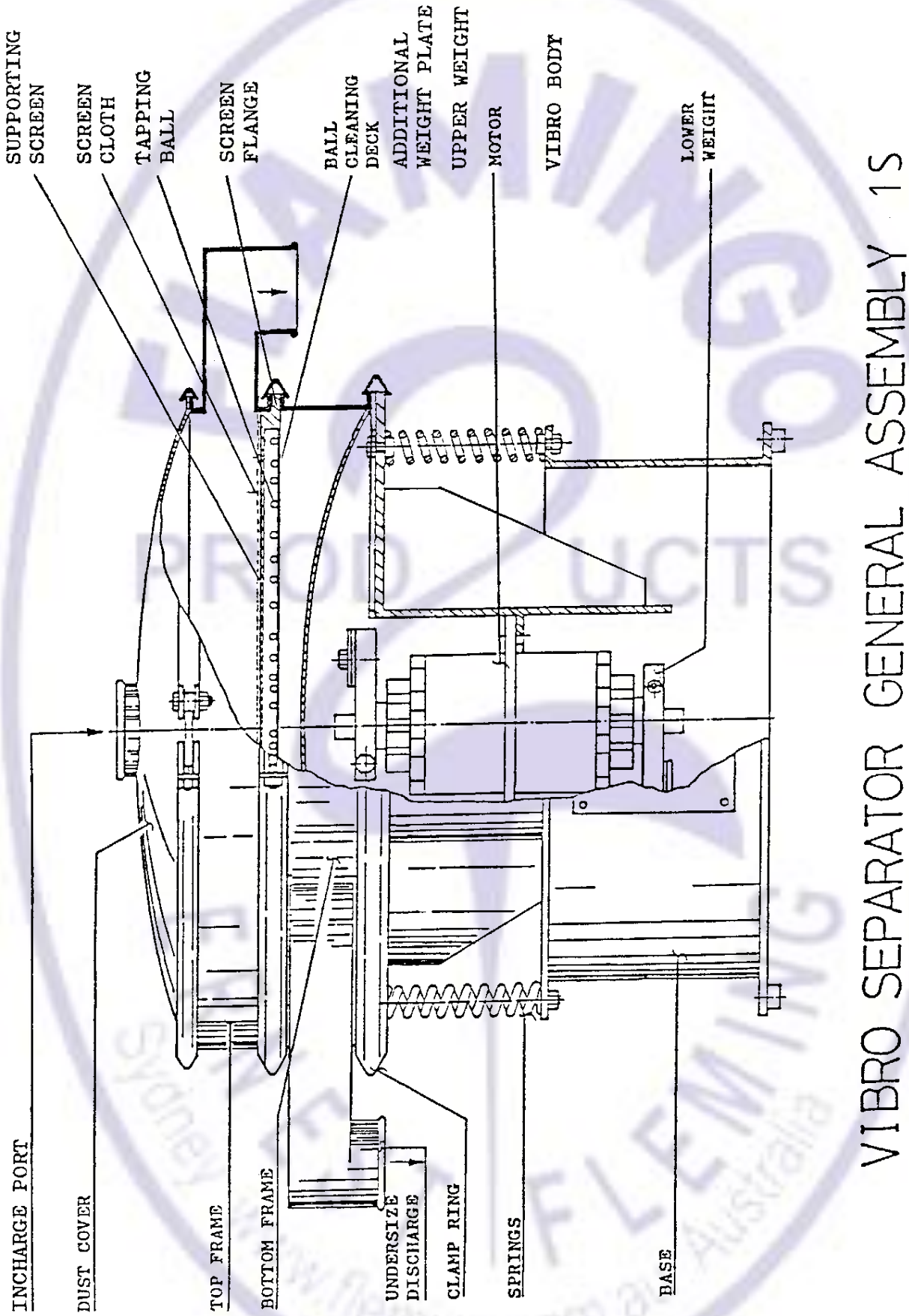

VIBRO SEPARATOR GENERAL ASSEMBLY 1S

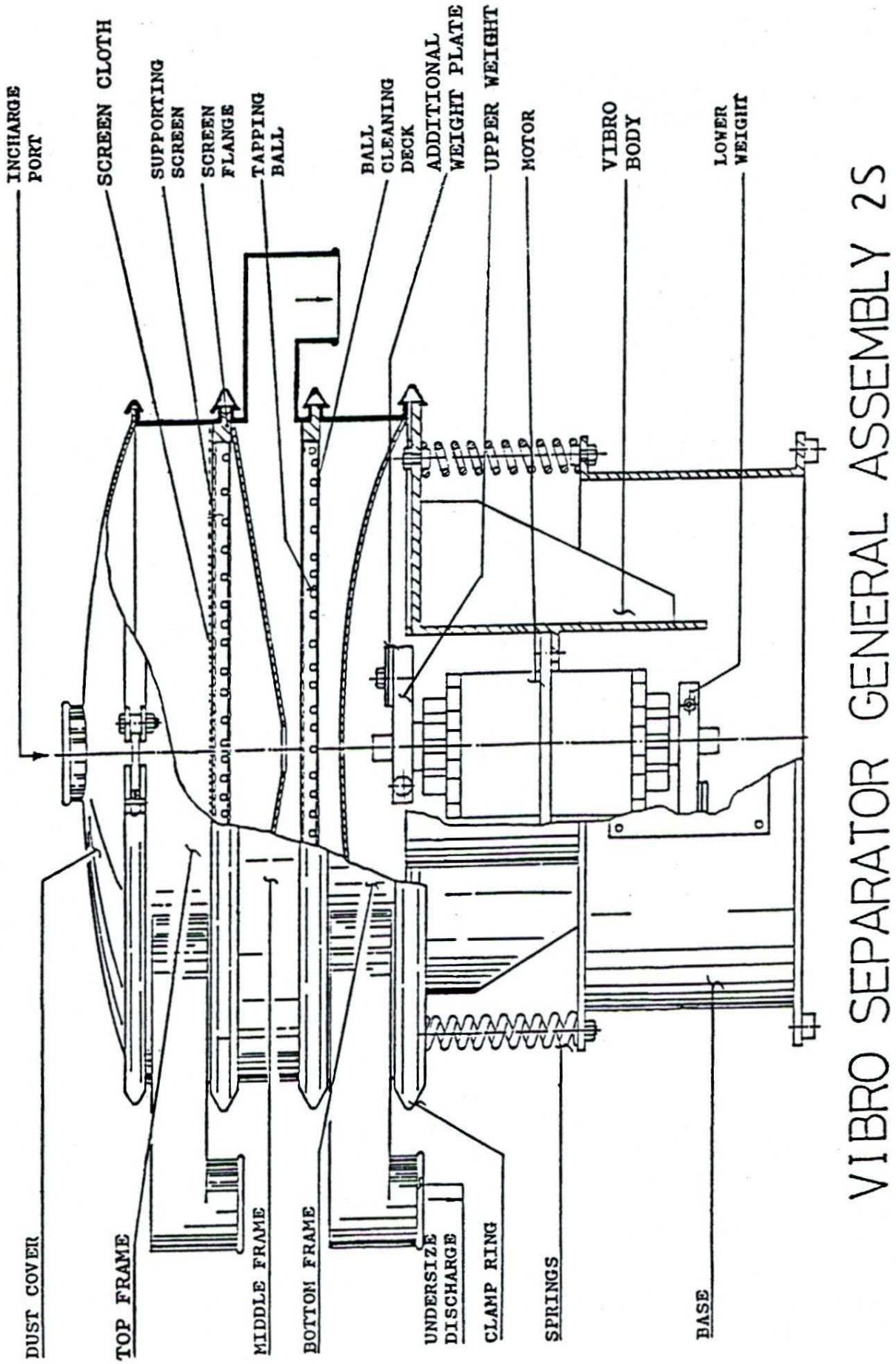

VIBRO SEPARATOR GENERAL ASSEMBLY 2S

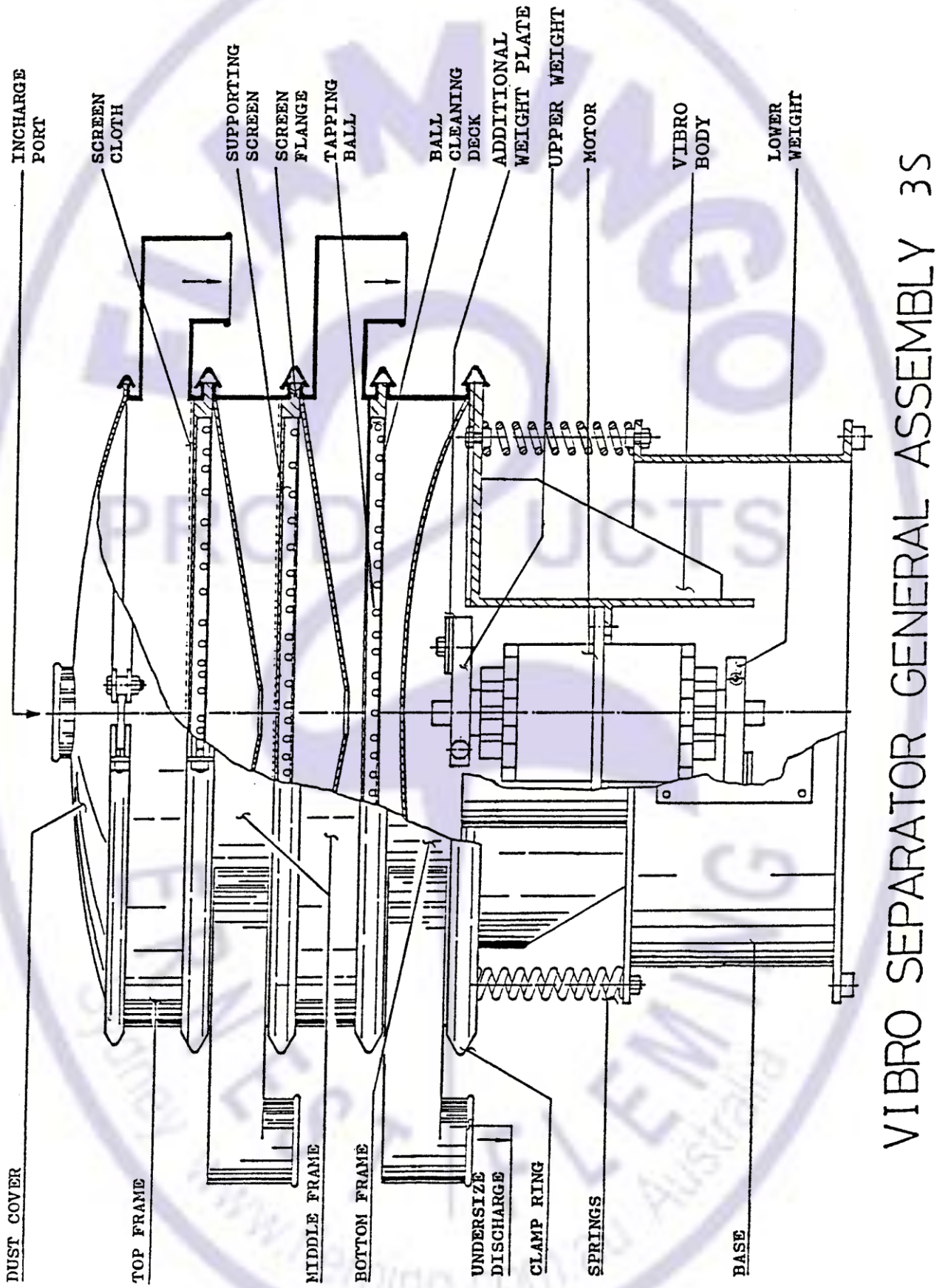

VIBRO SEPARATOR GENERAL ASSEMBLY 3S

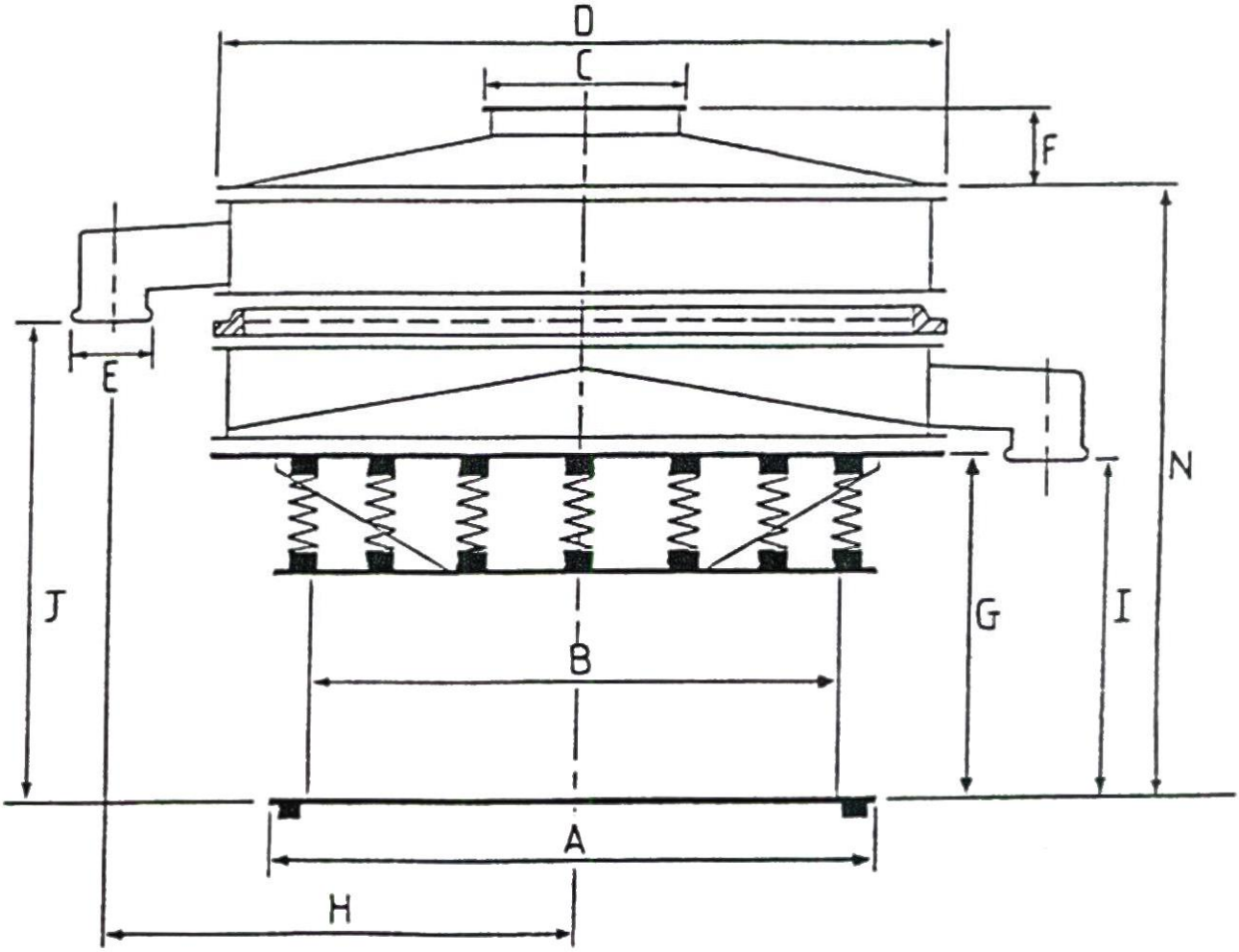

ONE LAYER SIEVE DIMENSIONS

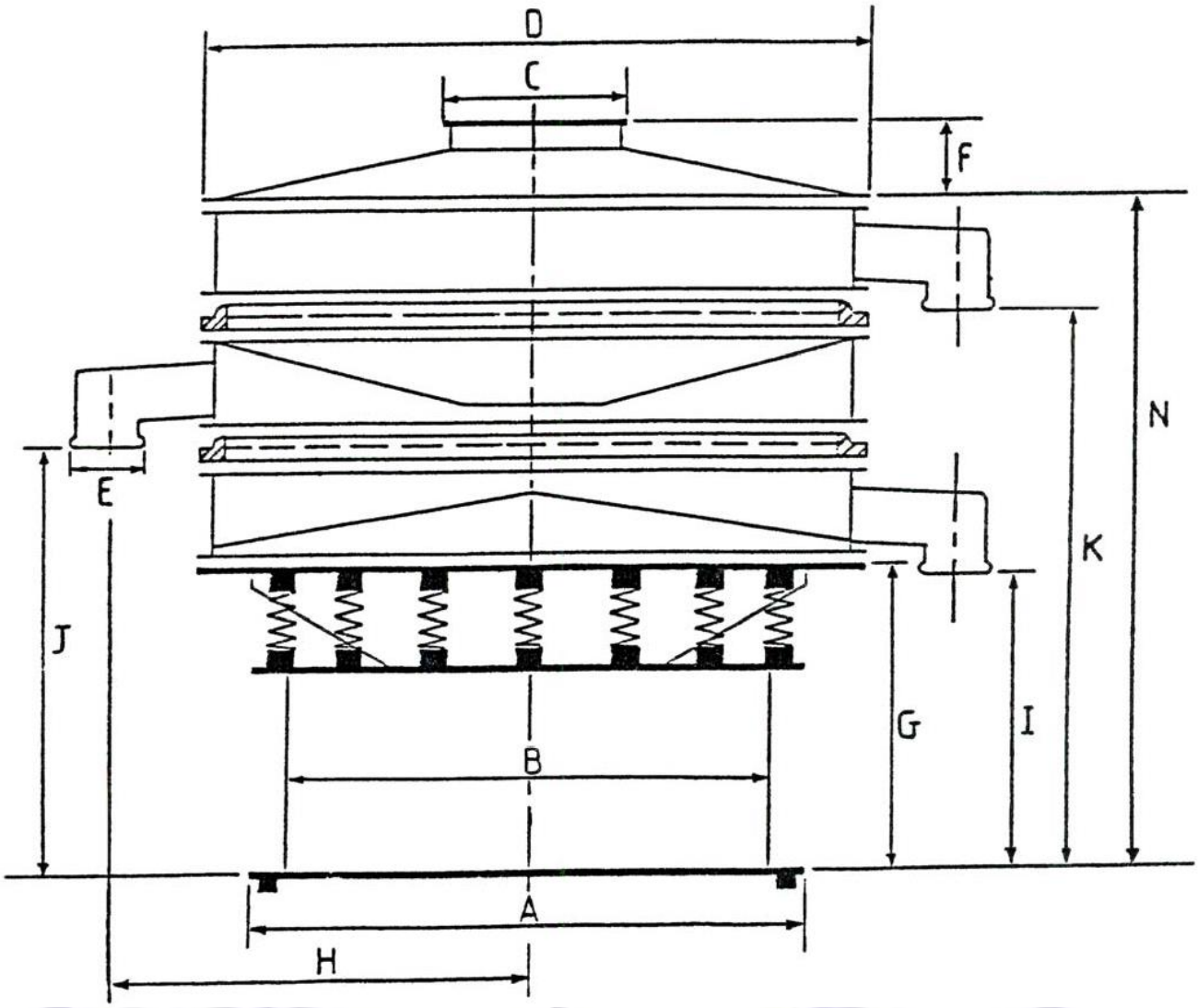

TWO LAYER SIEVE DIMENSIONS

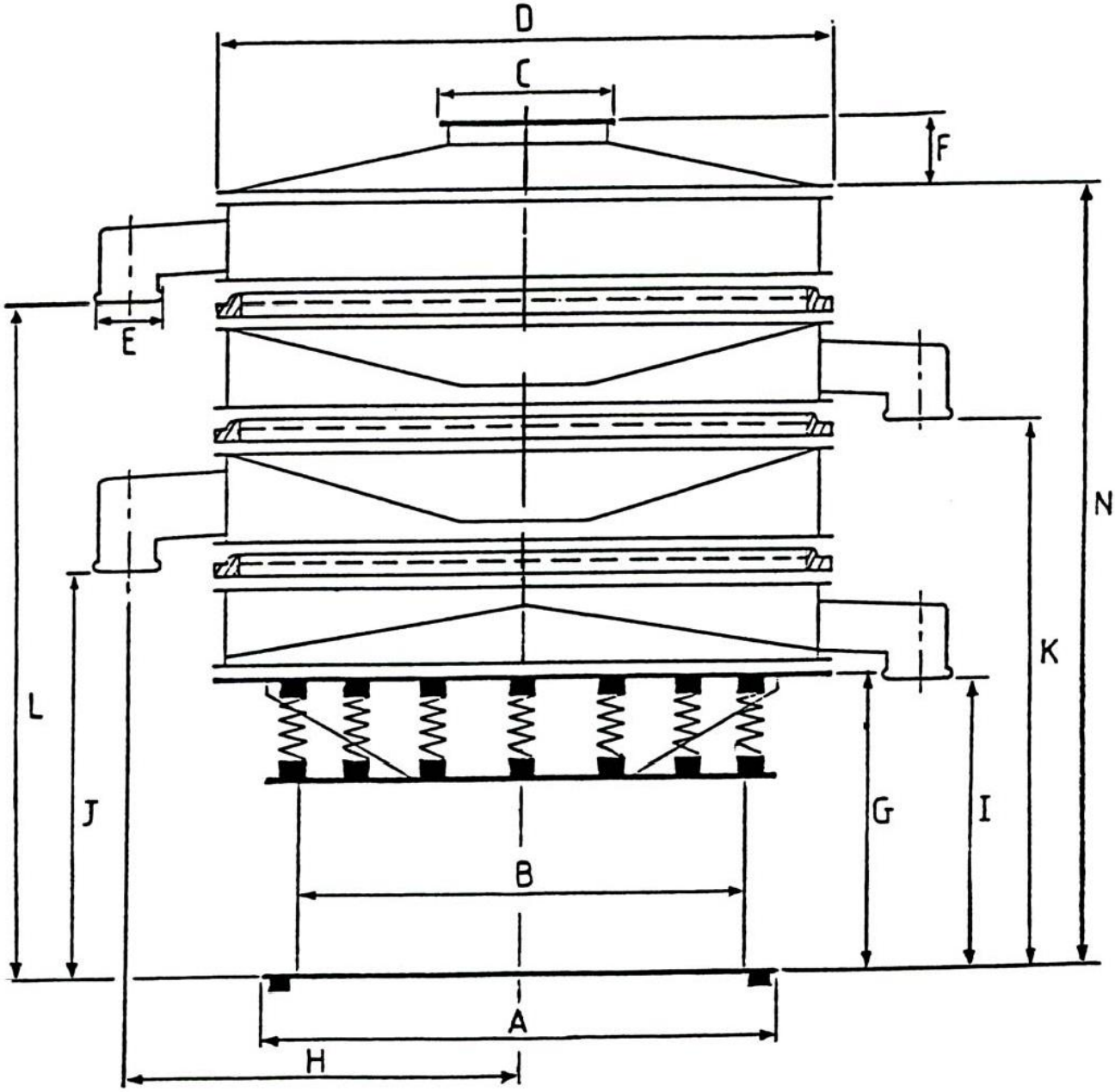

THREE LAYER SIEVE DIMENSIONS

STANDARD MODEL DIMENSIONS

UNIT: mm

MODEL	A	B	C	D	E	F	G	H	I	J	K	L	M	N
LS-500-1S	530	450	150	500	100	80	330	360	300	400				530
LS-500-2S	”	”	”	”	”	”	”	”	”	”	500			630
LS-500-3S	”	”	”	”	”	”	”	”	”	”	”	600		730
LS-800-1S	680	580	200	800	125	90	410	540	390	535				690
LS-800-2S	”	”	”	”	”	”	”	”	”	”	780			830
LS-800-3S	”	”	”	”	”	”	”	”	”	”	”	825		970
LS-1000-1S	800	700	250	970	150	100	460	643	435	575				860
LS-1000-2S	”	”	”	”	”	”	”	”	”	”	715			900
LS-1000-3S	”	”	”	”	”	”	”	”	”	”	”	855		1040
LS-1200-1S	985	855	250	1170	180	120	580	750	540	700				900
LS-1200-2S	”	”	”	”	”	”	”	”	”	”	860			1060
LS-1200-3S	”	”	”	”	”	”	”	”	”	”	”	1020		1220
LS-1500-1S	1190	1050	250	1470	200	120	580	930	570	760				960
LS-1500-2S	”	”	”	”	”	”	”	”	”	”	950			1160
LS-1500-3S	”	”	”	”	”	”	”	”	”	”	”	1140		1360

B. INSTALLATION, ADJUSTMENT AND OPERATION

1. Machine installation

This Vibro Separator is usually not needed do fix on the floor due to the excellent design, but special using purpose may cause the necessity to fix the Vibro Separator on the definite position , no matter where the Vibro Separator is, it must be situated on horizontal level , otherwise the efficiency of the Vibro Separator will be effected.

2. Pre-inspection before running the machine

- The Vibro Separator must be on the horizontal level.
- The Vibro Separator must be fixed steadily.
- The fine mesh screen cloth must be flatly laying against the supporting screen..
- The bolt nut on both sides of the couple of "V" clamp ring must be tightened.
- The gap between the feed pipe and screening surface must be reserved a sufficient space for the material discharging.
- The machine body may not be lean to against any foreign object.
- The electricity to be connected.

3. Inspection during the machine testing

- Any irregular noise from the Vibro Separator.
- The moving direction of the motor must be followed according to the symbol of the arrow.
- The amperage of the motor must be stable and normal , single phase running of the motor
  is prohibited.
- The fine screen cloth must be fixed tightly and not too loose.

4. Installation Start

When all inspections during the machine running mentioned in article 3 have been checked, spread small quantity of material intended to be screened in the center of the screen, adjust the machine depending on the direction , jumping angle , moving speed and the screening quantity.

- Install special plastic ring and tapping ball .
- Adjust the angle of lower weight.
- Increase the weight of upper weight.

5. Lower weight adjustment

Material Direction	phase	
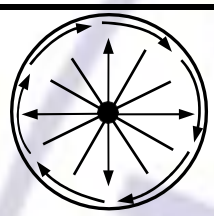	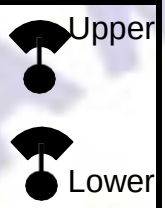	For the dry or easy screening materials, especially for grains classifying, the materials will throw straight across the screen from center.
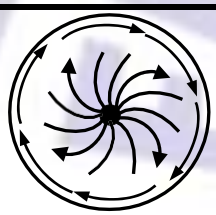	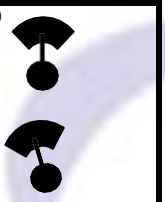	For ordinary screening, materials may start to spiral, suitable for powder sifting.
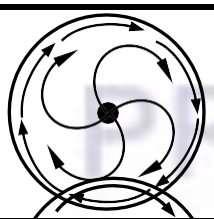	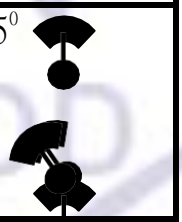	The longest tine for materials crossing the screen, suitable for high condensation or high moisture contented materials sifting.
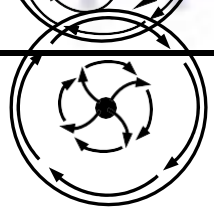		Materials started to stay onto the center, suitable for wet materials sifting
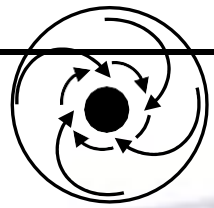	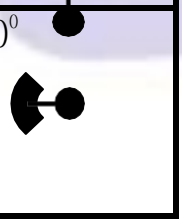	Suitable for liquid filtering, the oversize material will be gathering at the center, the powder material will be granulated into ball type.

By adjusting the phase angle of upper and lower weights to change the moving direction of material and prolong or shorten the time for the material to move across the screen cloth, better efficiency of screening can be reached. Basically, only the lower weight id adjusted and there is no need to adjust the upper weight.

For example, chart 2, when upper and lower angle is adjusted from zero to 15 degrees, lower weight was adjusted to be 15 degrees from upper weight according to the running direction of the motor.

6. Changing the screens

(1) Changing the screen cloth

The way to change the fine mesh screen cloth is very simple; it can be accomplished within five minutes according to the following process.

PIC. 1

PIC. 2

PIC. 3

PIC. 4

PIC. 5

- Loosen the screw nuts from the “V” clamp ring, take down the upper frame and the broken screen cloth and replace with new screen cloth.
- Put the fine mesh screen cloth on top of the supporting screen, replace the upper frame, tighten the fine mesh screen cloth around the frame with your hands, using clips to hold on upper frame and lower frame on both sides of the edges.
- Leave only 1.5Cm screen cloth stretch around the frame and cut out all unnecessary screen cloth.
- Pot on the “V” clamp rings and loose the clips, tighten the ring by butting back all the screws.
- Using a soft hammer to knock on the “V” clamp ring evenly around, tighten again the boll nut, Changing of the screen cloth is thus accomplished.
- If the tapping beck and the supporting screen were also taken down during screen cloth changing, be sure that the tapping deck was replaced exactly inside the convex edges of the supporting screen flange.

2) The method of changing support screen

If the support screen is damaged, it can be repair by yourselves also.

In case you can not re assemble the screen, we suggest that you send it back to our company or agent for repairing. You are suggested to have one more set of supporting screen as spare.

7. Trouble Shootings

Conditions	Inspection items	Solutions
1. Irregular motor rotation	(1) Check the power source	@ Thorn on the switch
	(2) The shortage of wire length cased the decommission	@ Change the lead
	(3) The wire was broken	@ Change the lead
	(4) Single phase rotation caused the motor damage.	@ Change the motor
	(5) Applied too much lubricant	@ Keep running the motor
2. Irregular noise	(1) "V" clamp ring not tighten	@ Tighten the bolt nut
	(2) "V" clamp ring not completely into edge.	@ Assist by the clip
	(3) Tapping deck not exactly located inside convex edge of the supporting screen	@ Replace again
	(4) Tapping beck damaged	@ Change the tapping deck
	(5) Base not stable	@ Fix the machine base
	(6) Spring broken	@ Change the new
	(7) Machine body contacted with other hard objects	@ Keep about 10cm distances
	(8) The bolt for tightening the motor was loosened	@ Exactly tighten again
	(9) The discharge port contacted wit other hard object	@ Separated them
3. Material con not automatically discharge	(1) Wrong motor rotation	@ Interchange any tow of the Main power leads
	(2) Angle between upper and lower weight is over	@ Adjust the angle within 90 degree
	(3) Wrong installation for upper and lower weight	@ The upper weight should heavier than the lower weight
4. The screen cloth broken easily	(1) Material crashed onto the screen cloth directly	@ Install a reducer
	(2) The screen cloth is not firmly contacted wit her supporting screen	@ Replace again according to the process
	(3) The supporting screen wad broken	@ Change the supporting screen
	(4) The rubber packing was damaged	@ Replace by the now one
5. The discharge port cracked	(1) The connector is too heavy	@ Separate them
	(2) The "V" clamp ring is not evenly tightened	@ Tighten the "V" clamp ring

C. MAINTENANCE

1. Daily Maintenance

1-1 Before Start:

* Check if screens are broken
* Check if each clamp is tightly locked

1-2 During Operation:

* Listen carefully if there is any unusual noise occurred.

1-3 After use:

* Clean up the machine every time after use

2. Regular Maintenance

* Regularly check the supporting screens & screen clothes.
* Check if spring or rubber gasket is fatigue or not.
* Check if any fracture occurred due to vibration.
* Regular lubrication is necessary.