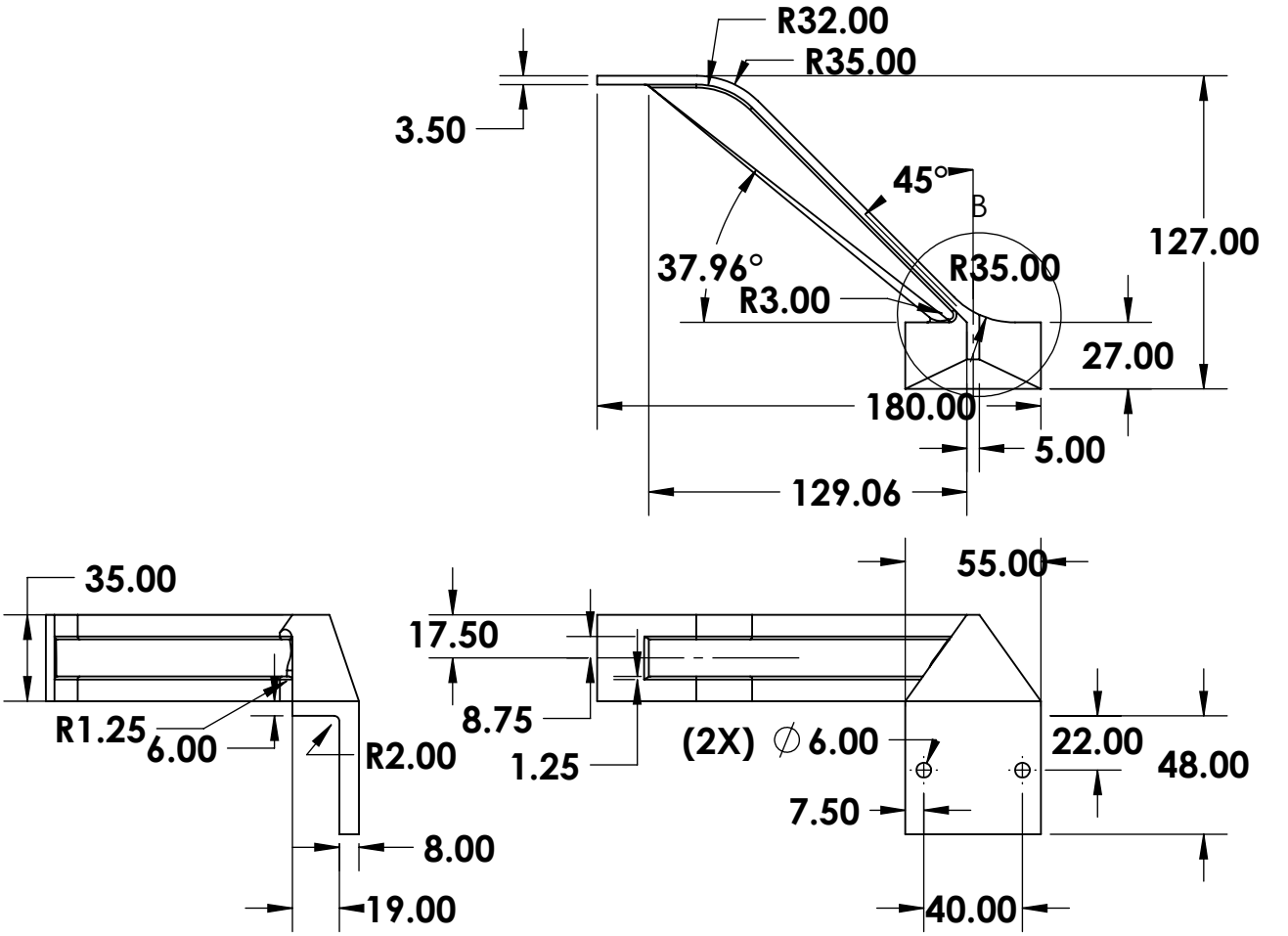

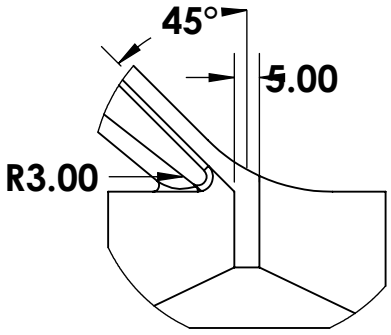

DETAIL B
SCALE 2 : 3

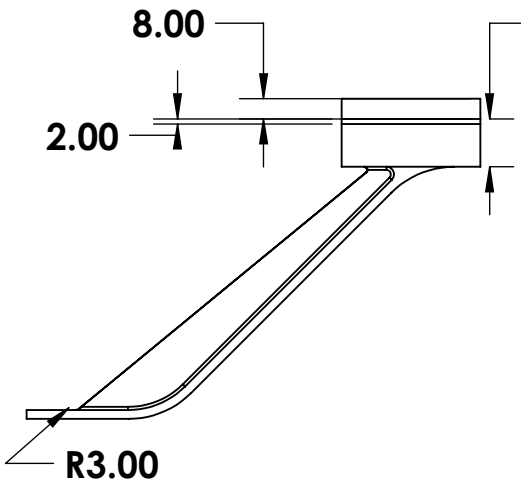

Scale: 1:3

UNLESS OTHERWISE SPECIFIED: DIMENSIONS ARE IN MILLIMETERS SURFACE FINISH: TOLERANCES: LINEAR: ANGULAR:		FINISH:		DEBURR AND BREAK SHARP EDGES		DO NOT SCALE DRAWING	REVISION
	NAME	SIGNATURE	DATE			TITLE:	
DRAWN	NSJ. Pendala					Left Aligner	
CHK'D							
APPV'D							
MFG							
Q.A				MATERIAL:		DWG NO. Thesis_02	A4
				WEIGHT:		SCALE: 1:3	SHEET 1 OF 1

SOLIDWORKS Educational Product. For Instructional Use Only.