PM SHRI KENDRIYA VIDYALAYA GACHIBOWLI,GPRA CAMPUS,HYD-32

PRACTICE PAPER 11 (2024-25)

CHAPTER 11 CHEMICAL EFFECTS OF ELECTRIC CURRENT

(ANSWERS)

SUBJECT: SCIENCE **MAX. MARKS : 40**

CLASS : VIII **DURATION : 1½ hr**

SECTION – A

Questions 1 to 6 carry 1 mark each.

1. Boojho and Paheli performed experiments taking similar bulbs and cells but two different solutions, A and B, as shown in below figure:

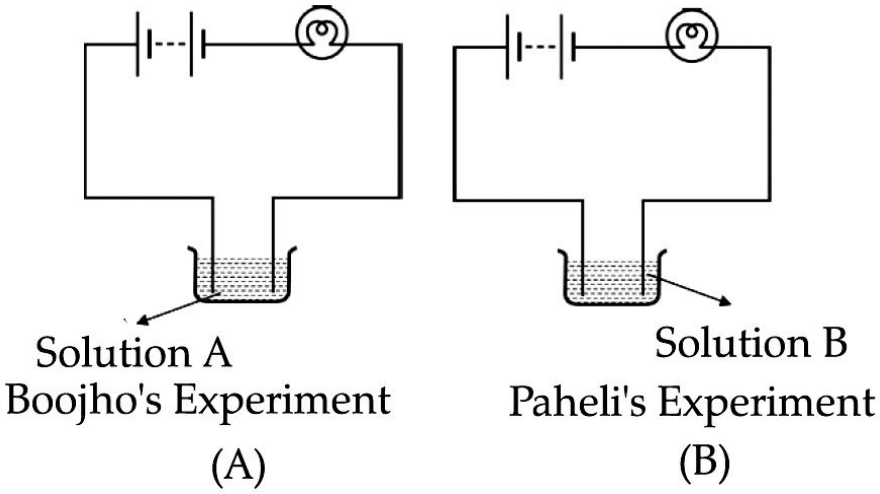

They found that the bulb in setup A glows more brightly as compared to that of setup B. You would conclude that

(a) higher current is flowing through the circuit in setup A.

(b) higher current is flowing through the circuit in setup B.

(c) equal current is flowing through both the circuits.

(d) the current flowing through the circuits in the two setups cannot be compared in this manner.

Ans. (a) higher current is flowing through the circuit in setup A.

Higher current is flowing through the circuit in setup A because solution A is a good conductor of electricity compared to solution B.

2. Which of the following solutions will not make the bulb in below figure glow?

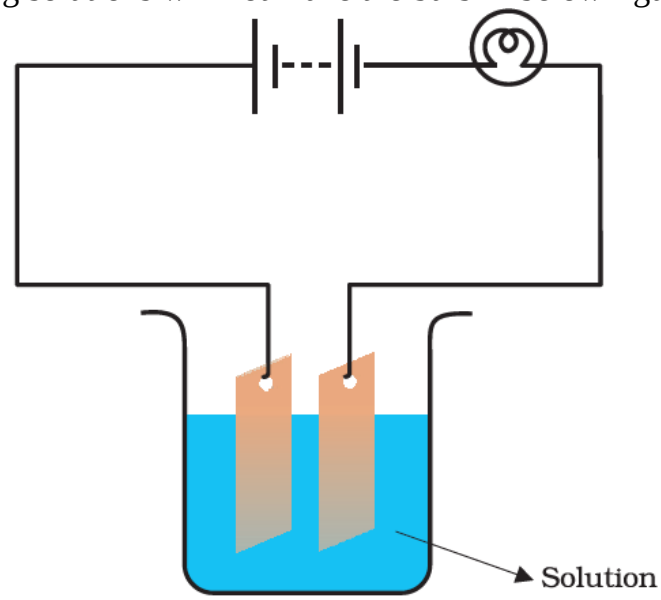

(a) sodium chlorides (b) copper sulphate
(c) silver nitrate (d) sugar solution in distilled water
Ans. (d) sugar solution in diluted water
The sugar solution is neither acidic nor basic and it cannot ionize to conduct electricity. Similarly, distilled water has no ions in it to conduct electricity. Hence the mixture of sugar solution and distilled water will not conduct electricity.

3. When an electric current is passed through a conducting solution, there is a change of colour of the solution. This indicates
(a) the chemical effect of current. (b) the heating effect of current.
(c) the magnetic effect of current. (d) the lightning effect of current.
Ans. (a) the chemical effect of current
Conducting a solution through electric current cause's chemical reaction. This causes a change in colour and this is the chemical effect of electric current.

4. An electric current can produce
(a) heating effect only. (b) chemical effect only.
(c) magnetic effect only. (d) chemical, heating, and magnetic effects.
Ans. (d) chemical, heating, and magnetic effects.
Electric current causes a chemical reaction when it passes through a conducting solution. This is a chemical effect of electric current.
When an electric current passes through the bulb. Its filament gets heated, and bulb starts glowing. This is the heating effect of electric current.
When an electric current is passed through a circuit it produces a magnetic field around it. This is the magnetic effect of electric current.

5. Which one of the following solutions will not conduct electricity?
(a) lemon juice (b) vinegar (c) tap water (d) vegetable oil
Ans. (d) vegetable oil
Vegetable oil does not contain ions hence it cannot conduct electricity.

6. In the below question, a statement of Assertion (A) is followed by a statement of Reason (R). Mark the correct choice as
Assertion (A): Distilled water do not conduct electricity. (Easy)
Reason (R): Glowing of a bulb is due to heating effect of electric current.
(a) Both assertion (A) and reason (R) are true and reason (R) is the correct explanation of assertion (A).
(b) Both assertion (A) and reason (R) are true but reason (R) is not the correct explanation of assertion (A)
(c) Assertion (A) is true but reason (R) is false.
(d) Assertion (A) is false but reason (R) is true.
Ans. (b) Both assertion (A) and reason (R) are true but reason (R) is not the correct explanation of assertion (A)
Distilled water as such do not conduct electricity, if salt is dissolved in it, it becomes a good electric conductor.

SECTION – B

Questions 7 to 10 carry 2 marks each.

7. Why does the bulb glow when an electric current passes through it?

Ans. Due to the heating effect of current, the filament of the bulb gets heated to a high temperature and it starts glowing. However, if the current passing through a circuit is too weak, the filament does not get heated sufficiently and it does not glow.

8. What effect does the current produce when it flows through a conducting solution? Explain using example.
Ans. An electric current through a conducting solution causes chemical reactions. For example, bubbles of a gas may be formed on the electrodes. Change of colour of solutions may occur. The reaction would depend on which solution and electrodes are used.

9. What is a tester?
Ans. The instrument which is used to check the flow of electric current is called tester. It is attached to the terminals of the electric circuit. If the bulb of tester glows, it confirms that current is flowing through the circuit.

10. Why it is dangerous for an electrician to repair an electric pole on roadside in heavy rainfall?
Ans. Rain water is a good conductor of electricity, electrician repairing electric pole in rains pose the risk of getting electric shock.

OR

Give reason: "Gas bubbles are seen near electrode when electrolysis is conducted."
Ans. Gas bubbles near electrodes is the result of chemical reaction in electrolyte solution due to electric current, that causes its decomposition. It usually take place in electrolysis of water, hydrogen and oxygen are dissociated and seen as gas bubbles near electrode.

SECTION – C

Questions 11 to 14 carry 3 marks each.

11. What is LED? Why is it most important source of light?
Ans. The device which is used in the tester in place of bulb is called LED. It glows even at very small current. There are two wires called leads attached to the LED. One lead is longer than the other. A long wire is connected with the positive terminal and shorter lead is connected to the negative terminal of battery.

12. (a) What are the three effects of electric current?
(b) What do you mean by magnetic effect of electricity?
Ans. (a) There are three effects of electric current—heating, magnetic and the chemical effect.
(b) When electric current is passed through a coil or wire, then it behaves like a magnet. This is called magnetic effect of current. The strength of magnetic field depends on the amount of current passing through a coil or wire. The coil or wire shows magnetism till current is passed.

13. Show that lemon juice and vinegar are good conductors of electricity.
Ans. Collect a few plastic or rubber caps of bottles. Pour one teaspoon of lemon juice or vinegar in one cap. Bring the tester over the cap and let the ends of the tester dip into lemon juice or vinegar. We see that bulb starts to glow. It indicates that lemon juice and vinegar are good conductors of electricity.

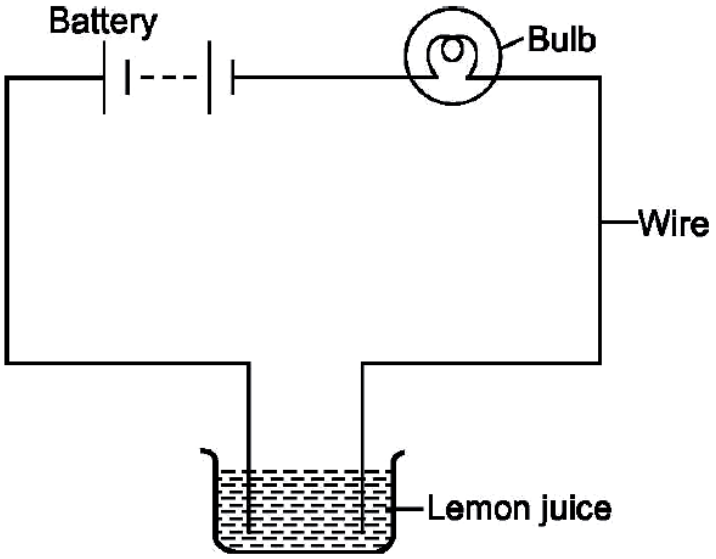

14. Boojho made the circuit shown in below figure. He wanted to observe what happens when an electric current is passed through water. But he forgot to add a few drops of lemon juice to water. Will it make any difference to his observations? Explain.

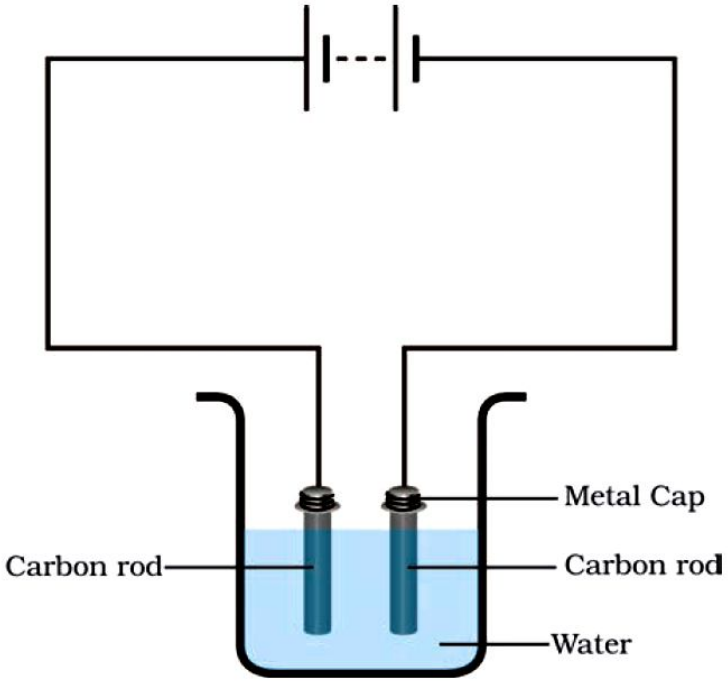

Ans. If the water is distilled water then without lemon juice it cannot conduct electricity and current will not pass through the circuit. If the water is salty then a feeble current will pass through circuits and bubbles will be observed on the negative electrode.

SECTION – D

Questions 15 to 16 carry 5 marks each.

15. What are the two methods of testing an insulator or a conductor?

Ans. The following two methods are used to test the conduction.

(i) We use an electric lamp to test conductivity. An electric lamp is attached to the electric circuit. If the substance allows the current to pass through it, the bulb will start glowing. Otherwise the bulb will not glow. This method does not work when current is very small. In such cases magnetic compass is used.

(ii) A magnetic tester is used to test conductivity when current is allowed to pass through it, it creates a magnetic field and the compass shows deflection. The deflection of compass shows that the current is passing through circuit.

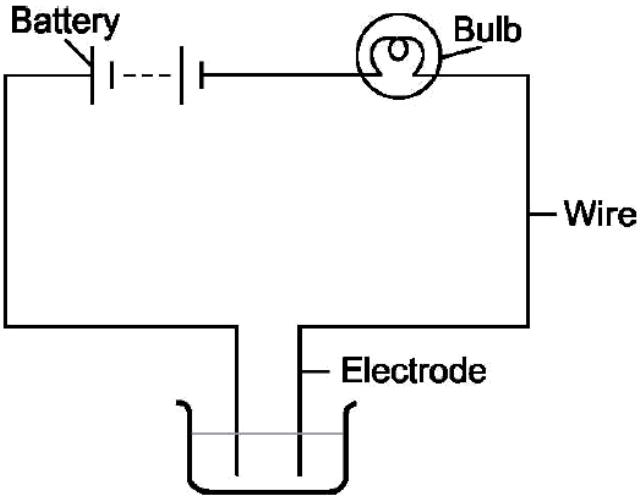

16. (a) Why do we need magnetic compass to test the conduction of electric current?
(b) The ordinary water can conduct electricity while distilled water does not. Explain why.
Ans. (a) Sometimes the bulb does not glow on passing electric current. This is because the electric current flowing through a conductor is so small, that the filament of the bulb does not get heated up to the temperature where it starts glowing. So, in case of small current we need magnetic compass to test the conduction.
(b) The water that we get from various sources like taps, hand pumps, wells and ponds is not pure. It may contain several salts dissolved in it. This water is thus good conductor of electricity. Distilled water is free of salts due to which it is a poor conductor.

OR

What do you mean by electroplating? How does it take place?
Ans. The process of coating a desired metal on other metal surface by using electric current is called electroplating.
A metal plate and the substance to be coated are dipped in a current conducting solution with conducting wires. The object to be coated is attached to the negative terminal.
When electric current is passed through the solution, the compounds of the conducting solution start breaking. The free metallic particles get deposited on the object at negative terminal of the battery. In this way we can get a coating of desired metal on any object by preparing suitable conducting solution and by using suitable electrodes.

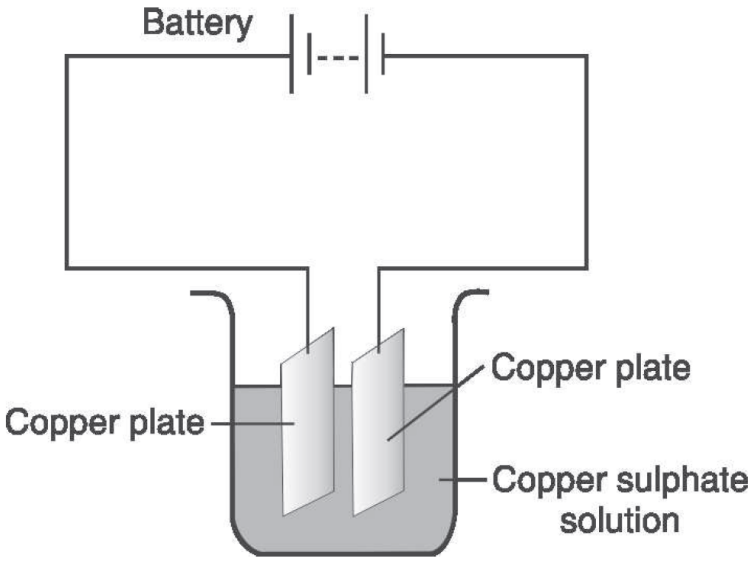

SECTION – E (Case Study Based Question)

Question 17 carry 4 mark

17. The materials, which allow electric current to pass through them, are good conductors of electricity. On the other hand, materials, which do not allow electric current to pass through them easily, are poor conductors of electricity.

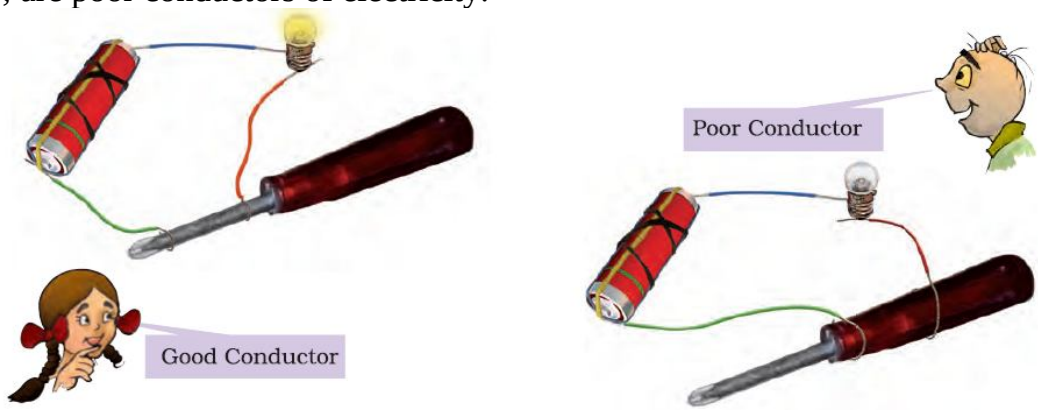

We found that metals such as copper and aluminum conduct electricity whereas materials such as rubber, plastic and wood do not conduct electricity. Due to the heating effect of current, the filament of the bulb gets heated to a high temperature and it starts glowing. However, if the current through a circuit is too weak, the filament does not get heated sufficiently and it does not glow. Even if the current is small, the deflection of the magnetic needle can be seen. Actually, under certain conditions most materials can conduct electricity. That is why it is preferable to classify materials as good conductors and poor conductors instead of classifying as conductors and insulators.

(a) What are good conductor? (2)

(b) Why do copper and aluminum conduct electricity while rubber and wood not? (2)

OR

Why filament of the bulb gets heated to a high temperature and starts glowing?

Ans. (a) The materials, which allow electric current to pass through them, are called good conductors of electricity

(b) Copper and aluminum are good conductors of electricity while rubber and wood are not good conductor of electricity.

OR

Due to the heating effect of current, the filament of the bulb gets heated to a high temperature and it starts glowing.