CHAPTER 1

INTRODUCTION

A door is one of the first defense features to maintain the physical security of the house. If the door of the house can be opened easily, a thief can easily enter and steal the contents of the house. At first, a door only incorporates a physical key to lock or unlock the door but then, with the advancement of technology, a more modern door has been innovated, namely the digital door that can lock or unlock doors without requiring a physical key. However, the digital door can also be broken or damaged when the house is empty, and the occupants of the house will only find out when arriving at home. To always maintain the security of the house, the house occupants will always have the door locked either when going out from home, or when resting in the house.

However, sometimes the house occupants forget to lock the door due to hurry when leaving the house, or they may doubt whether they have locked the door or not. This is one factor that can be a threat to home security. Internet of Things (IOT) is a structure in which objects and people are provided with exclusive identity and the ability to relocate data over a network without requiring two-way handshaking between human-to-human i.e. source to destination or human-to-computer interaction IOT utilizes the ability of sensors such as infrared sensors (IR) to detect a movement, a magnetic sensor that can be used to detect whether a door is open or closed, and an internal touch sensor to detect whether the sensor is being touched or not.

This Face detection are utilized in smartphones in past few years. It's a cool technology where we will unlock mobile phones or access any application that needs high security. With ESP-32 CAM, we will try to develop an easy project that uses our face as ID. As ESP32 board comes with Camera Web Server example code that used for video stream and face detection. During this ESP-32 cam project, we've made Face Detection Door Lock System using ESP32-CAM. When smart lock detects any enrolled face, it automatically works. So, this is often an easy but very useful home automation project using ESP-32 CAM module.

Information gathered from the face helps people understand others identities. During this

face detection approach, a given face is necessarily compared with the authorized faces to spot the right person. Within the field of bioscience, face recognition technology is one of thefastest-growing fields. The necessity of face recognition in security systems is attributed to the increase of economic interest and thus the event of feasible technologies to support the event of face recognition.

Todays all concerned about security, it maybe data security or the security of our residence. Smart door lock grown good in recent few years after the adoption of IOT on smart home projects. A smart door lock does not require any physical movement to open or close the door as it contains a digital door lock for this purpose. For home security, cameras play wide roles also and that's why we use ESP32-cam. The ESP32-cam is low in budget module with micro SD port for storing media data. It also has an in board Wi-Fi module for connectivity purpose. It also contains a camera for monitoring purposed by which we can look who is on the door without going near to the door physically, we can use this for live monitoring purpose and also can store the data recorded o the memory card for later uses. This project uses Internet of Things (IOT) and ESP module for monitoring purpose and Arduino and Bluetooth module for the door lock/unlock mechanism. It can be operation from both Android and IOS system.

1.1 PROJECT OBJECTIVES:

The goal of this project is to research and analyze a suitable collection of components for developing a smart door lock using Arduino that provides excellent security and quick access. The following are the specific projects goals:

- Familiarity with a smart door locking system based on a microcontroller.
- Using Arduino to create a simple and smart door locking system.

"Facial Detection and Facial Recognition using Intel's open source Computer Vision Library (OpenCV) and Python dependency".There are various scripts illustrated throughout the project that will have functionalities like detecting faces in static images, detecting faces in live feed using a webcam, capturing face images and storing them in the dataset, training of classifier for recognition and finally recognition of the trained faces.

Face Recognition can be of importance in terms of security, organization, marketing,

surveillance and robotics etc.Face detection is able to very immensely improve surveillance efforts which can greatly help in tracking down of people with ill criminal record basically referring to criminals and terrorists who might be a vast threat to the security of the nation and the people collectively.

A door is one of the first defense features to maintain the physical security of the house. If the door of the house can be opened easily, a thief can easily enter and steal the contents of the house. At first, a door only incorporates a physical key to lock or unlock the door but then, with the advancement of technology, a more modern door has been innovated, namely the digital door that can lock or unlock doors without requiring a physical key. However, the digital door can also be broken or damaged when the house is empty, and the occupants of the house will only find out when arriving at home. To always maintain the security of the house, the house occupants will always have the door locked either when going out from home, or when resting in the house.

However, sometimes the house occupants forget to lock the door due to hurry when leaving the house, or they may doubt whether they have locked the door or not. This is one factor that can be a threat to home security. Internet of Things (IOT) is a structure in which objects and people are provided with exclusive identity and the ability to relocate data over a network without requiring two-way handshaking between human-to-human i.e. source to destination or human-to-computer interaction IOT utilizes the ability of sensors such as infrared sensors (IR) to detect a movement, a magnetic sensor that can be used to detect whether a door is open or closed, and an internal touch sensor to detect whether the sensor is being touched or not.

CHAPTER-2

LITERATURE SURVEY

2.1 LITERATURE REVIEW

A) "Motion Sensing and Image Capturing Based Smart System on Android Platform"

Smart locks were previously utilized to improve the security aspects of the home. Because security isprovided by the door itself, the proposed approach can eliminate the concept of a door lock mechanism. When someone walks in front of the door, a motion is triggered, the image is captured, and the owner is notified. In this system, a mobile phone is linked to the door, and the owner is notified whenever someone comes to his house. By glancing at thephotographs, the owner of the house can send an open door signal to only trustworthy visitors. During the implementation of this project, a smart phone was used. If the owner is busy and someone knocks on the door, the owner receives a notification but is unable to respond, an issue arises.

B) "Design and Implementation of AutomatedDoor Accessing System with Face Recognition".

Biometrics is a type of analysis that is specific to human comprehension. Facial recognition is one of the most widely used forms of facial recognition technologies, with finger skills. one is called certification and the and the is called valid. Understanding the face mains telling structure of whose, or perhaps it is , the image of the face . Face recognition means that the system will tell you the truth and lies about the assumption given to the facial image and the detection assumption. So far, many sources have come out of non-renewable sources, During the implementation of this project, a smart phone was used. If the owner is busy and someone knocks on the door, the owner receives a notification but is unable to respond, an issue arises.

C) "Development of Intelligent Door Locking System on Face Recognition Technology".

This paper describes a low-cost smart door locking system that uses facial recognition technology to make decisions. The system is controlled by an Arduino UNO and an Android-based smartphone. It can handle all aspects of facial recognition on its own, including face detection, feature extraction, and face recognition using open CV libraries. The systemisn't a fully

automated security system. It does, however, provide a more comfortable means of accessing the facilities. The user does not need to do anything because the camera searches for the registered faces in real time. is project is It is more expensive since it employs additional door locking and unlocking techniques. It makes use of a facial recognition system. It also uses an electromechanical locker system.

D) "Motion Sensing and Image Capturing Based Smart System on Android Platform"

Smart locks were previously utilized to improve the security aspects of the home. Because security isprovided by the door itself, the proposed approach can eliminate the concept of a door lock mechanism. When someone walks in front of the door, a motion is triggered, the image is captured, and the owner is notified.

In this system, a mobile phone is linked to the door, and the owner is notified whenever someone comes to his house. By glancing at thephotographs, the owner of the house can send an open door signal to only trustworthy visitors. During the implementation of this project, a smart phone was used.

E) "Design and Implementation of AutomatedDoor Accessing System with Face Recognition".

Biometrics is a type of analysis that is specific to human comprehension. Facial recognition is one of the most widely used forms of facial recognition technologies, with finger skills. one is called certification and the and the is called valid. Understanding the face mains telling structure of whose, or perhaps it is , the image of the face .

Face recognition means that the system will tell you the truth and lies about the assumption given to the facial image and the detection assumption. So far, many sources have come out of non-renewable sources, During the implementation of this project, a smart phone was used. If the owner is busy and someone knocks on the door, the owner receives a notification but is unable to respond, an issue arises.

2.2 EXISTING SYSTEM:

Biometric door locking system

If you use a typical key-based system, you'll either have to travel to a key-cutting shop and receive actual keys for the authorized persons, or you'll have to hide your key outside where anyone may find it. Ifthere is electronic lock code cracking, some of it is done by those who are the most knowledgeable. If your password is critical, it is recommended that you choose a random password to increase your security because it is easier to guess the number at important dates. If you don't know what the benefits and drawbacks of getting a biometric entry door lock are, fingerprint scan door locks require electricity to operate, and a power outage might render them completely worthless. The Internet of Things (IOT) has ushered in significant progress in the realm of home automation. Many items can be operated using a passive approach that detects the individual's infrared signal and is quite inexpensive.

Other automatic smart door systems exist, however they are only focused on signal creation and processing. Some smart doors have their own remotecontrol that may be used to operate them. This strategy, however, has a number of flaws. The entire system becomes inaccessible if the remote is last or damaged.

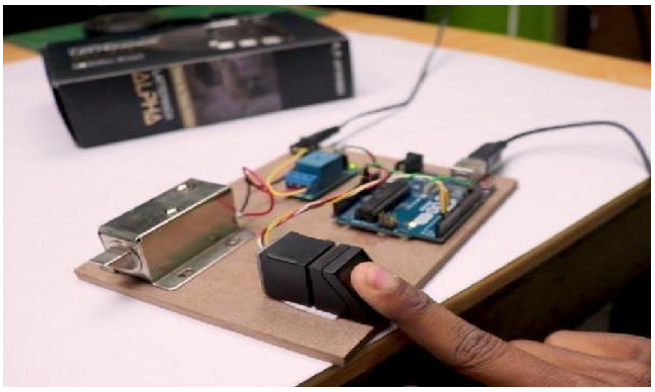

Fig-2.1: Fingerprint Door lock system

2.3 PROPOSED SYSTEM:

IOT based Door Control Using Face Detection System

We're working on an IOT solution that will allow us tooperate doors using facial recognition. Let's take a look at how it works: Using a face-to-face system, manage IOT capabilities. We're working on a technology called IOT function that allows you to control the gateway from the exit screen. Let's take a look at how it works: We're working on an IOT-based portal entry system named "IOT-based gateway system employing face recognition." The smart door system needs to be redesigned for some test questions. For some test problems, the smart door system needs to be changed.

It provides a methodology for making complex building connections that includes the deployment of equipment, software, and tablets. Unlike runners, this frame contains a shot to determine who is attempting to enter the sand while being considerate to the owner. Images are saved in the cloud and can be accessed at any time. The information you'll need later is saved in the cloud this way. This system has the advantage of aneasy-to-use ESP32 battery with doors and knobs. Due to communication challenges, these services need the creation of distinct applications in smart gate systems. We sell computer hardware that includes complex compilation systems, as well as systems that incorporate hardware, computer control, and computer hardware. These images, unlike backpackers, include a photo booth to separate persons. People break into homes and attempt to look after their occupants.

2.4 Mechanisms of human facial recognition

Basically what we see in this paper is that it presents an extension and a new way of perception of the author's theory for human visual information processing, which The method includes extracting a second sub-image from the second image, where the second sub-image includes a representation of the at least one corresponding facial landmark. “In turn detecting a facial gesture by determining whether a sufficient difference exists between the second sub-image and first sub-image to indicate the facial gesture, and determining, based on detecting the facial gesture, whether to deny authentication to the user with respect to the human recognition system

and same was applied".Several indispensable techniques are implicated: encoding of visible photographs into neural patterns, detection of easy facial features, measurement standardization, discount of the neural patterns in dimensionality.

"The logical (computational) role suggested for the primary visual cortex has several components: size standardization, size reduction, and object extraction". "The result of processing by the primary visual cortex, it is suggested, is a neural encoding of the visual pattern at a size suitable for storage. "(In this context, object extraction is the isolation of regions in the visual field having the same color, texture, or spatial extent.)"It is shown in detail how the topology of the mapping from retina to cortex, the connections between retina, lateral geniculate bodies and primary visual cortex, and the local structure of the cortex itself may combine to encode the visual patterns. Aspects of this theory are illustrated graphically with human faces as the primary stimulus. However, the theory is not limited to facial recognition but pertains to Gestalt recognition of any class of familiar objects or scenes.

After a face has been detected, it must be measured in a way that allows for accurate, efficient identification. The measurement process must not be so coarse as to miss the subtle features that distinguish one face from another. On the other hand, it must output a set of values that can be efficiently compared to stored templates for identification. There is a zero sum game between measurement and categorization: the more efficient the measurement, the easier the classification; conversely, less efficient measurement (e.g., a brute force tabulation of pixel gray values), makes the classification process more laborious.

After a face has been detected, it must be measured in a way that allows for accurate, efficient identification. The measurement process must not be so coarse as to miss the subtle features that distinguish one face from another. On the other hand, it must output a set of values that can be efficiently compared with stored templates for identification. There is a zerosum game between measurement and categorization: The more efficient the measurement, the easier the classification; conversely, less efficient measurement (e.g., a brute force tabulation of pixel gray values) makes the classification process more laborious.

CHAPTER 3

FACE RECOGNITION BASED DOOR LOCK SYSTEM USING MACHINE LEARNING AND IMAGE PROCESSING

3.1 INTRODUCTION TO PROPOSED SYSTEM

IOT based Door Control Using Face Detection System

We're working on an IOT solution that will allow us to operate doors using facial recognition. Let's take a look at how it works: Using a face-to-face system, manage IOT capabilities. We're working on a technology called IOT function that allows you to control the gateway from the exit screen. Let's take a look at how it works: We're working on an IOT-based portal entry system named "IOT-based gateway system employing face recognition." The smart door system needs to be redesigned for some test questions. For some test problems, the smart door system needs to be changed. It provides a methodology for making complex building connections that includes the deployment of equipment, software, and tablets.

Unlike runners, this frame contains a shot to determine who is attempting to enter the sand while being considerate to the owner. Images are saved in the cloud and can be accessed at any time. The information you'll need later is saved in the cloud this way. This system has the advantage of an easy-to-use ESP32 battery with doors and knobs. Due to communication challenges, these services need the creation of distinct applications in smart gate systems. We sell computer hardware that includes complex compilation systems, as well as systems that incorporate hardware, computer control, and computer hardware

Relevant data is kept in the cloud in this manner for future study. The main goal is to make a map of all the doors.and put the phone away When you make a call between phones, the panel sends you an SMS. This is an IOT-based gateway control system for any operation that uses a facial recognition system if a visitor finds the host and its surroundings.

3.2 FLOW CHART

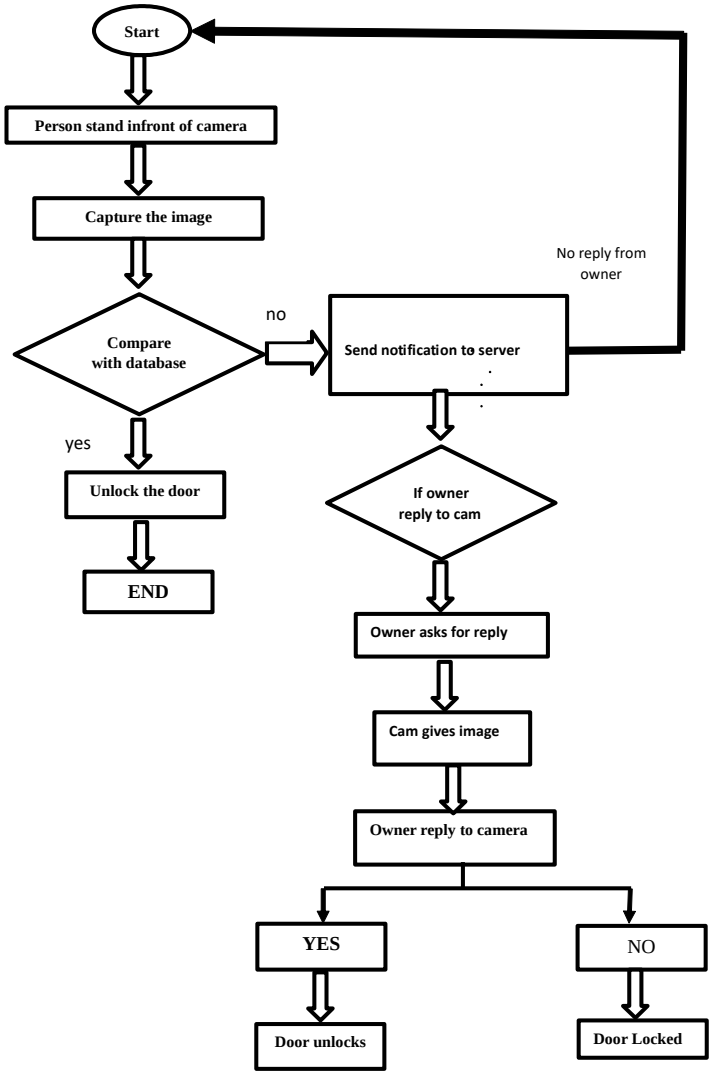

Fig 3.1: Flow chart of Door Control Using Face Detection system

3.3 BLOCK DIAGRAM

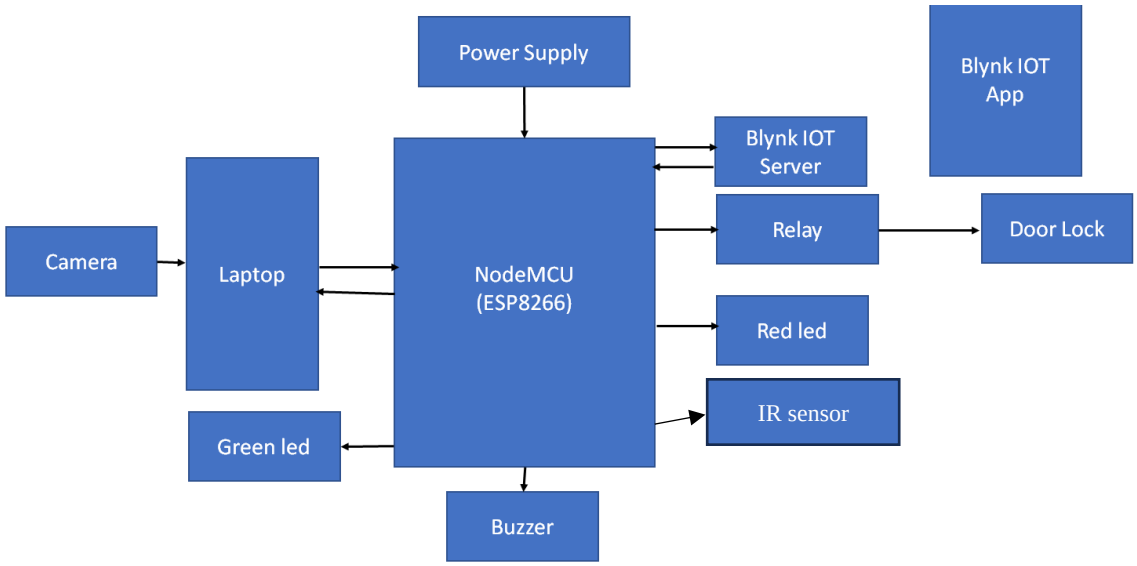

Fig-3.2: Block diagram of Face detection based Automatic door opening and closing

3.4 SCHEMATIC DIAGRAM

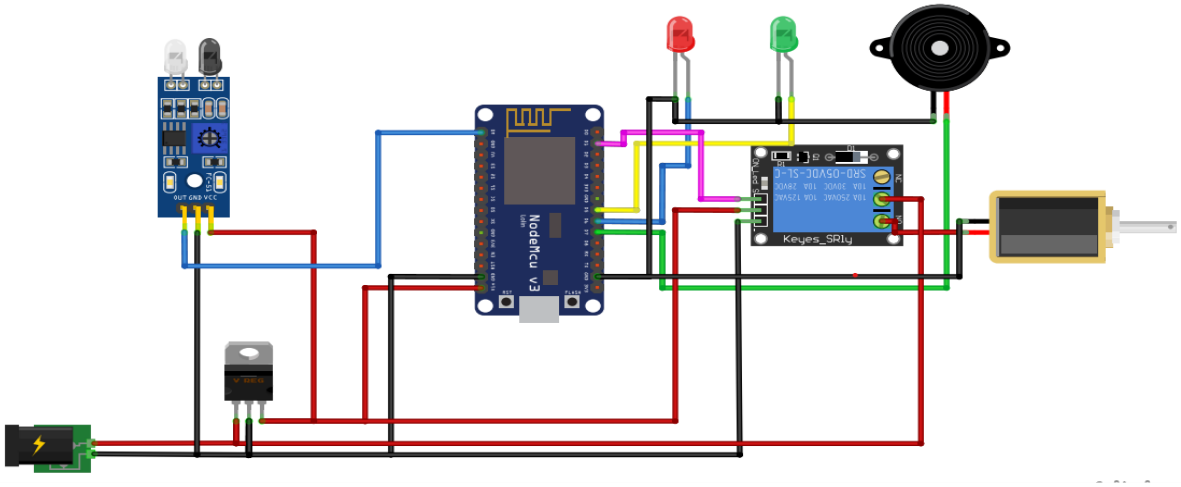

Fig 3.3 schematic diagram

3.5 WORKING TECHNOLOGY

A facial recognition system is a technology capable of matching a human face from a digital image or a video frame against a database of faces. Such a system is typically employed to authenticate users through ID verification services, and works by pinpointing and measuring facial features from a given image.

Facial recognition is a category of biometric security. Other forms of biometric software include voice recognition, fingerprint recognition, and eye retina or iris recognition. The technology is mostly used for security and law enforcement, though there is increasing interest in other areas of use.

3.5.1 FACE RECOGNITION WORKING:

Many people are familiar with face recognition technology through the FaceID used to unlock. Typically, facial recognition does not rely on a massive database of photos to determine an individual's identity — it simply identifies and recognizes one person as the sole owner of the device, while limiting access to others.

Beyond unlocking phones, facial recognition works by matching the faces of people walking past special cameras, to images of people on a watch list. The watch lists can contain pictures of anyone, including people who are not suspected of any wrongdoing, and the images can come from anywhere — even from our social media accounts. Facial technology systems can vary, but in general, they tend to operate as follows:

Step 1: Face detection: The camera detects and locates the image of a face, either alone or in a crowd. The image may show the person looking straight ahead or in profile.

Step 2: Face analysis; Next, an image of the face is captured and analyzed. Most facial recognition technology relies on 2D rather than 3D images because it can more conveniently match a 2D image with public photos or those in a database. The software reads the geometry of your face. Key factors include the distance between your eyes, the depth of your eye sockets, the distance from forehead to chin, the shape of your cheekbones, and the contour of the lips, ears, and chin. The aim is to identify the facial.

CHAPTER-4

HARDWARE DESCRIPTION

4.1 HARDWARE COMPONENTS

- Laptop
- NodeMCU ESP8266
- Relay module
- 12v DC adaptor
- LED (light emitting diode)
- 7805 Voltage regulator
- IR sensor
- Solenoid Lock
- Buzzer

4.2 ESP8266 INTRODUCTION

The ESP8266 is a low cost MCU with built in Wi-Fi. It can be paired with another host microcontroller, like an Arduino, to provide Wi-Fi networking capability for a basic IoT development platform. Additionally, the ESP8266 can be used as a stand-alone MCU, as it includes a 32-bit 80 MHz processor, 16 GPIO pins (4 PWM enabled) and a built in Analog-to-Digital converter, SPI and I2C interfaces and more… The MCU has a n operating voltage of 2.5V – 3.6V and average operating current of 80 mA.

An open source, full development board around ESP8266 has been designed by the Node MCU team that includes additional USB to Serial UART adapter, a micro USB port for programming and a 3.3v regulator. The Node MCU board comes ready out-of-the-box for you to connect to your computer, install USB drivers, and start writing programs that connect to your Wi-Fi network! All of that at an average price of about $4 USD on eBay.

The Node MCU board comes ready out-of-the-box for you to connect to your computer, install USB drivers, and start writing programs that connect to your Wi-Fi network! All of that at an average price of about $4 USD on eBay.

Fig-4.1 ESP8266 – ESP-12E version

ESP8266 is the most popular and low-cost Wi-Fi SoC with TCP/IP stack and a low power 32 bit microcontroller manufactured by express if, a Shanghai based Chinese manufacturer. Nowadays IoT (Internet of Things) is an emerging field. This is the one of the most popular and low cost solution for connecting ‘Things’ to internet via Wi-Fi.

ESP8266 belongs to Express if System’s Smart Connectivity Platform (ESCP) which is a set of high performance, high integration wireless SoC (System on Chip) intended for power and space constrained mobile platform designers. It is a self-contained Wi-Fi networking solution, which means that we can store and run the application in it without the aid of any external

Fig-4.2 ESP8266 – Wi-Fi SoC

processors. We can also integrate it with another application processor if required by using SPI/SDIO or I^2C/UART interface.

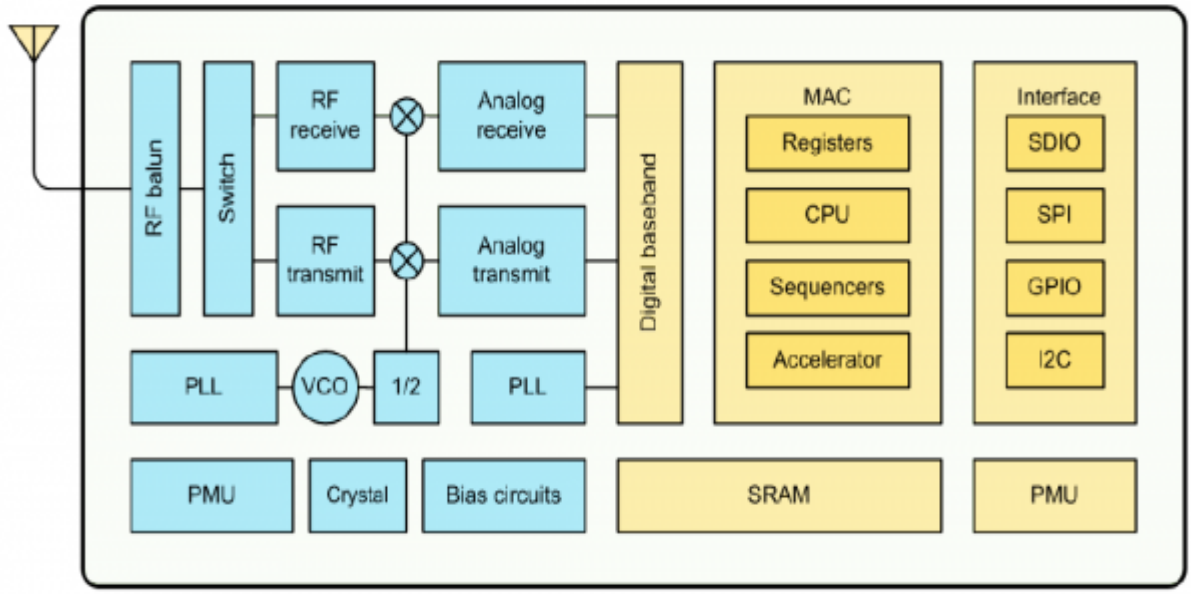

Fig-4.3 ESP8266 – Block Diagram

4.2.1 Features of ESP8266:

- 802.11 b/g/n
- Integrated low power 32-bit MCU
- Integrated 10-bit ADC
- Integrated TCP/IP protocol stack
- Integrated TR switch, balun, LNA, power amplifier and matching network
- Integrated PLL, regulators, and power management units
- Supports antenna diversity
- WiFi 2.4 GHz, support WPA/WPA2
- Support STA/AP/STA+AP operation modes
- Support Smart Link Function for both Android and iOS devices
- SDIO 2.0, (H) SPI, UART, I2C, I2S, IR Remote Control, PWM, GPIO
- STBC, 1x1 MIMO, 2x1 MIMO
- A-MPDU & A-MSDU aggregation & 0.4s guard interval
- Deep sleep power < 5uA
- Wake up and transmit packets in < 2ms
- Standby power consumption of < 1.0mW (DTIM3)
- +20 dBm output power in 802.11b mode

4.2.2 ESP8266 Pin Configuration

Pin Number	Pin Name	Alternate Name	Normally used for	Alternate purpose
1	**Ground**	-	Connected to the ground of the circuit	-
2	**TX**	GPIO – 1	Connected to Rx pin of programmer/uC to upload program	Can act as a General purpose Input/output pin when not used as TX
3	**GPIO-2**	-	General purpose Input/output pin	-
4	**CH_EN**	-	Chip Enable – Active high	-
5	**GPIO - 0**	Flash	General purpose Input/output pin	Takes module into serial programming when held low during start up
6	**Reset**	-	Resets the module	-
7	**RX**	GPIO – 3	General purpose Input/output pin	Can act as a General purpose Input/output pin when not used as RX
8	**Vcc**	-	Connect to +3.3V only	

Table 4.1 ESP8266 Pin Configuration

4.2.3 Usage of the ESP8266 Module:

There are so many methods and IDEs available to with ESP modules, but the most commonly used on is the Arduino IDE.

The **ESP8266 module** works with 3.3V only, anything more than 3.7V would kill the module. Program an **ESP-01** by using the FTDI board that supports 3.3V programming. One commonly problem that everyone faces with ESP-01 is the powering up problem. The module is a bit power hungry while programming and power it with a 3.3V pin on Arduino or just use a potential divider. So it is important to make a small voltage regulator for 3.31v that could supply a minimum of 500mA. One recommended regulator is the LM317. A **simplified circuit diagram for using the ESP8266-01 module** is given below

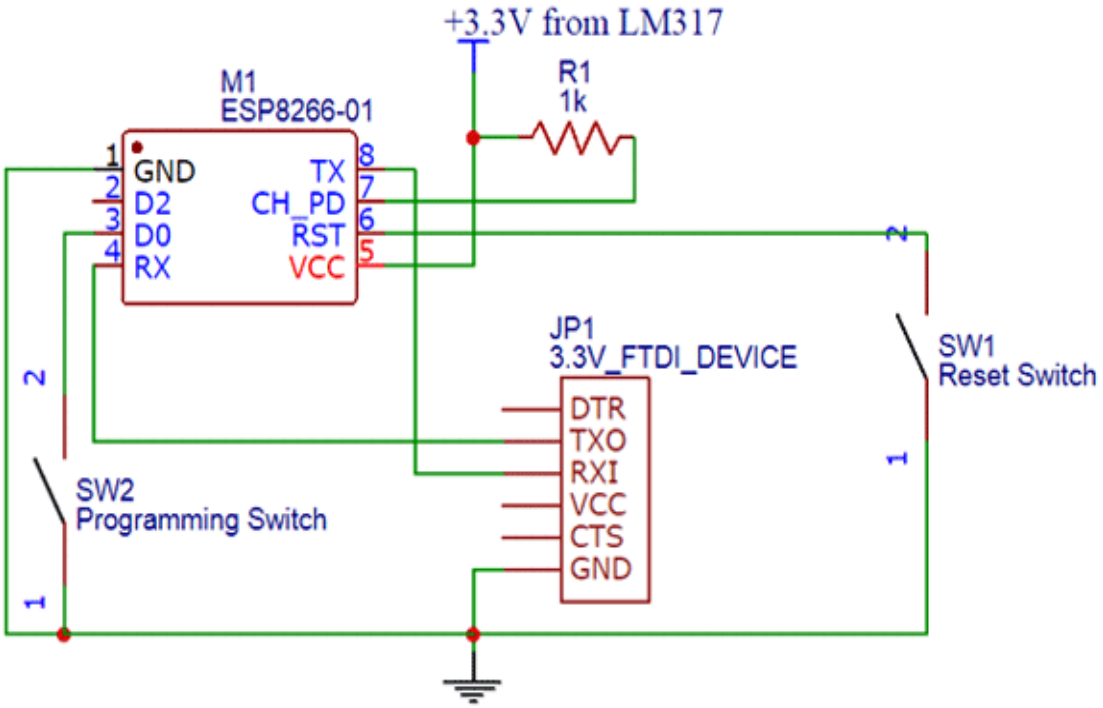

Fig-4.4 Circuit diagram

4.3 SOLENOID LOCK:

A solenoid lock works on the electronic-mechanical locking mechanism. This type of lock has a slug with a slanted cut and a good mounting bracket. When the power is applied, DC creates a magnetic field that moves the slug inside and keeps the door in the unlocked position. The slug will retain its position until the power is removed. When the power is disconnected, the slug moves outside and locks the door. It doesn’t use any power in a locked state. To drive the solenoid lock, you would need a power source that can give 12V @ 500mA.

Electrical keys that run on 12 volts Customers can open and close remote screws without using a key with automatic locks. The program's login keys can also be screwed and unlocked under certain conditions without the need for human participation. IOT sensors are used in user locks to employ wireless inbound devices that allow users to access the port using their smartphone or other connected devices via the internet. Without a key, a smart lock allows users to open doors and distribute virtual keys to guests from anywhere.

To activate or remove power from the key, electrical locks use magnets, monsters, or motors. Essential functions, such as variables, can be performed independently. You can, for example, remove a network access point from a home or do difficult tasks like managing device user access. By creating or removing power, power locks drive the keys with a magnet, electric motor, or machine. Using keys is as simple as using a switch.

- The 12V DC solenoid lock is used for locking sell-machine, storage shelf, file cabinet and etc.
- The solenoid 12V lock works as the circuits disconnects, and it will unlock as the instant power-on.
- The solenoid lock features a anti-theft and shockproof design, the lock is better than other kinds of locks.
- This 12V solenoid lock is steady, durable and energy-saving and had a long lifespan.

4.3.1 FEATURES:

- Iron Body Material
- High quality ultra-compact electric lock.
- Rustproof, durable, safe, convenient to use.
- Suction tightly sucks the iron, thus locking the door. .
- Adopts the principle of electric magnetism, when the current through the silicon, the electromagnetic lock will achieve a strong.

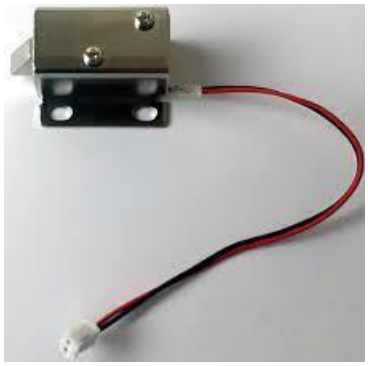

Fig-4.5 Solenoid electronic lock

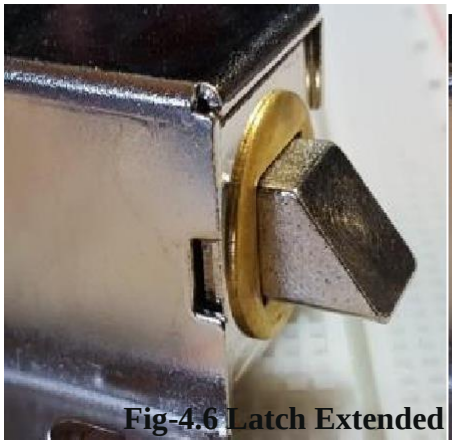

Fig-4.6 Latch Extended

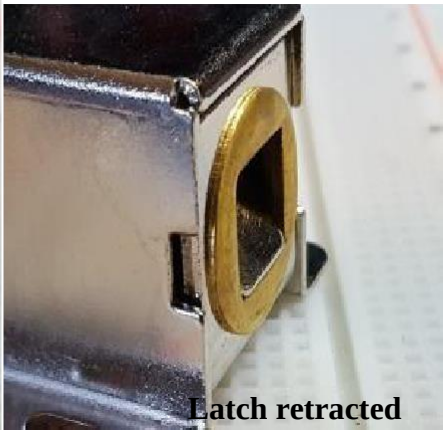

Latch retracted

4.3.2 APPLICATIONS:

- Home Automation
- Cabinet locking
- Smart code locking doors
- Electronic door control for attendance systems
- Mobile control of door locks

4.3.3 SPECIFICATIONS:

- Operating voltage (VDC): 12V
- Rated current(mA): 600
- Lead length: 25mm
- Locking telescopic length: 10mm
- Unlock time: 1sec
- Weight(gm): 150gm
- Dimensions(mm): 54x42x28(LxWxH)

4.4 7805 VOLTAGE REGULATOR:

Voltage sources in a circuit may have fluctuations resulting in not providing fixed voltage outputs. A voltage regulator IC maintains the output voltage at a constant value. 7805 Voltage Regulator, a member of the 78xx series of fixed linear voltage regulators used to maintain such fluctuations, is a popular voltage regulator integrated circuit (IC).The xx in 78xx indicates the output voltage it provides. 7805 IC provides +5 volts regulated power supply with provisions to add a heat sink.

4.4.1 7805 VOLTAGE REGULATOR SPECIFICATIONS:

- Minimum Input voltage is 7V
- Maximum Input Voltage is 35V
- Current rating Ic = 1A
- Maximum Output Voltage VMax=5.2V
- Minimum Output Voltage VMin=4.8V

4.4.2 7805 VOLTAGE REGULATOR PIN OUT:

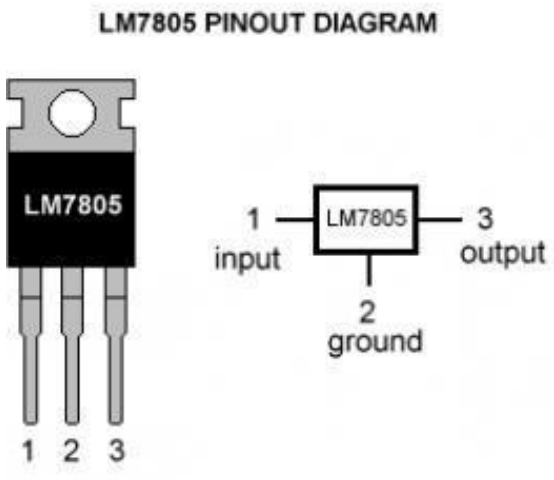

Fig-4.7: IC 7805 Pinout

- **PIN 1-INPUT**
- The function of this pin is to give the input voltage. It should be in the range of 7V to 35V. We apply an unregulated voltage to this pin for regulation. For 7.2V input, the PIN achieves its maximum efficiency

- **PIN 2-GROUND**
- We connect the ground to this pin. For output and input, this pin is equally neutral (0V).
- **PIN 3-OUTPUT**
- This Pin is used to take the regulated output. It Will be 5V

There is a significant difference between the input voltage & the output voltage of the voltage regulator. This difference between the input and output voltage is released as heat. The greater the difference between the input and output voltage, more the heat is generated

If the regulator does not have a heat sink to dissipate this heat, it can get destroyed and malfunction. Hence, it is advisable to limit the voltage to a maximum of 2-3 volts above the output voltage. So, we now have 2 options. Either design your circuit so that the input voltage going into the regulator is limited to 2-3 volts above the output regulated voltage or place an appropriate heat sink, that can efficiently dissipate heat.

All voltage sources cannot able to give fixed output due to fluctuations in the circuit. For getting constant and steady output, the voltage regulators are implemented. The integrated circuits which are used for the regulation of voltage are termed as voltage regulator ICs. Here, we can discuss the IC 7805.

The voltage regulator IC 7805 is actually a member of the 78xx series of voltage regulator ICs. It is a fixed linear voltage regulator. The xx present in 78xx represents the value of the fixed output voltage that the particular IC provides. For 7805 IC, it is +5V DC regulated power supply. This regulator IC also adds a provision for a heat sink. The input voltage to this voltage regulator can be up to 35V, and this IC can give a constant 5V for any value of input less than or equal to 35V which is the threshold limit.

4.4.3 7805 VOLTAGE REGULATOR FEATURES:

- 5V Positive Voltage Regulator.
- Minimum Input Voltage is 7V.
- Maximum Input Voltage is 25V.
- Operating current(IQ) is 5Ma.
- Internal Thermal Overload and Short circuit current limiting protection is available.
- Junction Temperature maximum 125 degree Celsius.
- Available in TO-220 and KTE package.

4.4.4 7805 VOLATGE REGULATOR APPLICATIONS:

- Fixed-Output Regulator.
- 7805 Voltage regulator also finds usage in building circuits for inductance meters, phone chargers, portable CD player, infrared remote control extension, and UPS power supply circuits. Also, we designed a Stopwatch Circuit using IC7805.
- Positive voltage Regulator in Negative Voltage Configuration.
- Adjustable Output Regulator.
- Current Regulator.
- Adjustable DC Voltage Regulator.

- Regulated Dual-Supply.
- Output Polarity-Reversal-Protection Circuit.
- Reverse bias projection Circuit.

Fig-4.8 IC 7805 VOLTAGE REGULATOR

4.5 LED (LIGHT EMITTING DIODE):

A light emitting diode is a semiconductor device that emits light when current flows through it. Electrons in the semiconductor recombine with electron holes, releasing energy in the form of photons. The color of the light (corresponding to the energy of the photons) is determined by the energy required for electrons to cross the band gap of the semiconductor. White light is obtained by using multiple semiconductors or a layer of light-emitting phosphor on the semiconductor device. A light-emitting diode (LED) is a semiconductor device that emits light when an electric current flows through it. When current passes through an LED, the electrons recombine with holes emitting light in the process. LEDs allow the current to flow in the forward direction and block the current in the reverse direction.

Light-emitting diodes are heavily doped p-n junctions. Based on the semiconductor material used and the amount of doping, an LED will emit a colored light at a particular spectral wavelength when forward biased. As shown in the figure, an LED is encapsulated with a transparent cover so that emitted light can come out.

4.5.1 LED SYMBOL:

The LED symbol is the standard symbol for a diode, with the addition of two small arrows denoting the emission of light.

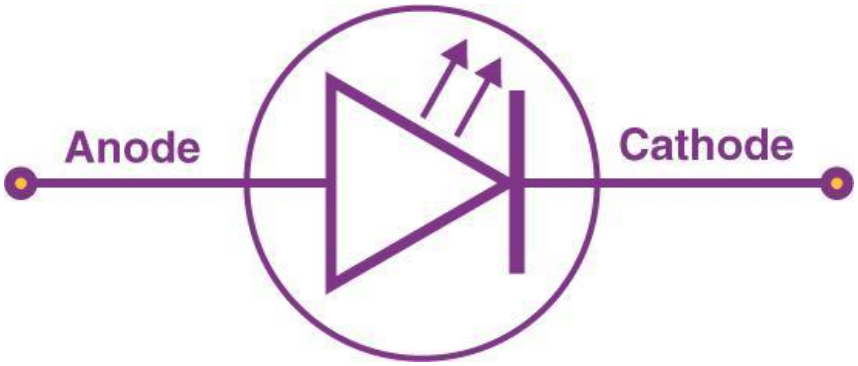

Fig-4.9: LED Symbol

4.5.2 WORKING PRINCIPLE OF LED:

When the diode is forward biased, the minority electrons are sent from p → n while the minority holes are sent from n → p. At the junction boundary, the concentration of minority carrier's increases. The excess minority carriers at the junction recombine with the majority charges carriers.

The energy is released in the form of photons on recombination. In standard diodes, the energy is released in the form of heat. Electroluminescence is an optical phenomenon, and electrical phenomenon where a material emits light in response to an electric current passed through it. As the forward voltage increases, the intensity of the light increases and reaches a maximum.

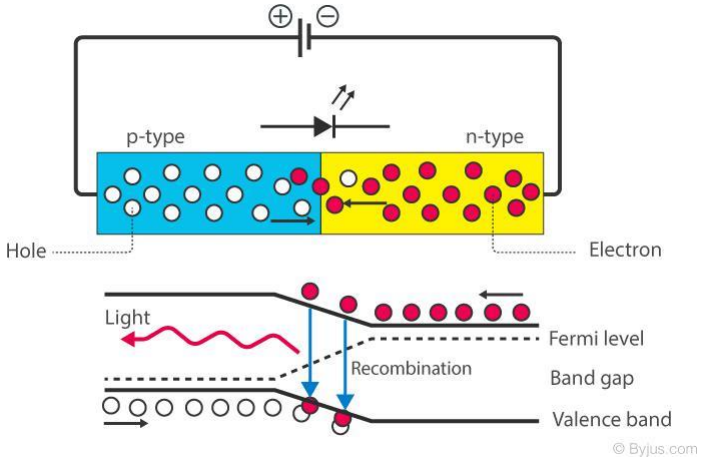

Fig-4.10: Working principle of LED

The colour of an LED is determined by the material used in the semiconducting element. The two primary materials used in LEDs are aluminum gallium indium phosphide alloys and indium gallium nitride alloys. Aluminum alloys are used to obtain red, orange and yellow light, and indium alloys are used to get green, blue and white light. Slight changes in the composition of these alloys change the colour of the emitted light.

Any LED can be used as a light source for a short-range fiber-optic transmission system—that is, over a distance of less than 100 meters (330 feet). For long-range fiber optics, however, the emission properties of the light source are selected to match the transmission properties of the optical fiber, and in this case the infrared LEDs are a better match than the visible-light LEDs.

Glass optical fibers suffer their lowest transmission losses in the infrared region at wavelengths of 1.3 and 1.55 micrometers. To match these transmission properties, LEDs are employed that are made of gallium indium arsenide phosphide layered on a substrate of indium phosphide. The exact composition of the material may be adjusted to emit energy precisely at 1.3 or 1.55 micrometers.

4.5.3 PROPERTIES OF LASER LIGHT:

- **Laser Light is Monochromatic**
  Unlike white light, which is made of seven colours, laser light is made of a single colour.
- **Laser Light is Directional** Laser light is highly directional.

- **Laser Light is Coherent**

Laser light is coherent because the wavelengths of the laser light are in phase in space and time.

4.5.4 TYPES OF LED:

- Miniature LEDs
- High-Power LEDs
- Flash LED
- Bi and Tri-Colour
- Red Green Blue LEDs
- Alphanumeric LED
- Lighting LED

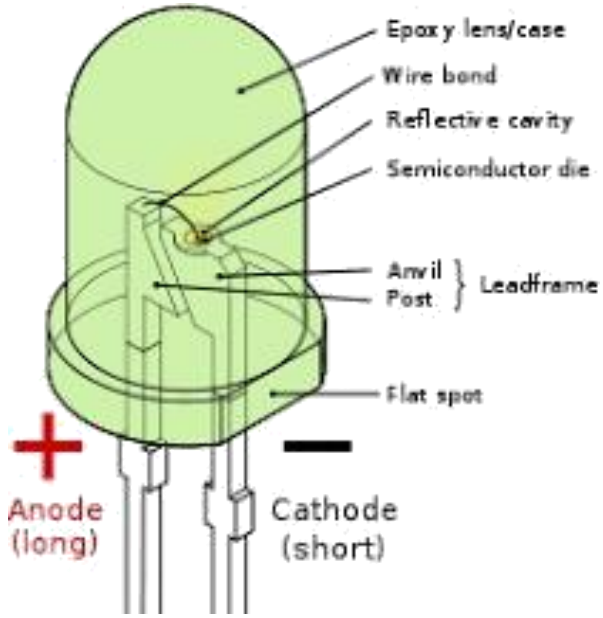

Fig 4.11 LED

4.5.5 APPLICATIONS OF LED:

LEDs find applications in various fields, including optical communication, alarm and security systems, remote-controlled operations, robotics, etc. It finds usage in many areas because of its long-lasting capability, low power requirements, swift response time, and fast switching capabilities. Below are a few standards LED uses:

- Used for TV back-lighting
- Used in displays
- Used in Automotive

The "millimeter" size refers to the diameter of the LED. For example, if you need to drill a hole in a box for your 5mm blinky LED, the hole size should be 5mm, and you'd need a 5mm drill bit to make it. 5mm are the most common size you'll see, and they can be extremely bright!
Green 3mm, Red 5mm and White 10mm LEDs

- **5mm LEDs** can be so bright, they are often used as **illumination** (lighting something up, like a flashlight, we'll talk about this next).
- **3mm LEDs** are not as bright but are smaller, and are good for **indication** (like an LED that tells you something is on). They're not as good for illumination because they have a smaller area that is lit.
- **10mm LEDs** are a little rarer, they are huge and chunky but are usually just 5mm LEDs with a bigger case so they aren't any brighter. They can be good indicators but we rarely

see them as illuminators.

Fig-4.12: Led sizes

4.5.6 ADVANTAGES OF LEDs

- LEDs consume less power, and they require low operational voltage.
- No warm-up time is needed for LEDs.
- The emitted light is monochromatic.
- They exhibit long life and ruggedness.

4.6 12V DC ADAPTOR:

A 12VDC power supply is a device that supplies electrical energy to a load. In other words, a power supply's primary purpose is converting electric current from the source into the required voltage, frequency, and current, which powers the load. The 12V DC power supplies fall into two categories, namely

- 12V regulated power supplies
- 12V unregulated power supplies

In addition, the 12V regulated power supply has three subgroups:

- Switching regulator AC to DC
- Linear regulator AC to DC
- Switching regulator DC to DC

Fig 4.13 12V DC Adapter

Power supplies with a 12 volt input or output are often used in applications related to vehicles. A power supply with a 12-volt DC input (more specifically identified as a DC-DC converter) may be used within the vehicle, operating on its 12-volt battery. A **12-volt** output power supply may be used to power equipment intended for vehicular use when it is not installed in a vehicle; for example, radio communications equipment.

4.6.1 APPLICATIONS OF 12V DC POWER SUPPLY:

- Military
- Medical
- Motor control

- Data acquisition
- Analog and Data communications
- Fiber optic and telecommunication networks
- Power and utility industries
- Educational facilities and universities
- Computer peripherals
- Electronics and instrumentation

4.6.2 FEATURES OF 12V DC POWER SUPPLY

- Excellent Quality
- Short Circuit, Over Voltage & Over Current Protection
- Incredibly Low Fault Rates
- Power Supply for LED, SMD, LED Strip, RGB LED Strip
- Ideal for Routers / Modems / Mobile Phones / Mp3 players / POS Machines etc
- No Minimum Load
- This power supply is a regulated Center Positive power supply
- It's plug design is for Indian power socket so, no plug converter is required
- Compact size & light weight
- High Reliability
- Regulated Stable Voltage
- Good quality SMPS Based Adapter
- Stabilized Output, low ripple & low interference
- High Efficiency & low energy consumption.

4.6.3 SPECIFICATIONS OF 12V DC POWER SUPPLY:

- Input - 100-240 VAC 50/60Hz
- Category - Switch Mode Power Adaptor (SMPS)
- Output Type - DC
- Output - 12Volts 1Amp.

4.7 RELAY MODULE:

RELAY:

Relay is one kind of electro-mechanical component that functions as a switch. The relay coil is energized by DC so that contact switches can be opened or closed.

A single channel 5V relay module generally includes a coil, and two contacts like normally open (NO) and normally closed (NC).

5V RELAY

A 5v relay is an automatic switch that is commonly used in an automatic control circuit and to control a high-current using a low-current signal. The input voltage of the relay signal ranges from 0 to 5V.

4.7.1 5V RELAY PIN CONFIGURATION:

The pin configuration of the 5V relay is shown below. This relay includes 5-pins where each pin and its functionality are shown below.

The relay module with a single channel board is used to manage high voltage, current loads like solenoid valves, motor, AC load & lamps. This module is mainly designed to interface through different microcontrollers like PIC, Arduino, etc.

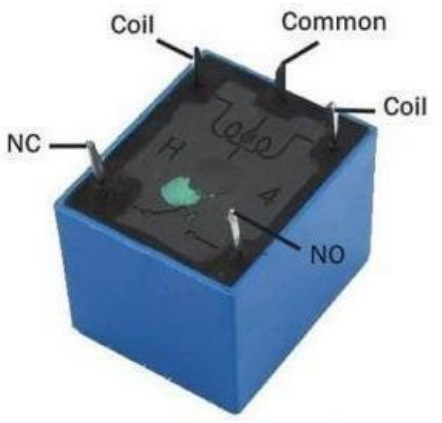

Fig-4.14: 5V Relay

Pin1 (End 1): It is used to activate the relay; usually this pin one end is connected to 5Volts

whereas another end is connected to the ground. **Pin2 (End 2):** This pin is used to activate the Relay.

Pin3 (Common (COM)): This pin is connected to the main terminal of the Load to make it active.

Pin4 (Normally Closed (NC)): This second terminal of the load is connected to either NC/ NO pins. If this pin is connected to the load, then it will be ON before the switch.

Pin5 (Normally Open (NO)): If the second terminal of the load is allied to the NO pin, then the load will be turned off before the switch.

4.7.2 FEATURES:

- Normal Voltage is 5V DC
- Normal Current is 70mA
- AC load current Max is 10A at 250VAC or 125V AC
- DC load current Max is 10A at 30V DC or 28V DC.
- It includes 5-pins & designed with plastic material.
- Operating time is 10msec.
- Release time is 5msec.
- Maximum switching is 300 operating per minute.

4.7.3 5V RELAY MODULE

The relay module with a single channel board is used to manage high voltage, current loads like solenoid valves, motor, AC load & lamps. This module is mainly designed to interface through different microcontrollers like PIC, Arduino, etc.

4.7.4 5V Relay Module Pin Configuration:

The pin configuration of the 5V relay module is shown below. This module includes 6-pins where each pin and its functionality are discussed below.

Fig-4.15: Relay Module Pin Diagram

- **Normally Open (NO):** This pin is normally open unless we provide a signal to the relay modules signal pin. So, the common contact pin smashes its link through the NC pin to make a connection through the NO pin
- **Common Contact:** This pin is used to connect through the load that we desire to switch by using the module.
- **5V VCC:** This pin needs 5V DC to work. So 5V DC power supply is provided to this pin.
- **Ground:** This pin connects the GND terminal of the power supply.
- **Normally Closed (NC):** This NC pin is connected through the COM pin to form a closed circuit. However, this NC connection will break once the relay is switched through providing an active high/low signal toward the signal pin froma microcontroller.
- **Signal Pin:** The signal pin is mainly used for controlling the relay. This pin works in two cases like active low otherwise active high. So, in active low case, the relay activates once we provide an active low signal toward the signal pin

The components in a 5v relay module with a single channel include a relay, output terminal, status LED, power LED, freewheeling diode, input connector & switching transistor.

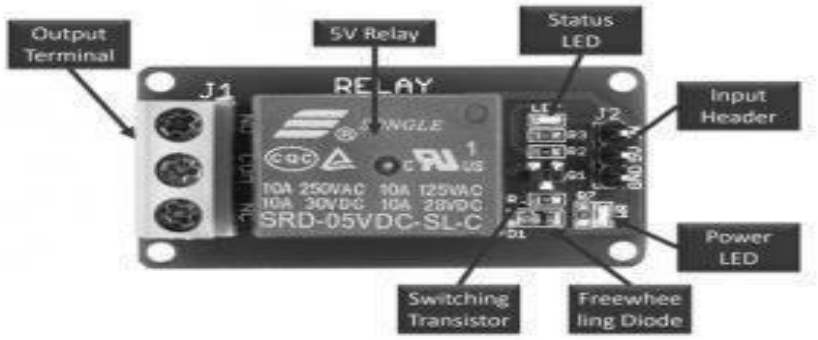

Fig-4.16: Relay Module Components

5V RELAY

A 5V relay is coated with blue color plastic material. For both AC & DC loads, the utmost operating voltage & current are also displayed on the relay. This relay operates with 5V, so it is called a 5V relay.

OUTPUT TERMINAL

The output terminal of the relay module is located at the left-hand side, used to fix an AC/DC load & AC/DC i/p power source. Every o/p connector's terminal is connected through NC, COM pins & NO of the relay. the relay module consists of screws that are used to connect wires & cables. The max current supported by this module is 10A & the max contact voltage is 250V AC & 30V DC. Thick main cables are mainly used whenever high voltage & current load is used.

STATUS LED

Status LED is connected by using a current limiting resistor that is located on the top right side of the relay module. So this LED illustrates the relay status by activating the relay & coil through a signal pin. The DC supplies throughout a relay coil.

POWER LED

Power LED shows the condition of the power source that is connected through the single channel module. If we provide the above 5V source toward both the pins of the module like VCC & GND, the LED will be damaged due to high voltage.

FREE WHEELING DIODE

The connection of this diode can be done across the coil to keep away from the back EMF effect, so-called a fly back diode. The type of coil used in the relay is the inductive type. Once the current supplies throughout an inductive load, then it generates a back EMF voltage, which may harm the circuit. So, this diode is mainly used to keep away from this effect.

INPUT CONNECTOR

The input connector is located on the right side of the module. This connector is mainly used to supply a 5V power supply & input signal. In addition, it also supplies power supply toward the power LED, relay coil & status LED.

SWITCHING TRANSISTOR

Generally, the input signal which is given to a relay is from the I/O pins of microcontrollers like ESP32, TM4C123, Arduino, etc. However, the highest current sourcing capacity of GPIO pins is usually below 20mA.

Therefore, a switching transistor is used in this module is to strengthen the current to the requirement of the minimum current level of the relay coil. A switching transistor is used to control the 5V relay from the microcontroller's GPIO pin.

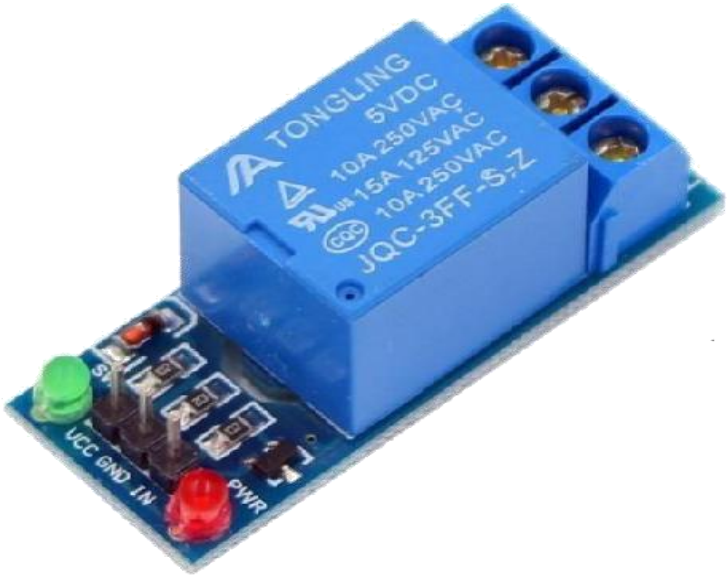

Fig 4.17 Relay module

Some kinds of relay modules are available with an opt isolator like a switching device to give optical isolation among high & low voltage circuits.

4.7.5 SPECIFICATIONS:

- Voltage supply ranges from 3.75V – 6V
- Quiescent current is 2Ma
- Once the relay is active then the current is ~70mA
- The highest contact voltage of a relay is 250VAC/30VDC
- The maximum current is 10A

4.7.6 WORKING OF RELAY MODULE:

The relay uses the current supply for opening or closing switch contacts. Usually, this can be done through a coil to magnetize the switch contacts & drags them jointly once activated. A spring drives them separately once the coil is not strengthened.

By using this system, there are mainly two benefits, the first one is, the required current for activating the relay is less as compared to the current used by relay contacts for switching. The other benefit is, both the contacts & the coil are isolated galvanic ally, which means there is no electrical connection among them.

4.7.7 ADVANTAGES OF RELAY MODULE:

- A remote device can be controlled easily
- It is triggered with less current but it can also trigger high power machines
- Easily contacts can be changed
- At a time, several contacts can be controlled using a single signal.
- Activating part can be isolated
- It can switch AC or DC
- At high temperatures, it works very well

4.7.8 APPLICATIONS OF RELAY MODULE:

- Used in over voltage/under voltage protection system
- Mains Switching
- Speed control of motors through start-delta converters
- Automatic electrical appliances
- Electrical isolation in between high & low power sources
- Lights
- AC voltage load switching using less voltage DC
- Delivery of Isolated power
- Home automation projects
- Switching with High Current.

4.8 BUZZER:

An audio signaling device like a beeper or buzzer may be electromechanical or piezoelectric or mechanical type. The main function of this is to convert the signal from audio to sound. Generally, it is powered through DC voltage and used in timers, alarm devices, printers, alarms, computers, etc. Based on the various designs, it can generate different sounds like alarm, music, bell & siren.

The pin configuration of the buzzer is shown above. It includes two pins namely positive and negative. The positive terminal of this is represented with the '+' symbol or a longer terminal. This terminal is powered through 6Volts whereas the negative terminal is represented with the '-'symbol or short terminal and it is connected to the GND terminal.

Once the two probes of the circuit are placed in the tank, it detects the level of water. Once the water level exceeds the fixed level, then it generates a beep sound through a buzzer connected to the circuit. This circuit uses a BC547B NPN transistor however we can also use any general-purpose transistor instead of using 2N3904/2N2222.

This buzzer uses a DC power supply that ranges from 4V – 9V. To operate this, a 9V battery is used but it is suggested to utilize a regulated +5V/+6V DC supply. Generally, it is connected through a switching circuit to switch ON/OFF the buzzer at the necessary time interval.

Fig-4.18 Buzzer

4.8.1 WORKING PRINCIPLE

- The working principle of a buzzer depends on the theory that, once the voltage is given across a piezoelectric material, then a pressure difference is produced. A piezo type includes piezo crystals among two conductors.
- Once a potential disparity is given across these crystals, then they thrust one conductor & drag the additional conductor through their internal property. So this continuous action will produce a sharp sound signal.

4.8.2 MOUNTING CONFIGURATIONS

- The mounting configurations of buzzers include the following.
- Panel Mount
- Wire Leads
- Screw Terminals
- Through Hole
- Spring Contact
- Surface Mount

4.8.3 USE OF BUZZER

- A buzzer is an efficient component to include the features of sound in our system or project. It is an extremely small & solid two-pin device thus it can be simply utilized on breadboard or PCB. So, in most applications, this component is widely used.
- There are two kinds of buzzers commonly available like simple and readymade. Once a simple type is power-driven then it will generate a beep sound continuously. A readymade type looks heavier & generates a Beep. Beep. Beep. This sound is because of the internal oscillating circuit within it.
- This buzzer uses a DC power supply that ranges from 4V – 9V. To operate this, a 9V battery is used but it is suggested to utilize a regulated +5V/+6V DC supply. Generally, it is connected through a switching circuit to switch ON/OFF the buzzer at the necessary time interval.

4.8.4 BUZZER CIRCUIT DIAGRAM

- The circuit diagram of the water level indicator using the buzzer is shown below. This circuit is used to sense or detect the water level within the tank or washing machine or pool, etc. This circuit is very simple to design using few components such as a transistor, buzzer, 300K variable resistor, and power supply or 9V battery.
- This water level sensor circuit working is very simple and the transistor used within the circuit works as a switch. Once the two probes notice the water level within the tank, then the transistor turns ON & the voltage begins flowing throughout the transistor to trigger the buzzer.

Once the two probes of the circuit are placed in the tank, it detects the level of water. Once the water level exceeds the fixed level, then it generates a beep sound through a buzzer connected to the circuit. This circuit uses a BC547B NPN transistor however we can also use any general-purpose transistor instead of using 2N3904/2N2222.

Once the two probes of the circuit are placed in the tank, it detects the level of water. Once the water level exceeds the fixed level, then it generates a beep sound through a buzzer connected to the circuit. This circuit uses a BC547B NPN transistor however we can also use any general-purpose transistor instead of using 2N3904/2N2222.

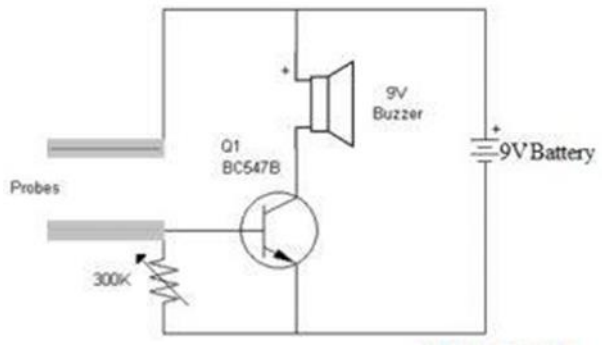

Fig-4.19 Buzzer Circuit Diagram

This water level sensor circuit working is very simple and the transistor used within the circuit works as a switch. Once the two probes notice the water level within the tank, then the transistor turns ON & the voltage begins flowing throughout the transistor to trigger the buzzer.

4.8.5 HOW TO CHOOSE A BUZZER

While choosing a buzzer or speaker, many principles need to consider like the following.

- Size of the product
- Consumption of Current
- Type of terminal
- Frequency Voltage
- Volume
- Type
- AC/DC Voltage
- The tone is Continuous/Pulsed
- Fixing – Pins, Leads/Surface Mount
- Output of Sound

4.8.6 APPLICATIONS

The applications of the buzzer include the following.

- Communication Devices
- Electronics used in Automobiles
- Alarm Circuits
- Portable Devices
- Security Systems Timers
- Household Appliances
- Electronic Metronomes
- Sporting Events
- Annunciator Panels
- Game Shows

4.9 IR SENSOR

IR technology is used in daily life and also in industries for different purposes. For example, TVs use an IR sensor to understand the signals which are transmitted from a remote control. The main benefits of IR sensors are low power usage, their simple design & their convenient features. IR signals are not noticeable by the human eye. The IR radiation in the electromagnetic spectrum can be found in the regions of the visible & microwave. Usually, the wavelengths of these waves range from 0.7 µm 5 to 1000µm. The IR spectrum can be divided into three regions like near-infrared, mid, and far-infrared. The near IR region's wavelength ranges from 0.75 – 3µm, the mid-infrared region's wavelength ranges from 3 to 6µm & the far IR region's infrared radiation's wavelength is higher than 6µm.

An infrared sensor is an electronic device, that emits in order to sense some aspects of the surroundings. An IR sensor can measure the heat of an object as well as detects the motion. These types of sensors measure only infrared radiation, rather than emitting it that is called a passive IR sensor. Usually, in the infrared spectrum, all the objects radiate some form of thermal radiation.

These types of radiations are invisible to our eyes, which can be detected by an infrared sensor. The emitter is simply an IR LED (Light Emitting Diode) and the detector is simply an IR photodiode that is sensitive to IR light of the same wavelength as that emitted by the IR LED.

When IR light falls on the photodiode, the resistances and the output voltages will change in proportion to the magnitude of the IR light received.

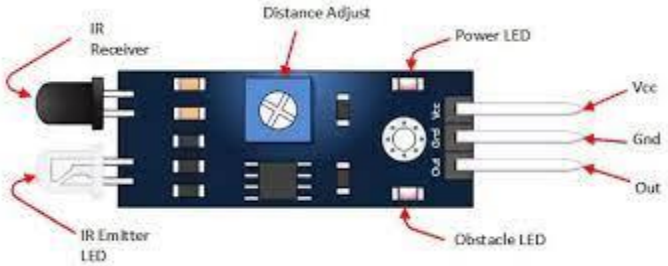

Fig 4.20 IR sensor

4.9.1 Working Principle

The working principle of an infrared sensor is similar to the object detection sensor. This sensor includes an IR LED & an IR Photodiode, so by combining these two can be formed as a photo-coupler otherwise optocoupler. The physics laws used in this sensor are planks radiation, Stephan Boltzmann & weins displacement.

IR LED is one kind of transmitter that emits IR radiations. This LED looks similar to a standard LED and the radiation which is generated by this is not visible to the human eye. Infrared receivers mainly detect the radiation using an infrared transmitter. These infrared receivers are available in photodiodes form. IR Photodiodes are dissimilar as compared with usual photodiodes because they detect simply IR radiation. Different kinds of infrared receivers mainly exist depending on the voltage, wavelength, package, etc.

Once it is used as the combination of an IR transmitter & receiver, then the receiver's wavelength must equal the transmitter. Here, the transmitter is IR LED whereas the receiver is IR photodiode. The infrared photodiode is responsive to the infrared light that is generated through an infrared LED. The resistance of photo-diode & the change in output voltage is in proportion to the infrared light obtained. This is the IR sensor's fundamental working principle.

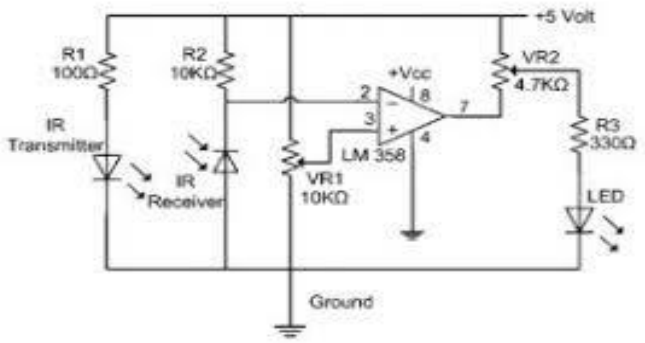

Fig 4.21 Circuit diagram

Once the infrared transmitter generates emission, then it arrives at the object & some of the emission will reflect back toward the infrared receiver. The sensor output can be decided by the IR receiver depending on the intensity of the response.

4.9.2 Types of Infrared Sensor

Infrared sensors are classified into two types like active IR sensor and passive IR sensor.

Active IR Sensor

This active infrared sensor includes both the transmitter as well as the receiver. In most of the applications, the light-emitting diode is used as a source. LED is used as a non-imaging infrared sensor whereas the laser diode is used as an imaging infrared sensor.These sensors work through energy radiation, received & detected through radiation. Further, it can be processed by using the signal processor to fetch the necessary information. The best examples of this active infrared sensor are reflectance and break beam sensor.

Passive IR Sensor

The passive infrared sensor includes detectors only but they don’t include a transmitter. These sensors use an object like a transmitter or IR source. This object emits energy and detects through infrared receivers. After that, a signal processor is used to understand the signal to obtain the required information.

The best examples of this sensor are pyroelectric detector, bolometer, thermocouple-thermopile, etc. These sensors are classified into two types like thermal IR sensor and quantum IR sensor. The thermal IR sensor doesn't depend on wavelength. The energy source used by these sensors is heated. Thermal detectors are slow with their response and detection time. The quantum IR sensor depends on the wavelength and these sensors include high response and detection time. These sensors need regular cooling for specific measurements.

4.9.3 Advantages

The **advantages of IR sensor** include the following

- It uses less power
- The detection of motion is possible in the presence or absence of light approximately with equal reliability.
- They do not need contact with the object for detection
- There is no data leakage because of the ray direction
- These sensors are not affected by oxidation & corrosion
- Noise immunity is very strong

4.9.4 Disadvantages

The disadvantages of IR sensor include the following

- Line of sight is required
- Range is limited
- These can be affected by fog, rain, dust, etc
- Less data transmission rate

4.9.5 IR Sensor Applications

IR sensors are classified into different types depending on the applications. Some of the typical applications of different types of sensors. The speed sensor is used for synchronizing the speed of multiple motors. The temperature sensor is used for industrial temperature control. PIR sensor is used for an automatic door opening system and the Ultrasonic sensor is used for distance measurement.

IR sensors are used in various Sensor based projects and also in various electronic devices which measures the temperature that is discussed below.

- Meteorology
- Climatology
- Photo-bio modulation
- Analysis of Water
- Gas detectors
- Testing of Anesthesiology
- Exploration of Petroleum
- Safety of Rail

CHAPTER 5

SOFTWARE IMPLEMENTATION

5.1 STEPS TO SETUP ARDUINO IDE FOR NODEMCU ESP8266

Step 1: Installing Arduino IDE Software

Install Arduino IDE software from the link http://www.arduino.cc/en/main/software

Step 2: Arduino IDE Icon

After installing Arduino IDE icon is created on the Desktop as show in the figure

FIG 5.1 Arduino IDE icon

Step 3: Opening Arduino IDE

Click on the Icon to open the Arduino window as shown in the figure

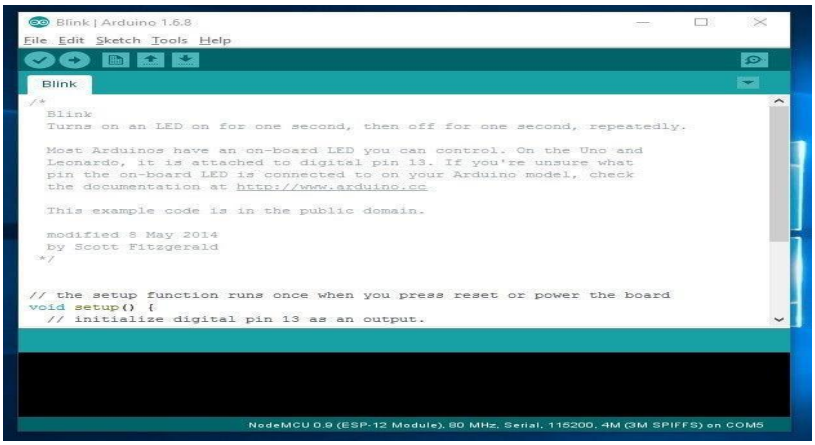

Fig 5.2 Arduino IDE window

Step 4: Preferences

Open the File and click on the Preferences as shown in the below figure

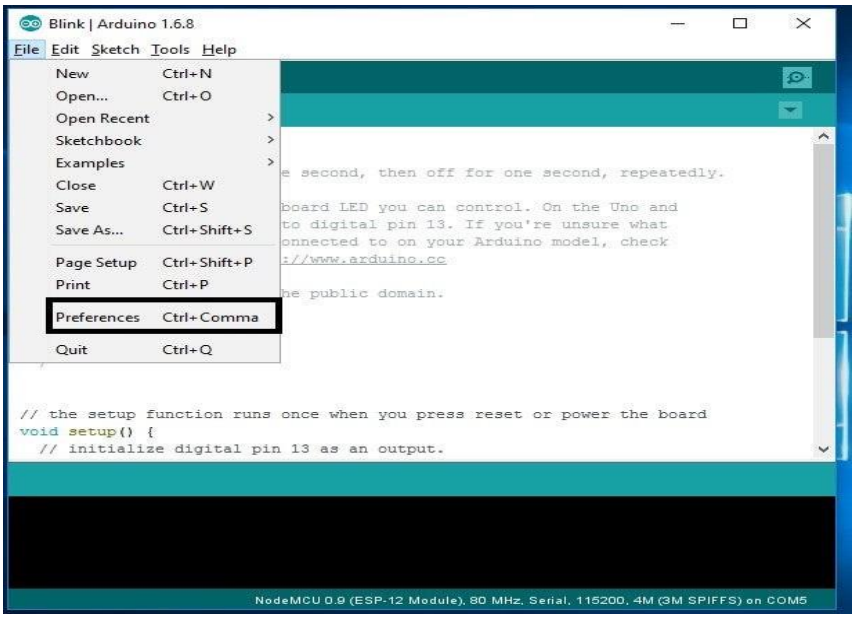

FIG 5.3 Preferences of Arduino IDE

Step 5: Adding ESP8266 Board Manager

In the Additional Boards Manager enter below URL.

http://arduino.esp8266.com/stable/package_esp8266com_indexjson As highlighted in the figure and enter OK.

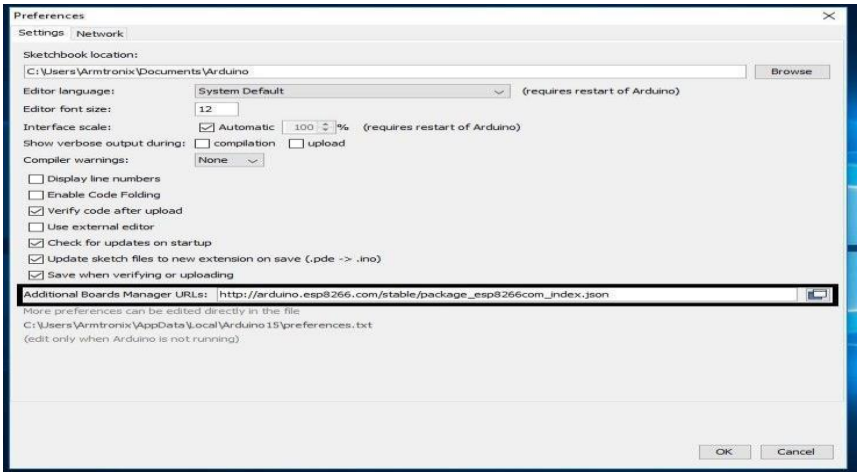

Fig-5.4 Adding ESP8266 board manager

Step 6: Selecting Board

Now open the tools in that select **Board: "Arduino/Genuino Uno"** and click on the **Boards Manager** as shown in the figure

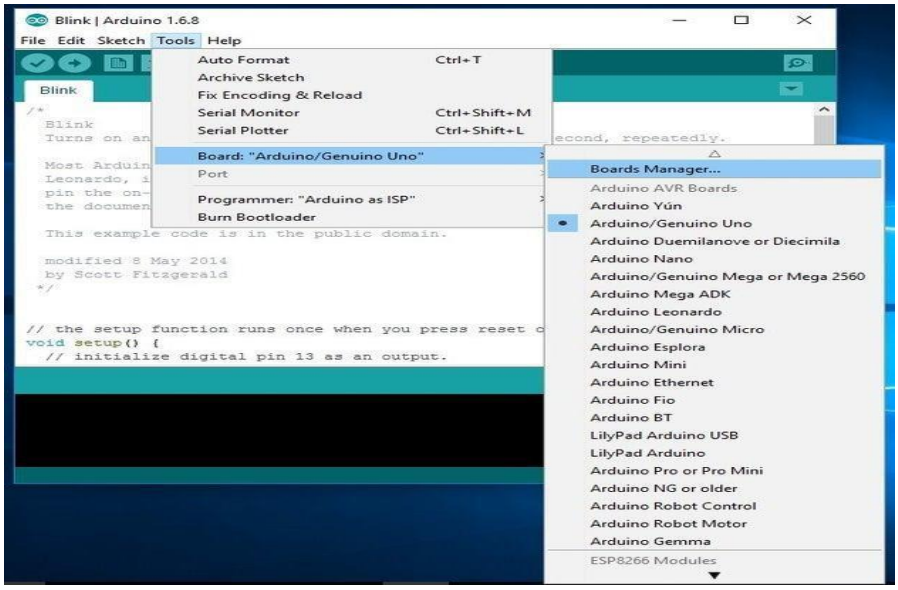

Fig 5.5 Selecting Board

Step 7: ESP8266 Board Package

The Boards Manager window opens, scroll the window page to bottom till you see the module with the name ESP8266. Once we get it, select that module and select version and click on the Install button. When it is installed it shows Installed in the module as shown in the figure

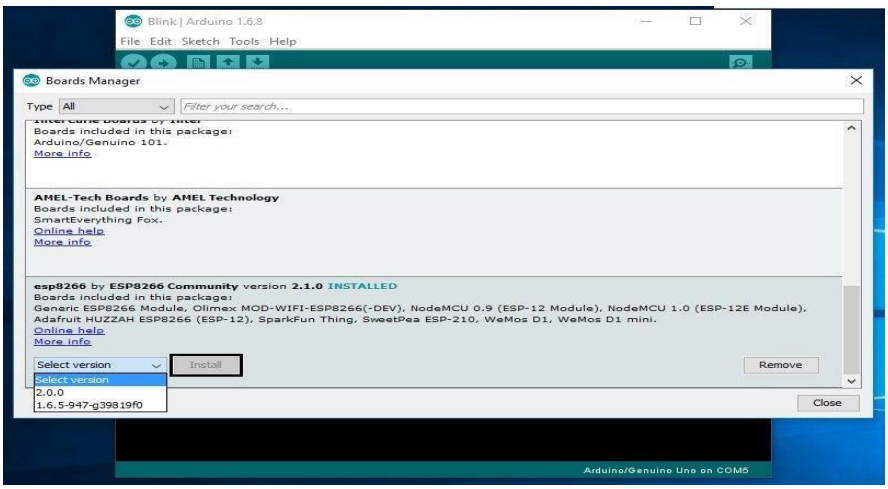

Fig 5.6 ESP8266 Board Package

Step 8: Selecting ESP8266 Arduino Board

To run the esp8266 with Arduino we have to select the **Board: "Arduino/Genuino Uno"** and then change it to **NodeMCU 1.0 (ESP-12E Module)** or other esp8266 modules depending on what you have. This can be done by scrolling down, as shown in the figure.

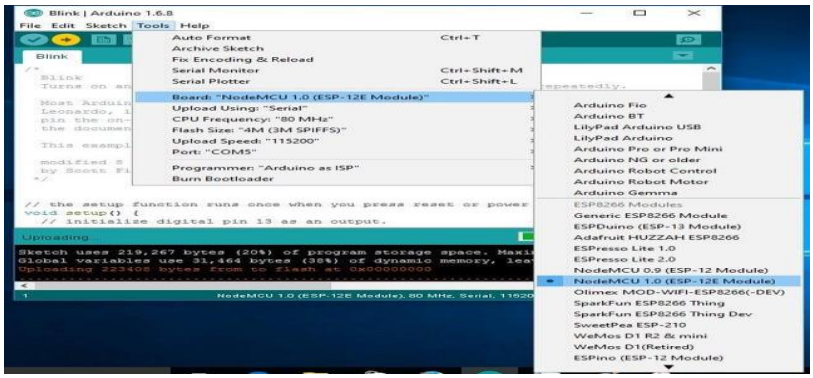

Fig-5.7 Selecting ESP8266 Arduino Board

Step 9: Connecting ESP8266 to the PC

Now let's connect the ESP8266 module to your computer through USB cable as shown in the figure. When module is connected to the USB, COM port is detected eg: here COM5 is shown in the figure.

Fig-5.8 Connecting ESP8266 to the PC

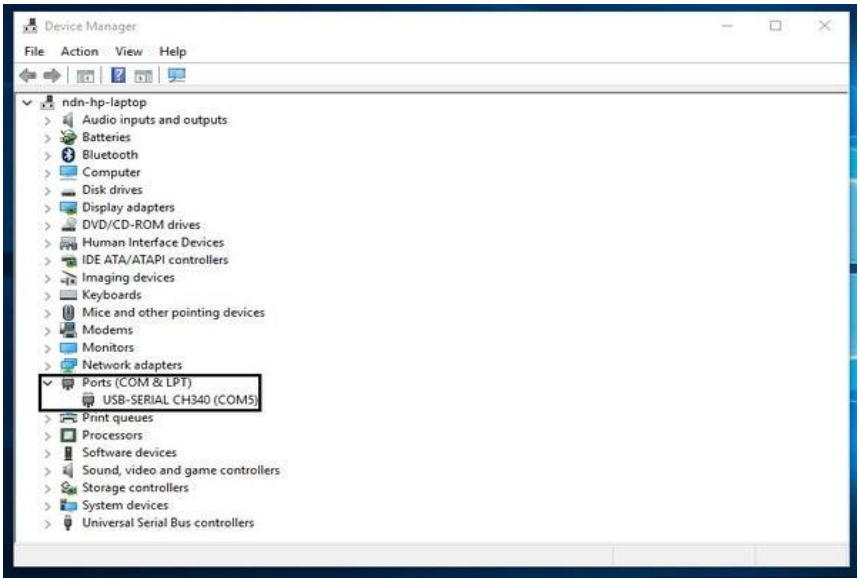

FIG 5.9 Selecting USB Ports

Step 10: Code to Test NodeMCU Functionality

This is a simple sketch that will flash the LED on pin D0 every 1/4 second (250mS). The routine will also have the NodeMCU send a small text message over the communication channel and will display it in the **Serial Monitor**. Copy the code below and paste it into a blank sketch in the IDE.

CODE:

```
  void setup () {
  pinMode (D0, OUTPUT);  // Blue LED Beside CP2102
  Serial.begin(9600);
}
  void loop() {
  Serial.println("Welcome To PCBoard.ca");  // display message on console
digitalWrite(D0, HIGH);  delay(500);  digitalWrite(D0, LOW);
delay(250);
}
```

FIG 5.10 Code dumping

After entering the sketch, press the right-facing arrow to Compile and Upload the code to the NodeMCU. You will be prompted to save the sketch, name the sketch "blinky" and press Save**.** The saving, compiling, and uploading of the sketch to the NodeMCU may take a minute or two depending on the speed of your system.

Press the Serial Monitor icon (located on the upper right side of the screen). This will display the welcome message which is generated on the NodeMCU.

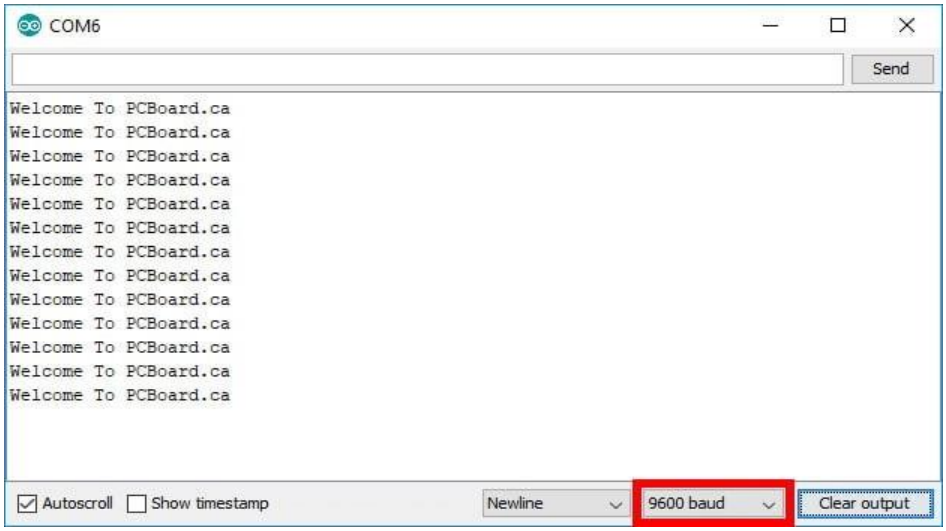

FIG 5.11 Serial monitor interface

If you do not see text, check the terminal speed box located at the bottom of the window (showing in Red). It must be set for 9600 to display text coming from the NodeMCU.

This completes the configuration of the Arduino IDE to allow for the programming of the NodeMCU ESP8266. The ability to interface to the NodeMCU is endless with everything from LEDs, temperature sensors, motor controllers and servos, LCD displays, moisture sensors, and more. The possibilities are endless.

5.2 BLYNK APP

Blynk was designed for the Internet of Things. It can control hardware remotely, it can display sensor data, it can store data, vizualize it and do many other cool things.

There are three major components in the platform:

- **Blynk App** - allows to you create amazing interfaces for your projects using various widgets we provide.
- **Blynk Server** - responsible for all the communications between the smartphone and hardware. You can use our Blynk Cloud or run your private Blynk server locally. It's open-source, could easily handle thousands of devices and can even be launched on a Raspberry Pi.

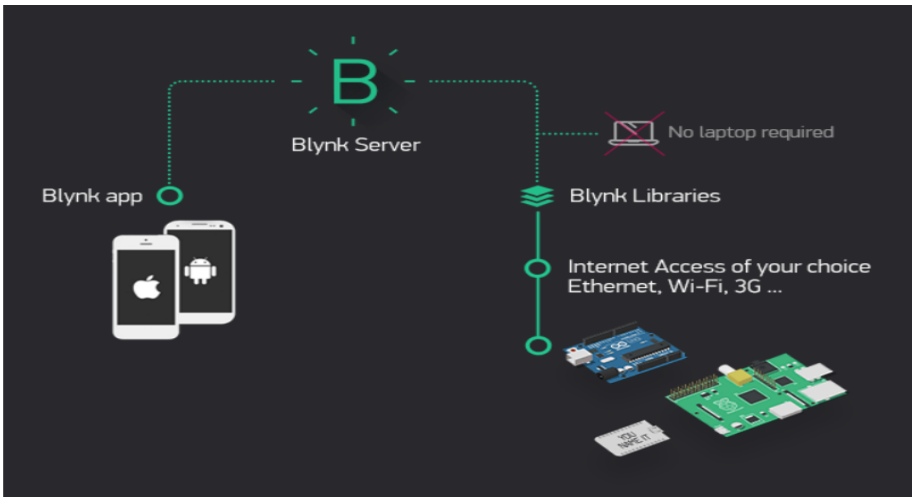

Fig 5.12 Blynk APP

- **Blynk Libraries** - for all the popular hardware platforms - enable communication with the server and process all the incoming and outcoming commands.

Now imagine: every time you press a Button in the Blynk app, the message travels to space the Blynk Cloud, where it magically finds its way to your hardware. It works the same in the opposite direction and everything happens in a blynk of an eye.

- WiFi
- Bluetooth and BLE
- Ethernet
- USB (Serial)
- GSM
- Set of easy-to-use Widgets
- Direct pin manipulation with no code writing
- Easy to integrate and add new functionality using virtual pins
- History data monitoring via Super Chart widget
- Device-to-Device communication using Bridge Widget
- Sending emails, tweets, push notifications, etc.
- New features are constantly added!
- You can find example sketches covering basic Blynk Features. They are included in the library. All the sketches are designed to be easily combined with each other.

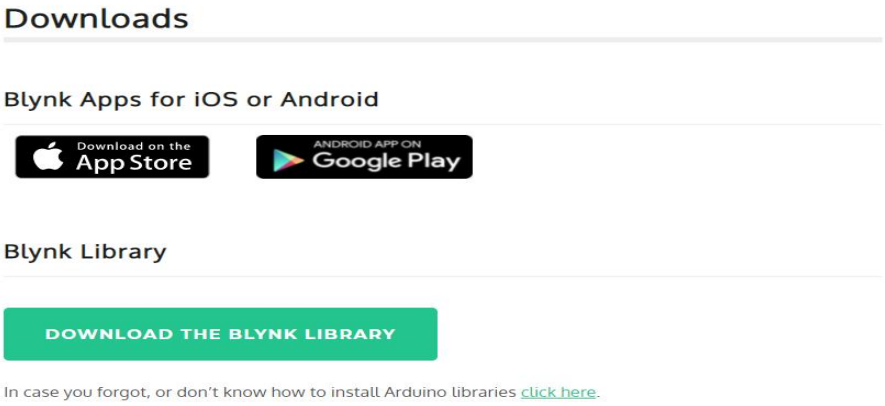

Fig 5.13 Blynk app download

- The Blynk App is a well designed interface builder. It works on both iOS and Android, so no holywars here,

Create a Blynk account

After you download the Blynk App, you'll need to create a New Blynk account. This account is separate from the accounts used for the Blynk Forums, in case you already have one.

We recommend using a **real** email address because it will simplify things later.

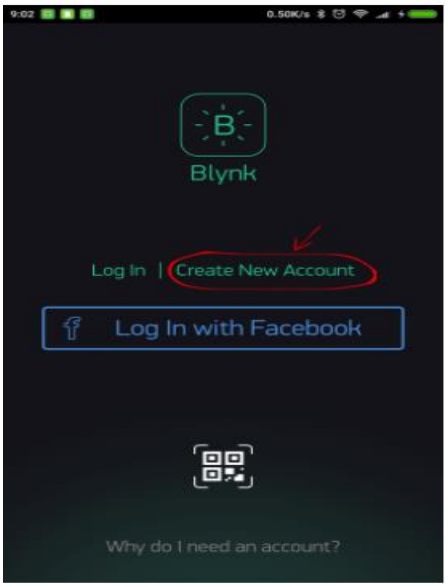

Fig -5.14 Create an account

Create a new project

After you've successfully logged into your account, start by creating a new project.

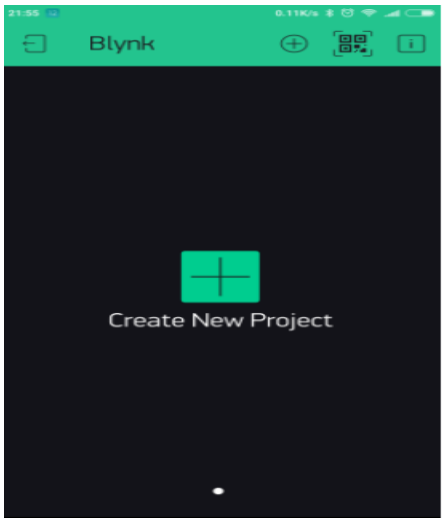

Fig-5.15 Create New project

Choose your hardware

Select the hardware model you will use. Check out the list of supported hardware

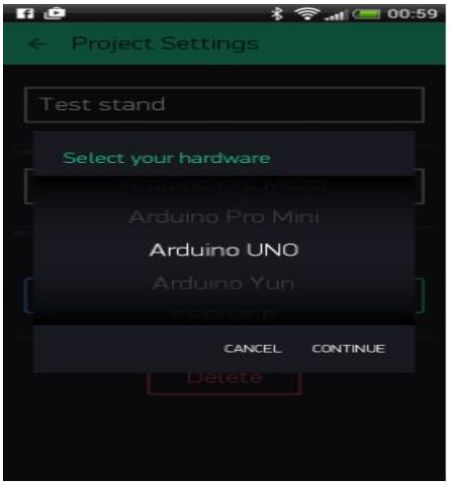

Fig 5.16 Choose your hardware

Auth token

Auth Token is a unique identifier which is needed to connect your hardware to your smartphone. Every new project you create will have its own Auth Token. You'll get Auth Token automatically on your email after project creation. You can also copy it manually

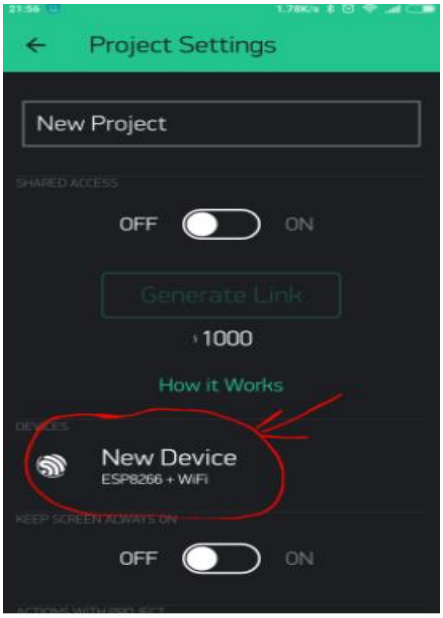

Fig 5.17 New Device

NOTE: Don't share your Auth Token with anyone, unless you want someone to have access to your hardware.It's very convenient to send it over e-mail. Press the e-mail button and the token

will be sent to the e-mail address you used for registration. You can also tap on the Token line and it will be copied to the clipboard.Now press the **"Create"** button.

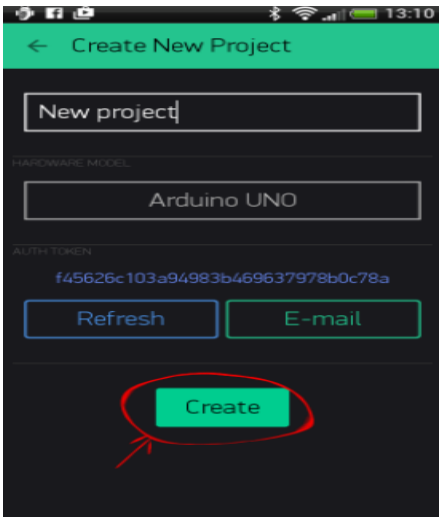

Fig 5.18 Create

Add a widget

Your project canvas is empty, let's add a button to control our LED.

Tap anywhere on the canvas to open the widget box. All the available widgets are located here. Now pick a button.

Widget Box

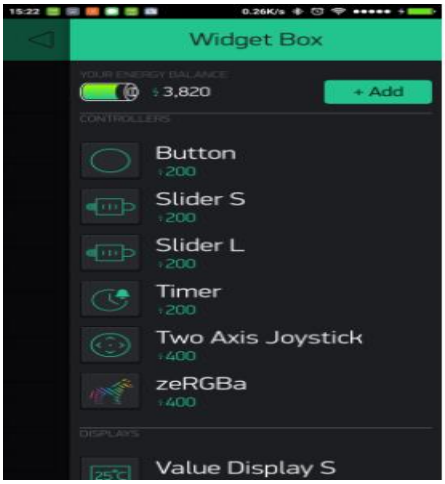

Fig 5.19 Add a widget

Drag-n-Drop - Tap and hold the Widget to drag it to the new position.

Widget Settings - Each Widget has it's own settings. Tap on the widget to get to them.

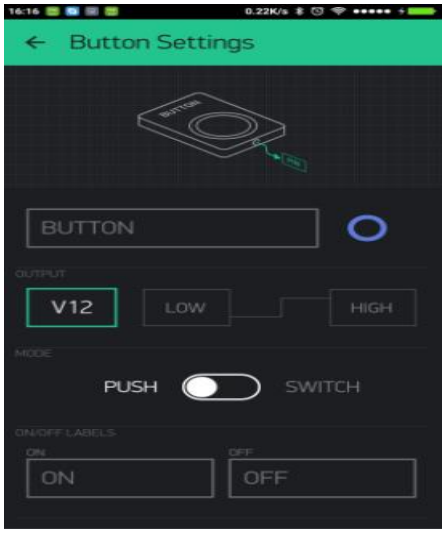

Fig 5.20 Button settings

The most important parameter to set is **PIN** . The list of pins reflects physical pins defined by your hardware. If your LED is connected to Digital Pin 8 - then select **D8** (**D** - stands for **D**igital).

Run the project

When you are done with the Settings - press the **PLAY** button. This will switch you from EDIT mode to PLAY mode where you can interact with the hardware. While in PLAY mode, you won't be able to drag or set up new widgets, press **STOP** and get back to EDIT mode.
You will get a message saying "Arduino UNO is offline". We'll deal with that in the next section

5.3 Installation Of ANACONDA IDE

Anaconda Distribution equips individuals to easily search and install thousands of Python/R packages and access a vast library of community content and support.

Anaconda comes with several IDEs already installed and each provides different features. People have different preferences, but I find most people use either Jupiter Notebook or Spyder.

1. Download the Anaconda installer.

Fig 5.21 Anaconda IDE icon

2. Go to your Downloads folder and double-click the installer to launch. To prevent permission errors, do not launch the installer from the Favorites folder.

Note:If you encounter issues during installation, temporarily disable your anti-virus software during install, then re-enable it after the installation concludes. If you installed for all users, uninstall Anaconda and re-install it for your user only.

3. Click Next.
4. Read the licensing terms and click I Agree.
5. It is recommended that you install for Just Me, which will install Anaconda Distribution to just the current user account. Only select an install for All Users if you need to install for all users' accounts on the computer (which requires Windows Administrator privileges).
6. Click Next.
7. Select a destination folder to install Anaconda and click Next. Install Anaconda to a directory path that does not contain spaces or unicode characters. For more information on destination folders, see the FAQ.Caution Do not install as Administrator unless admin privileges are required.

8. Choose whether to add Anaconda to your PATH environment variable or register Anaconda as your default Python. We don't recommend adding Anaconda to your PATH environment variable, since this can interfere with other software. Unless you plan on installing and running multiple versions of Anaconda or multiple versions of Python, accept the default and leave this box checked. Instead, use Anaconda software by opening Anaconda Navigator or the Anaconda Prompt from the Start Menu.

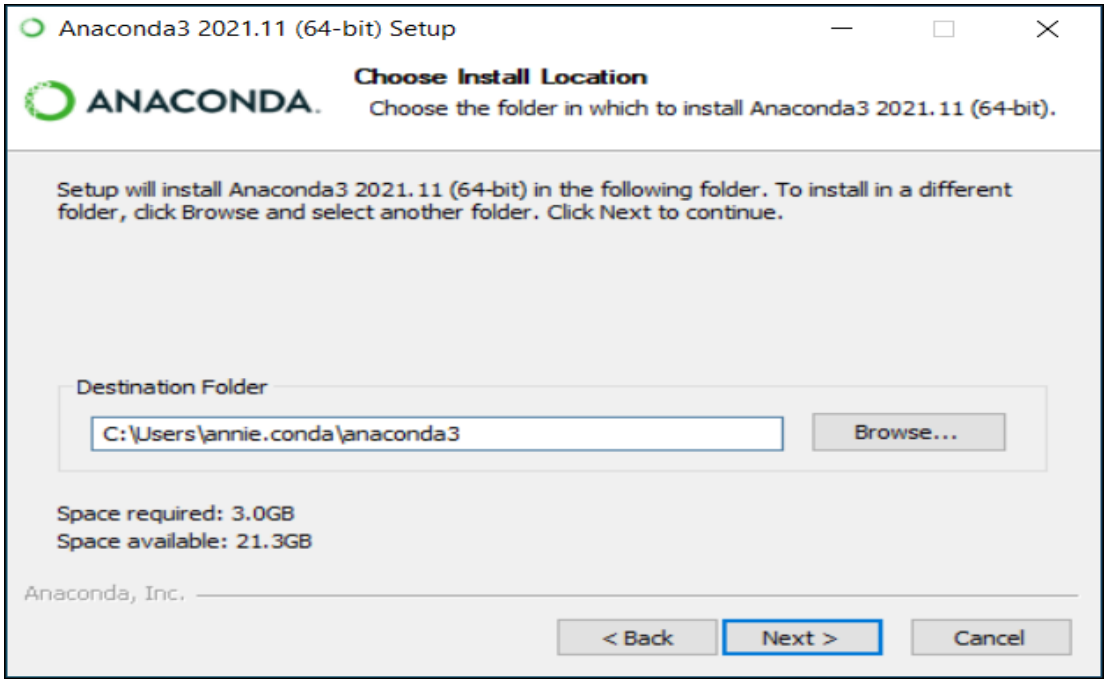

Fig 5.22 Choose Install Location

Note:As of Anaconda Distribution 2022.05, the option to add Anaconda to the PATH environment variable during an All Users installation has been disabled. This was done to address a security exploit. You can still add Anaconda to the PATH environment variable during a Just Me installation.

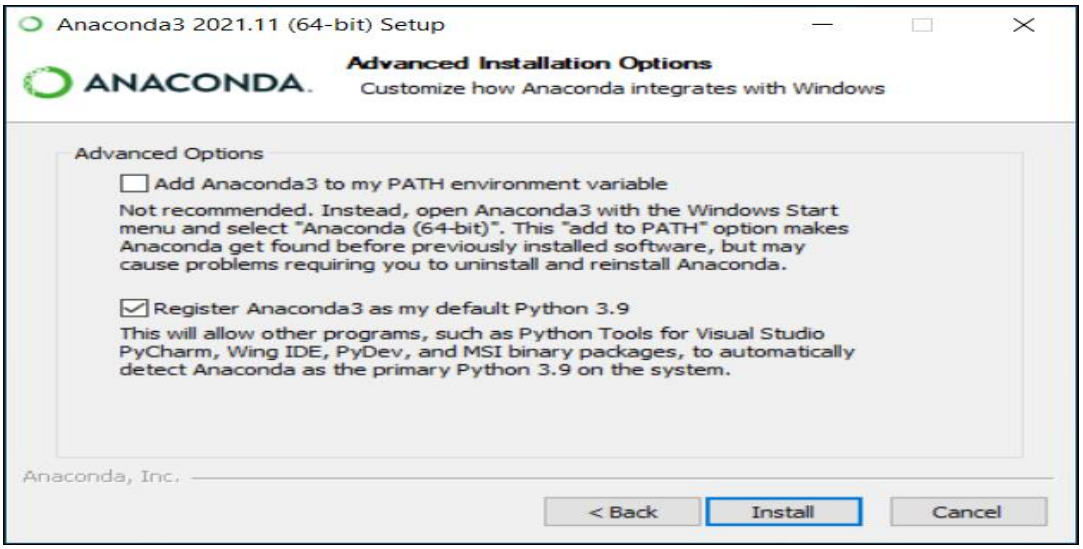

Fig 5.23 Advanced Installation Options

9. **Click** Install**.** If you want to watch the packages Anaconda is installing, click Show Details.
10. Click Next.
11. **Optional:** To learn more about Anaconda's cloud notebook service, go to https://www.anaconda.com/code-in-the-cloud.Or click Continue to proceed.

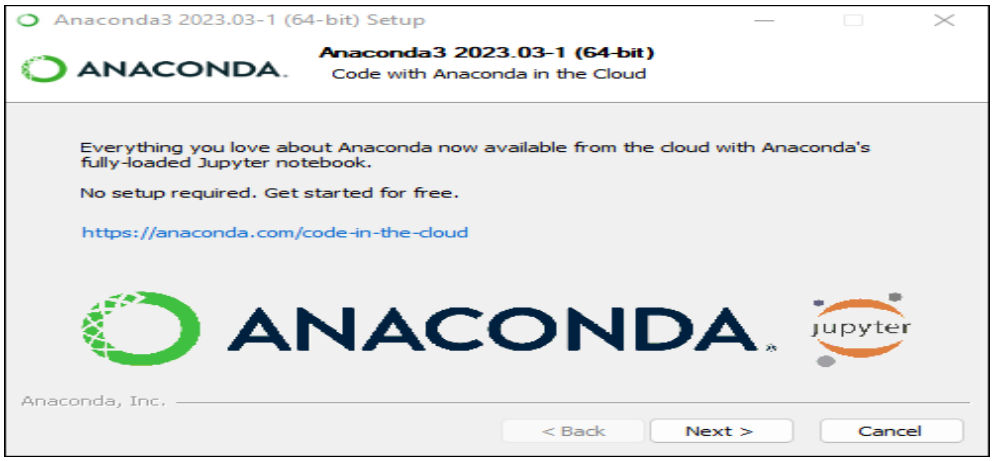

Fig 5.24 Anaconda's Cloud notebook service

12. After a successful installation you will see the "Thanks for installing Anaconda" dialog box:

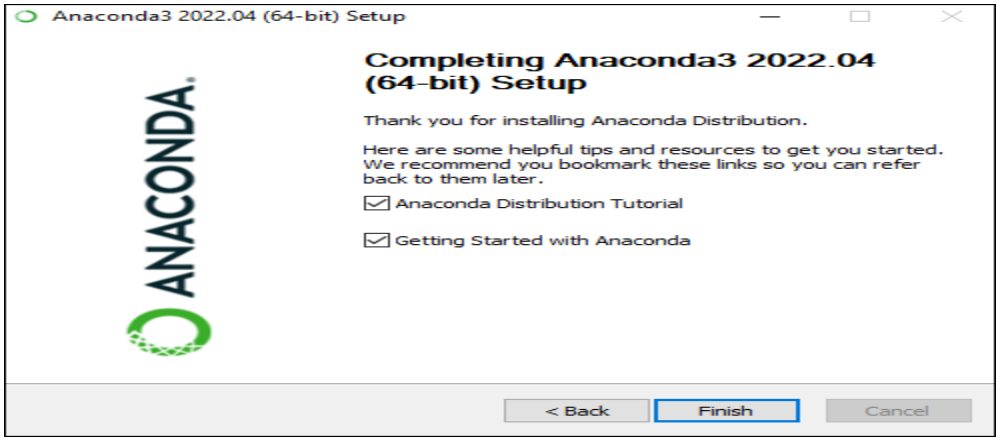

Fig 5.25 Completing Anaconda3

13. If you wish to read more about Anaconda.org and how to get started with Anaconda, check the boxes "Anaconda Distribution Tutorial" and "Learn more about Anaconda". Click the Finish button.

14. Verify your installation.

CHAPTER 6

RESULTS

Face detection can be employed with this door lock system. The facial detection system allows authorized users to log in. Those who do not have access to it, can use nodemcu to log in. The laptop records the image of unauthorized people and sends a notification to the owner. All the data created is saved in the cloud. As a result, the total control is with the cloud.

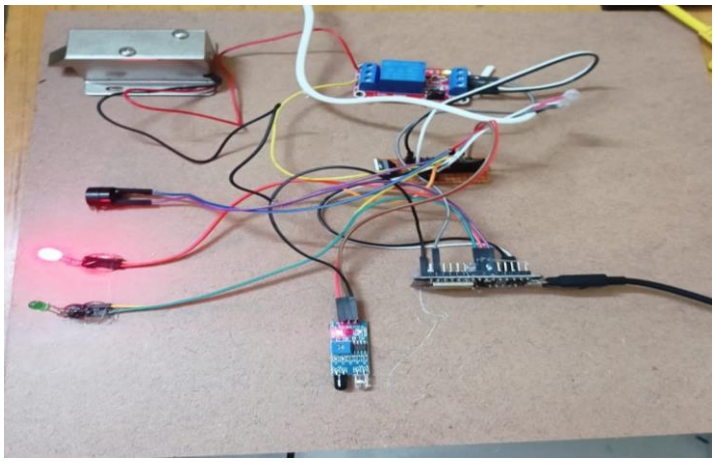

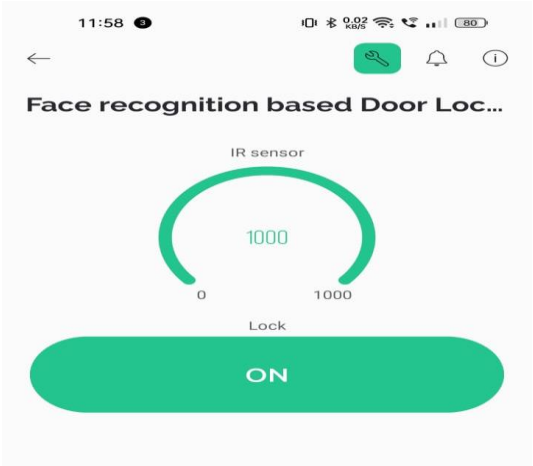

Fig-6.1: Face detection based automatic door opening and closing

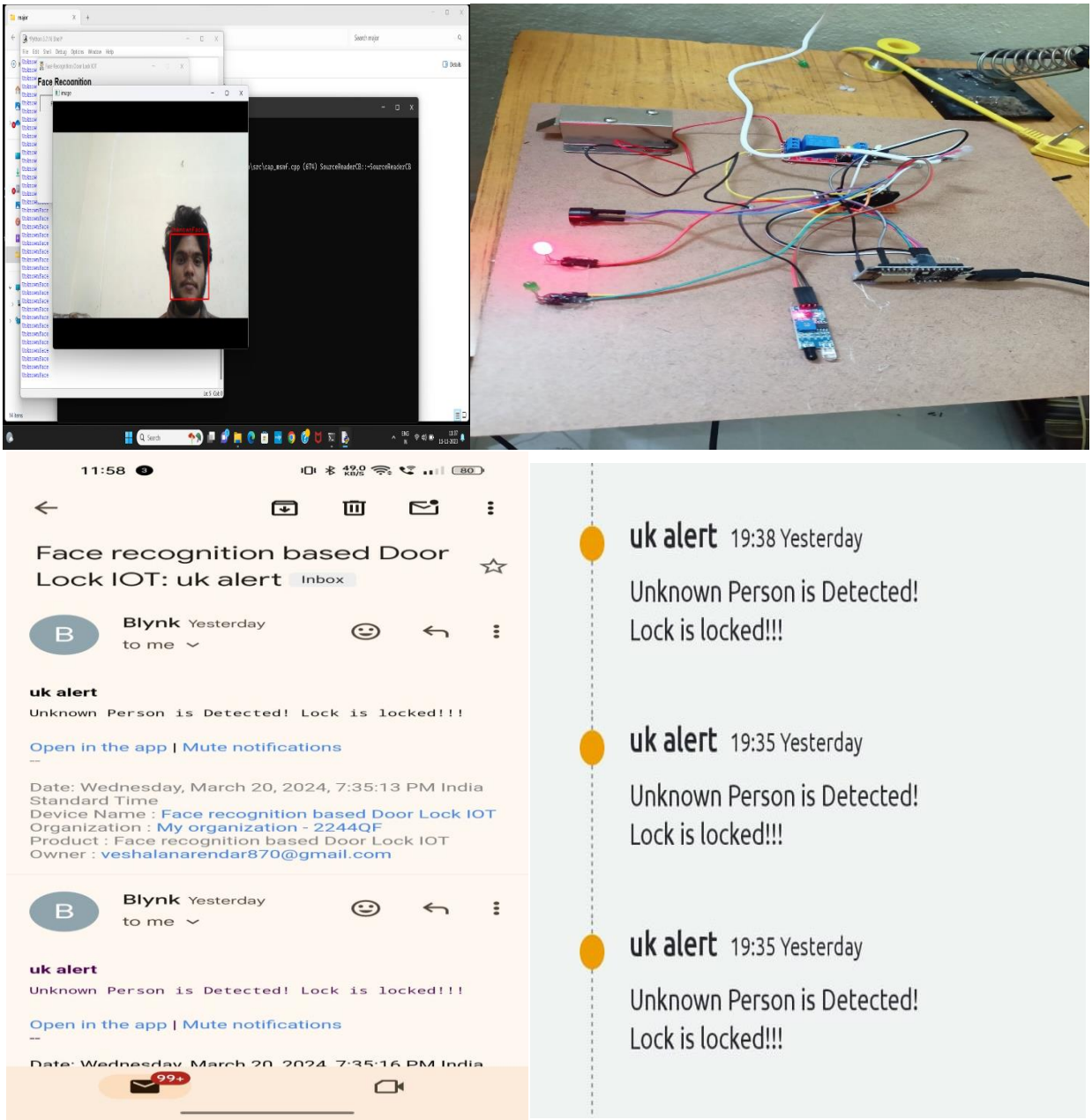

Fig-6.2: Unauthorized person detection

When unauthorized persons face is detected it shows gives alert as shown in the above figure.

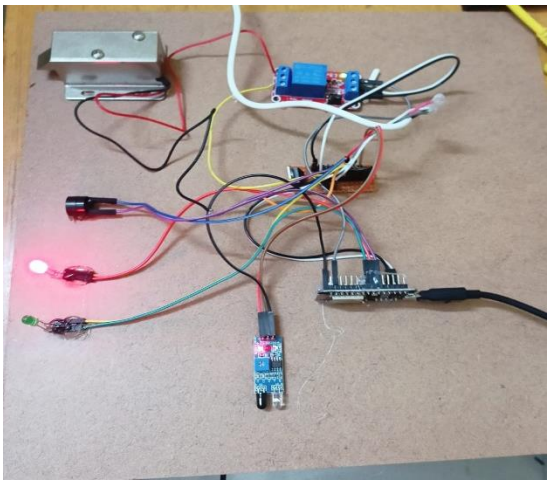

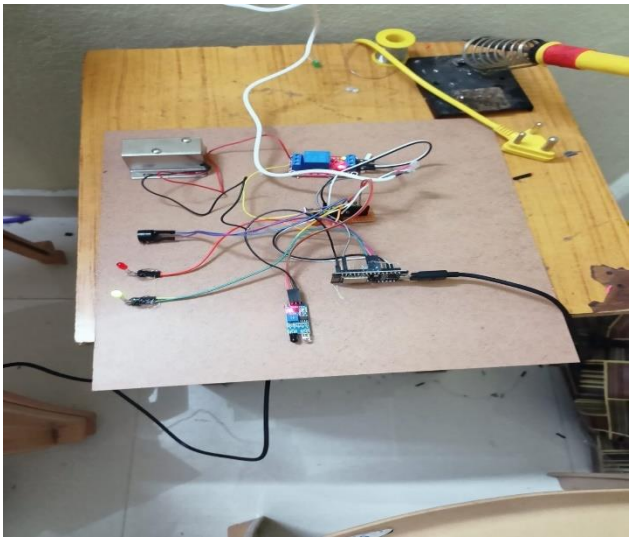

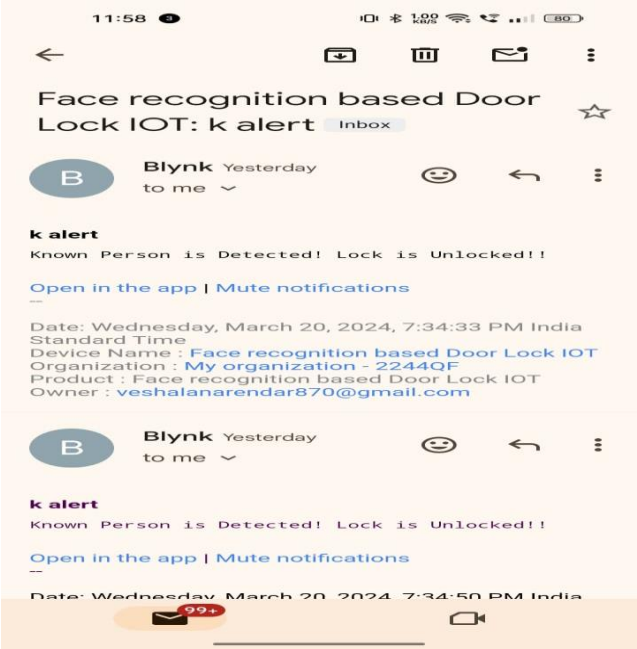
11:58
Face recognition based Door Lock IOT: k alert
Inbox
Blynk Yesterday
to me
k alert
Known Person is Detected! Lock is Unlocked!!
Open in the app | Mute notifications
Date: Wednesday, March 20, 2024, 7:34:33 PM India Standard Time
Device Name : Face recognition based Door Lock IOT
Organization : My organization - 2244QF
Product : Face recognition based Door Lock IOT
Owner : veshalanarendar870@gmail.com
Blynk Yesterday
to me
k alert
Known Person is Detected! Lock is Unlocked!!
Open in the app | Mute notifications

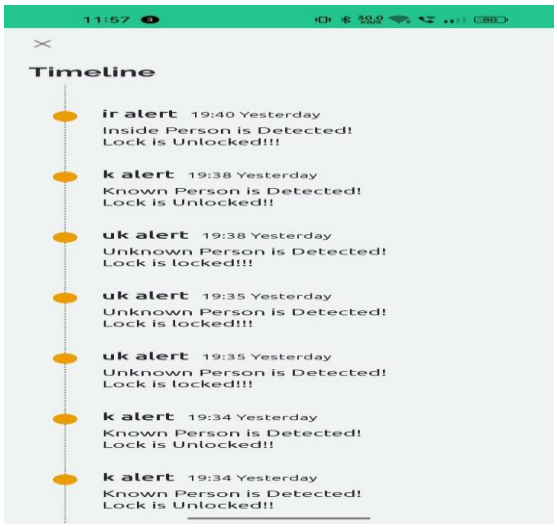
11:57
Timeline
ir alert 19:40 Yesterday
Inside Person is Detected!
Lock is Unlocked!!!
k alert 19:38 Yesterday
Known Person is Detected!
Lock is Unlocked!!
uk alert 19:38 Yesterday
Unknown Person is Detected!
Lock is locked!!!
uk alert 19:35 Yesterday
Unknown Person is Detected!
Lock is locked!!!
uk alert 19:35 Yesterday
Unknown Person is Detected!
Lock is locked!!!
k alert 19:34 Yesterday
Known Person is Detected!
Lock is Unlocked!!
k alert 19:34 Yesterday
Known Person is Detected!
Lock is Unlocked!!

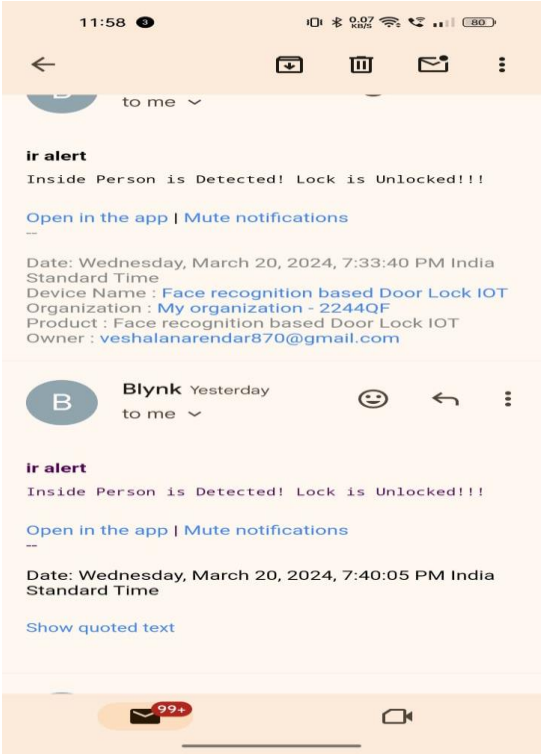

Fig-6.3: Authorized person detection

When Authorized persons face is detected it shows green block around the persons face and opens the door as shown in above figure.

CHAPTER-7

APPLICATIONS AND ADVANTAGES

APPLICATIONS:

- Automobile Security
- Access control
- Immigration
- Education
- Retail
- Healthcare
- Store security and fraud prevention
- Banking and Finance

ADVANTAGES:

- High-level security assurance
- Hands-free access
- Faster service
- Hygienic and safe
- Easy and convenient interface
- Less Time-Consuming
- Protects businesses against theft
- Strengthens security measures

CHAPTER-8

CONCLUSION AND FUTURE SCOPE

CONCLUSION

In this project successful development of a Face Detection Door lock system that monitors the status of the door and boosts the home security is done. The System that we are working on is very easily managed and compiled so we come to the conclusion part. Here we developed a surveillance and security-based system, through this we can avoid unauthorized break-ins and prevention from theft. It can be done by the laptop's web camera, face which is used for capturing the images of an individual to open the door lock.

CCTV was popular lately but, it only provides surveillance facility. Here we will control the break-ins and provide a far better security platform (I.e., door lock after the face recognition) and looking at today's scenario people are avoiding physical contacts due to Co-VID19, it's also very helpful at this point for the safety of an individual. By this technique, we will reduce the physical contact, and cost that is needed for hiring man power for the safety purpose. Little or no coding is required and one can get a system up and running in very less time.

FUTURE SCOPE

- This setup can further be developed into IOT project by using Ethernet Arduino and a Wi-Fi module.
- To improve security, you can also add camera modules to the system. The camera is switched off when someone tries to enter the residence; someone finds and enters the door.
- It can be controlled from anywhere around the globe having feedback from the devices to further improve the energy savings.
- Double Security setup can be possible using this circuit.
- By using AI (Artificial Intelligence) we can control door locks using face detection and for registered faces.
- We can attach a LED display on the door and can share message to the visitors.

REFERENCES

- E. Shirisha, K.M.V Madan Kumar, G. Swarnalatha, IOT BASED HOME SECURITY AND AUTOMATION USING GOOGLE ASSISTANT, Turkish Journal of Computer and Mathematics Education Vol.12 No.6(2021); 117-122.
- J Gal Bally, S Marcel, J Ferez. Image quality assessment for face recognition. IEEE transactions on image processing. 2014; 23: 710-724.
- MA Turk, AP Pentland. Facial recognition using eigen-faces in Computer Vision and Pattern Recognition. CVPR'91. IEEE Computer Society Conference on. 1991; 586-591.
- GJ Edwards, TF Cootes, CJ Taylor. Facial recognition by use of active appearance models in European conference on computer vision. 1998; 581-595.
- G Guo, SZ Li, K Chan. Face detection by support vector machines in automatic facial and gesture recognition. Fourth Proceedings of IEEE International Conference on 2000; 196-201.
- B Moghaddam, T Jabara, A Pentland. Bayesian face recognition, Pattern Recognition. 2000; 33: 1771- 1782.
- OM Parkhi, A Veraldi, A Zisserman. Deep Face Recognition in BMVC. 2015; 6.
- M. N Kamat, Shinde D. Smart Door Lock Control System Using Raspberry Pi. International Journal of Innovations & Advancement in Computer Science. 2017 November; 6(11)

APPENDIX

```
#define BLYNK_TEMPLATE_ID "TMPL3ce0CBeFQ"
#define BLYNK_TEMPLATE_NAME "Face recognition based Door Lock IOT"
#include <Wire.h>
#include <ESP8266WiFi.h>
#include <BlynkSimpleEsp8266.h>
#define BLYNK_AUTH_TOKEN "d7snkIGr3jDzWJVOhE4_9PzUIAyE0u-U"
char auth[] = "d7snkIGr3jDzWJVOhE4_9PzUIAyE0u-U";
char ssid[] = "FACE";  // Enter your wifi name
char pass[] = "123456789";  // Enter your wifi password
int datafromUser=0;
int lock = D4;
int green = D5;
int red = D6;
int buzz = D7;
int ir = A0;
void setup() {
  pinMode(red,OUTPUT);
  pinMode(lock,OUTPUT);
  pinMode(green,OUTPUT);
  pinMode(ir,INPUT);
  pinMode(buzz,OUTPUT);
  // put your setup code here, to run once:
  Serial.begin(9600);
Blynk.begin(auth, ssid, pass);
}
void loop() {
  int ir = analogRead(A0);
  if(ir < 500)
  {
     Serial.println(" lock OFF");
      analogWrite(lock,255);
```

```
        analogWrite(buzz,0);
    digitalWrite(red,LOW);
    digitalWrite(green,HIGH);
      Blynk.email("veshalanarendar870@gmail.com", "Alert", "Unknown Person is Detected!
Lock is locked!!");
    Blynk.logEvent("uk_alert","Unknown Person is Detected! Lock is locked!!!");
   delay(5000);
       analogWrite(lock,255);
        analogWrite(buzz,0);
     digitalWrite(red,HIGH);
       digitalWrite(green,LOW);
  }
  else {
    Serial.println("Lock OFF");
    analogWrite(lock,0);
        analogWrite(buzz,0);
     digitalWrite(red,HIGH);
       digitalWrite(green,LOW);
  }
  Blynk.run();
  // put your main code here, to run repeatedly:
  if(Serial.available() > 0)
  {
    datafromUser=Serial.read();
  }
  if(datafromUser == '2')
  {
    Serial.print("unknown person"); // You can make spaces using well... spaces
      analogWrite(lock,0);
     analogWrite(buzz,255);
      digitalWrite(red,HIGH);
       digitalWrite(green,LOW);
```

```
      Blynk.email("veshalanarendar870@gmail.com", "Alert", "Unknown Person is Detected!
Lock is locked!!");
    Blynk.logEvent("uk_alert","Unknown Person is Detected! Lock is locked!!!");
        delay(3000);
    analogWrite(lock,0);
         analogWrite(buzz,0);
     digitalWrite(red,LOW);
       digitalWrite(green,HIGH);
  }
  else if(datafromUser == '1')
  {
    Serial.print("Known Person"); // You can make spaces using well... spaces
     analogWrite(lock,255);
     analogWrite(buzz,200);
      digitalWrite(red,0);
       digitalWrite(green,HIGH);
    Blynk.email("veshalanarendar870@gmail.com", "Alert", "Known Person is Detected!
Lock is Unlocked!!");
    Blynk.logEvent("k_alert","Known Person is Detected! Lock is Unlocked!!");
    delay(10000);
    analogWrite(lock,0);
         analogWrite(buzz,0);
     digitalWrite(red,HIGH);
       digitalWrite(green,LOW);
  }
  else
  {
    analogWrite(lock,0);
         analogWrite(buzz,0);
     digitalWrite(red,HIGH);
       digitalWrite(green,LOW);
  }
  }
```

```
BLYNK_WRITE(V0) {
  int button = param.asInt(); // read button
  if (button == 1) {
    Serial.println(" lock ON");
      analogWrite(lock,255);
         analogWrite(buzz,200);
    digitalWrite(red,LOW);
    digitalWrite(green,HIGH);
  }
  else {
    Serial.println("Lock OFF");
    analogWrite(lock,0);
         analogWrite(buzz,0);
     digitalWrite(red,HIGH);
       digitalWrite(green,LOW);
  }
}
from Detector import main_app
from create_classifier import train_classifer
from create_dataset import start_capture
import tkinter as tk
from tkinter import font as tkfont
from tkinter import messagebox,PhotoImage
names = set()
class MainUI(tk.Tk):
    def __init__(self, *args, **kwargs):
        tk.Tk.__init__(self, *args, **kwargs)
        global names
        with open("nameslist.txt", "r") as f:
            x = f.read()
            z = x.rstrip().split(" ")
            for i in z:
                names.add(i)
```

```
        self.title_font = tkfont.Font(family='Helvetica', size=16, weight="bold")
        self.title("Face Recognition Door Lock IOT")
        self.resizable(False, False)
        self.geometry("500x250")
        self.protocol("WM_DELETE_WINDOW", self.on_closing)
        self.active_name = None
        container = tk.Frame(self)
        container.grid(sticky="nsew")
        container.grid_rowconfigure(0, weight=1)
        container.grid_columnconfigure(0, weight=1)
        self.frames = {}
        for F in (StartPage, PageOne, PageTwo, PageThree, PageFour):
            page_name = F.__name__
            frame = F(parent=container, controller=self)
            self.frames[page_name] = frame
            frame.grid(row=0, column=0, sticky="nsew")
        self.show_frame("StartPage")
    def show_frame(self, page_name):
            frame = self.frames[page_name]
            frame.tkraise()
    def on_closing(self):
        if messagebox.askokcancel("Quit", "Are you sure?"):
            global names
            f =  open("nameslist.txt", "a+")
            for i in names:
                    f.write(i+" ")
            self.destroy()
class StartPage(tk.Frame):
        def __init__(self, parent, controller):
            tk.Frame.__init__(self, parent)
            self.controller = controller
            render = PhotoImage(file='homepagepic.png')
            img = tk.Label(self, image=render)
```

```
            img.image = render
            img.grid(row=0, column=1, rowspan=4, sticky="nsew")
            label = tk.Label(self, text="        Home Page        ",
font=self.controller.title_font,fg="#263942")
            label.grid(row=0, sticky="ew")
            button1 = tk.Button(self, text="   Add a User  ", fg="#ffffff",
bg="#263942",command=lambda: self.controller.show_frame("PageOne"))
            button2 = tk.Button(self, text="   Check a User  ", fg="#ffffff",
bg="#263942",command=lambda: self.controller.show_frame("PageTwo"))
            button3 = tk.Button(self, text="Quit", fg="#263942", bg="#ffffff",
command=self.on_closing)
            button1.grid(row=1, column=0, ipady=3, ipadx=7)
            button2.grid(row=2, column=0, ipady=3, ipadx=2)
            button3.grid(row=3, column=0, ipady=3, ipadx=32)
        def on_closing(self):
            if messagebox.askokcancel("Quit", "Are you sure?"):
                global names
                with open("nameslist.txt", "w") as f:
                    for i in names:
                        f.write(i + " ")
                self.controller.destroy()
class PageOne(tk.Frame):
    def __init__(self, parent, controller):
        tk.Frame.__init__(self, parent)
        self.controller = controller
        tk.Label(self, text="Enter the name", fg="#263942", font='Helvetica 12
bold').grid(row=0, column=0, pady=10, padx=5)
        self.user_name = tk.Entry(self, borderwidth=3, bg="lightgrey", font='Helvetica 11')
        self.user_name.grid(row=0, column=1, pady=10, padx=10)
        self.buttoncanc = tk.Button(self, text="Cancel", bg="#ffffff", fg="#263942",
command=lambda: controller.show_frame("StartPage"))
        self.buttonext = tk.Button(self, text="Next", fg="#ffffff", bg="#263942",
command=self.start_training)
```

```
        self.buttoncanc.grid(row=1, column=0, pady=10, ipadx=5, ipady=4)
        self.buttonext.grid(row=1, column=1, pady=10, ipadx=5, ipady=4)
    def start_training(self):
        global names
        if self.user_name.get() == "None":
            messagebox.showerror("Error", "Name cannot be 'None'")
            return
        elif self.user_name.get() in names:
            messagebox.showerror("Error", "User already exists!")
            return
        elif len(self.user_name.get()) == 0:
            messagebox.showerror("Error", "Name cannot be empty!")
            return
        name = self.user_name.get()
        names.add(name)
        self.controller.active_name = name
        self.controller.frames["PageTwo"].refresh_names()
        self.controller.show_frame("PageThree")
class PageTwo(tk.Frame):
    def __init__(self, parent, controller):
        tk.Frame.__init__(self, parent)
        global names
        self.controller = controller
        tk.Label(self, text="Select user", fg="#263942", font='Helvetica 12 bold').grid(row=0,
column=0, padx=10, pady=10)
        self.buttoncanc = tk.Button(self, text="Cancel", command=lambda:
controller.show_frame("StartPage"), bg="#ffffff", fg="#263942")
        self.menuvar = tk.StringVar(self)
        self.dropdown = tk.OptionMenu(self, self.menuvar, *names)
        self.dropdown.config(bg="lightgrey")
        self.dropdown["menu"].config(bg="lightgrey")
        self.buttonext = tk.Button(self, text="Next", command=self.nextfoo, fg="#ffffff",
bg="#263942")
```

```
        self.dropdown.grid(row=0, column=1, ipadx=8, padx=10, pady=10)
        self.buttoncanc.grid(row=1, ipadx=5, ipady=4, column=0, pady=10)
        self.buttonext.grid(row=1, ipadx=5, ipady=4, column=1, pady=10)
    def nextfoo(self):
        if self.menuvar.get() == "None":
            messagebox.showerror("ERROR", "Name cannot be 'None'")
            return
        self.controller.active_name = self.menuvar.get()
        self.controller.show_frame("PageFour")
    def refresh_names(self):
        global names
        self.menuvar.set('')
        self.dropdown['menu'].delete(0, 'end')
        for name in names:
            self.dropdown['menu'].add_command(label=name, command=tk._setit(self.menuvar,
name))
class PageThree(tk.Frame):
    def __init__(self, parent, controller):
        tk.Frame.__init__(self, parent)
        self.controller = controller
        self.numimglabel = tk.Label(self, text="Number of images captured = 0",
font='Helvetica 12 bold', fg="#263942")
        self.numimglabel.grid(row=0, column=0, columnspan=2, sticky="ew", pady=10)
        self.capturebutton = tk.Button(self, text="Capture Data Set", fg="#ffffff",
bg="#263942", command=self.capimg)
        self.trainbutton = tk.Button(self, text="Train The Model", fg="#ffffff",
bg="#263942",command=self.trainmodel)
        self.capturebutton.grid(row=1, column=0, ipadx=5, ipady=4, padx=10, pady=20)
        self.trainbutton.grid(row=1, column=1, ipadx=5, ipady=4, padx=10, pady=20)
    def capimg(self):
        self.numimglabel.config(text=str("Captured Images = 0 "))
        messagebox.showinfo("INSTRUCTIONS", "We will Capture 300 pic of your Face.")
        x = start_capture(self.controller.active_name)
```

```
        self.controller.num_of_images = x
        self.numimglabel.config(text=str("Number of images captured = "+str(x))
    def trainmodel(self):
        if self.controller.num_of_images < 300:
            messagebox.showerror("ERROR", "No enough Data, Capture at least 300 images!")
            return
        train_classifer(self.controller.active_name)
        messagebox.showinfo("SUCCESS", "The modele has been successfully trained!")
        self.controller.show_frame("PageFour")
class PageFour(tk.Frame):
    def __init__(self, parent, controller):
        tk.Frame.__init__(self, parent)
        self.controller = controller
        label = tk.Label(self, text="Face Recognition", font='Helvetica 16 bold')
        label.grid(row=0,column=0, sticky="ew")
        button1 = tk.Button(self, text="Face Recognition", command=self.openwebcam,
fg="#ffffff", bg="#263942")
        button4 = tk.Button(self, text="Go to Home Page", command=lambda:
self.controller.show_frame("StartPage"), bg="#ffffff", fg="#263942")
        button1.grid(row=1,column=0, sticky="ew", ipadx=5, ipady=4, padx=10, pady=10)
        button4.grid(row=1,column=1, sticky="ew", ipadx=5, ipady=4, padx=10, pady=10)
    def openwebcam(self):
        main_app(self.controller.active_name)
app = MainUI()
app.iconphoto(False, tk.PhotoImage(file='icon.ico'))
app.mainloop()
```