FM Colpitts Oscillator Transmitter
Design, Implementation, and Analysis

Sai Krishna Bakki – EE25BTECH11049
Adharvan K.B – EE25BTECH11003

CONTENTS

]

INTRODUCTION

The Colpitts oscillator is one of the most widely used LC oscillator topologies in radio-frequency (RF) circuit design. Named after Edwin Colpitts (1918), it employs a *capacitive voltage divider* in its tank circuit to provide the feedback required for sustained oscillation.

In this project, a Colpitts oscillator is implemented using a 2N2222 NPN BJT powered from a 9–12 V supply. A microphone is connected at the input to frequency-modulate the carrier, enabling the circuit to function as a simple FM transmitter. The modulated RF output is delivered to an antenna through a coupling capacitor.

OVERVIEW

Since the Colpitts oscillator uses two capacitors to form the feedback voltage divider, the circuit topology naturally provides the 180° phase shift required (alongside the transistor's inherent 180° collector inversion) to satisfy the Barkhausen phase criterion.

The oscillation frequency is determined by the LC tank circuit:

$$f_0 = \frac{1}{2\pi\sqrt{L \cdot C_{eq}}} \tag{1}$$

where C_{eq} is the series combination of the two feedback capacitors C_2 and C_3:

$$C_{eq} = \frac{C_2 \cdot C_3}{C_2 + C_3} \tag{2}$$

FM operation is achieved because the microphone audio signal modulates the effective capacitance seen by the tank, thereby shifting f_0 in proportion to the instantaneous audio amplitude.

CIRCUIT DESIGN

The complete circuit consists of four sub-blocks: the DC bias network, the microphone audio input network, the LC tank (oscillator core), and the antenna output coupling stage.

A. DC Bias Network

The 2N2222 NPN transistor is biased in the class-A active region using a voltage-divider network. Taking $V_{CC} = 10\,\text{V}$ (mid-range of 9–12 V) and $V_{BE} \approx 0.7\,\text{V}$:

Component	Symbol	Value	Function
Supply voltage	V_{CC}	9–12 V	Power
Bias resistor 1	R_1	5.5 kΩ	Upper divider
Bias resistor 2	R_2	10 kΩ	Lower divider
Emitter resistor	R_E	1 kΩ	Bias stability

$$V_B = V_{CC} \cdot \frac{R_2}{R_1 + R_2} = 10 \times \frac{10}{5.5 + 10} \approx 6.45 \text{ V} \tag{3}$$

$$I_C \approx \frac{V_B - V_{BE}}{R_E} = \frac{6.45 - 0.7}{1000} \approx 5.75 \text{ mA} \tag{4}$$

B. Microphone Input Network

The electret microphone AC output is coupled to the transistor base through 1 kΩ series resistor and 0.47 μF coupling capacitor. This network blocks DC from the microphone path while allowing audio-frequency signals to modulate the base bias. The high-pass corner frequency is:

C. Tank Circuit

The tank circuit is the oscillator core and determines the carrier frequency. It consists of the inductor L between V_{CC} and the collector, blocking capacitor C_1 for RF bypassing, and feedback capacitors C_2 (collector side) and C_3 (emitter side).

Component	Symbol	Value	Role
Inductor	L	100 nH	Tank inductor
Blocking cap	C_1	1 nF	RF bypass
Feedback cap 1	C_2	39 pF	Collector node
Feedback cap 2	C_3	56 pF	Emitter node

The series equivalent feedback capacitance from Eq. **??**:

$$C_{eq} = \frac{C_2 \times C_3}{C_2 + C_3} = \frac{39 \times 56}{39 + 56} \approx 23 \text{ pF} \tag{5}$$

Substituting $L = 100\,\text{nH}$ and $C_{eq} = 23\,\text{pF}$ into Eq. **??**:

$$f_0 = \frac{1}{2\pi\sqrt{100 \times 10^{-9} \ \times \ 23 \times 10^{-12}}} \approx \boxed{105 \text{ MHz}} \tag{6}$$

This places the carrier in the VHF band, suitable for short-range wireless transmission.

BARKHAUSEN CRITERION

For a stable, self-sustaining oscillation two conditions must be simultaneously satisfied around the feedback loop:

$$|\beta_{fb} \cdot A_v| = 1 \qquad \text{and} \qquad \angle(\beta_{fb} \cdot A_v) = 0^\circ \tag{7}$$

A. Phase Condition

The common-emitter BJT introduces a 180° phase shift between the base (input) and collector (output). The capacitive divider (C_2, C_3) feeds back from the emitter side, introducing a further 180° phase reversal. The total loop phase shift is therefore 360°, satisfying the phase condition exactly.

B. Gain Condition

The capacitive feedback factor is:

$$\beta_{fb} = \frac{C_2}{C_3} = \frac{39}{56} \approx 0.696 \tag{8}$$

The minimum transistor voltage gain required for oscillation:

$$A_v \;\geq\; \frac{1}{\beta_{fb}} = \frac{C_3}{C_2} = \frac{56}{39} = 1.435 \tag{9}$$

The 2N2222 in common-emitter configuration achieves $A_v \gg 1.43$, so the gain condition is comfortably satisfied.

SIMULATION

A. SPICE Netlist

The circuit is simulated in `LTspice` using the exact component values:

```
* FM Colpitts Oscillator -- 2N2222
* VCC = 10V (mid of 9-12V range)
VCC  VCC  0    DC 10
R1   VCC  NA   5.5k
R2   NA   0    10k
Rmic NA   NB   1k
Cc   NB   BASE 0.47u
C1   VCC  BASE 1n
L1   VCC  COL  100n
Q1   COL  BASE EMI 0 2N2222
C2   COL  ANT  39p
C3   EMI  0    56p
RE   EMI  0    1k
.model 2N2222 NPN(Bf=255 Vaf=100
+  Cje=25p Cjc=9p Tf=0.6n)
.tran 0.01n 300n
.probe V(COL) V(ANT)
.end
```

Listing 1: FM Colpitts SPICE netlist (exact values)

B. Expected Waveforms

After transient simulation converges:

- Collector voltage oscillates sinusoidally at ≈ 105 MHz.
- Startup transient settles within ≈20–50 ns.
- Amplitude stabilises as the transistor enters mild nonlinear limiting.

C. Practical Waveforms

In Practice, We dont get our desired frequency due to parasitic capacitances of breadboard. We are getting waveform as below:

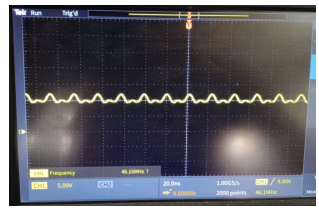

Figure 1: Oscillator Waveform

FM MODULATION MECHANISM

The microphone produces audio voltage $v_m(t)$. Passed through the 1 kΩ–0.47 μF network, it appears as δV_B on the base. This shifts the base–emitter junction capacitance C_{je} of the 2N2222, which appears in parallel with C_3:

$$C_{eq}(t) = \frac{C_2\,[C_3 + C_{je}(t)]}{C_2 + C_3 + C_{je}(t)} \tag{10}$$

This produces an instantaneous frequency deviation proportional to the audio signal:

$$\Delta f(t) \approx k_f \cdot v_m(t) \tag{11}$$

where k_f (Hz/V) is the modulation sensitivity determined by the transistor bias point and the slope of $C_{je}(V_{BE})$.

OUTPUT AND ANTENNA COUPLING

The RF output is taken from the collector through $C_2 = 10$ pF. The reactance of C_2 at the carrier frequency:

RESULTS SUMMARY

Parameter	Value	Source
Inductor L	100 nH	Design
Feedback cap C_2	39 pF	Design
Feedback cap C_3	56 pF	Design
Equiv. cap C_{eq}	23 pF	Eq. **??**
Carrier freq. f_0	105 MHz	Eq. **??**
Feedback factor β_{fb}	0.696	C_2/C_3
Min. gain A_v	1.43	Barkhausen
Audio HP corner f_{hp}	339 Hz	RC network
Supply V_{CC}	9–12 V	Design
Transistor	2N2222 NPN	Design

OBSERVATIONS

- Initially, We couldnt obtain the frequency of FM band with the circuit given to us and then we got to know that one of the inductor in the tank circuit that creates the carrier wave had a much higher inductance. We thought of replacing with $100mH$.
- After that we found out that the inductor with that value was hard to obtain.And also from research we got to the fact that inductors with air medium are a better choice for the FM transmitter.
- We started making the inductors with copper wires of desired dimensions and suitable turns and we have assumed 4-5 turns of coil is approximately 100nH.
- For FM Circuits, it is highly recommended to use Air Coil Inductor and try to avoid fixed inductors.
- As we have made a Air coil Inductor, the circuit is highly sensitive so dont touch the inductor or the circuit wirings while transmiting audio.
- We may not receive our transmitted signal in our Theoretical Frequency so use a RTL-SDR to see at which frequency, we are transmitting the signal.
- To change frequency of transmitted signal, change values in tank circuit.

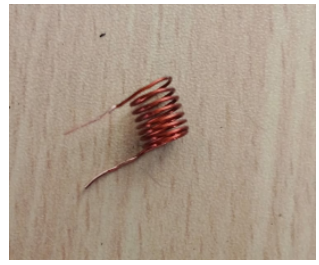

Figure 2: Air Coil Inductor of 4-5 turns

CONCLUSION

The FM Colpitts oscillator was designed and analysed using the component values: $L = 100\,\text{nH}$, $C_2 = 10\,\text{pF}$, $C_3 = 12\,\text{pF}$, yielding:

- Carrier frequency $f_0 \approx$ **105 MHz**.
- Barkhausen gain condition satisfied: required $A_v \geq 1.43$, well within the 2N2222 capability.
- Microphone input network passes audio , modulating the carrier via junction capacitance variation.
- We can use a jumper cable or stool wires of length 15cm.
- If we want to remove noise to zero in the transmiited signal, we need to amplify mic signals using another BJT(n-p-n) Transistor to make audio amplifier.

Future work includes measuring the actual oscillation frequency on a spectrum analyser, quantifying the frequency deviation with a known audio tone, and designing a shielded PCB to reduce harmonic radiation.

CIRCUIT DIAGRAM

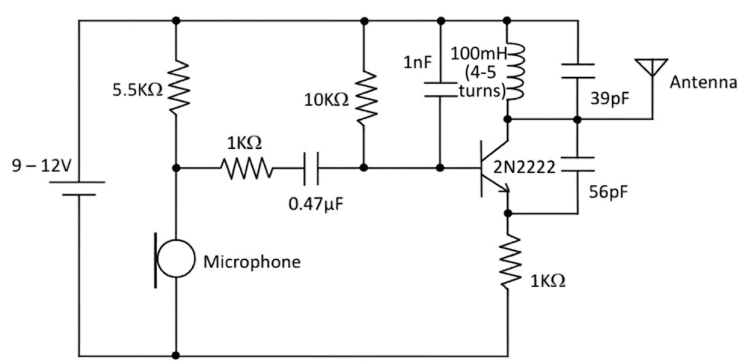

Figure 3: FM Colpitts