High-Heat Mars CO_2 Venting Cooling System

Principal Investigator
Sainirnay Mantrala
Mechanical & Aerospace Engineering
University of California San Diego
smantrala@ucsd.edu
(510) 826-8199

Subject Matter Expert
Dr. Kuan-Lin Lee
kuan-lin.lee@1-act.com
(717) 205-0631

Team Members
Nancy Luu, Computer Science, University of Houston
Clayton Ness, Agricultural Engineering, Purdue University
Jay Kamdar, Aerospace Engineering, Missouri University of Science & Technology
Bryan Liu, Mechanical Engineering, University of Illinois Urbana-Champaign
Takudzwa Modza, Computer Science, Alabama State University
Calynn Lock, Mechanical & Aerospace Engineering, Texas A&M University
Angela Rallos, Electrical Engineering, California State University, Long Beach
Sumesh Surendran, Artificial Intelligence, Houston Community College
Luis Guevara, Computer Engineering Technology, University of Houston
Dhruv Patel, Mechatronics, Texas A&M University

Applicable Taxonomy Identifiers
TX07.1.3 (Resource Processing for Production of Mission Consumables)
TX14.1.3 (Thermal Conditioning for Sensors, Instruments, & High Efficiency Electric Motors)

Organizational Chart

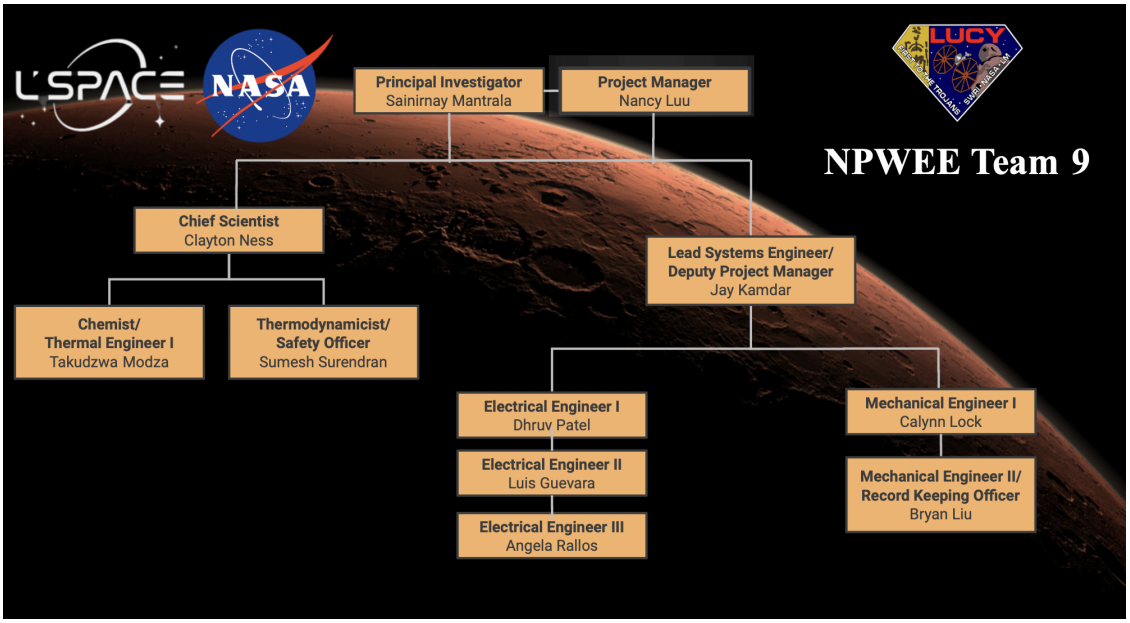

Abstract

One of NASA's key initiatives during this century has been to expand on the exploration of Mars in surveying its environment, landscape, & resources for future manned mission exploitation. Thorough thermal management is necessary on Mars missions because of Mar's thin atmosphere & cold climate demands heating to keep electronics warm. However, it is also important to make them not overheat, because Mar's thin atmosphere does not provide strong enough convection to naturally cool them. In this manner, heating technology has revolved around insulating excess heat while cooling technology has employed closed-loop coolant circulation systems. As Mars missions continue in the future, insulating technology may remain as the standard, but fluid loop cooling systems may not always be optimal. As exploration & excavation continue, there will be growing use for high-power but short-term usage technology, such as imaging sensors, gas sensors, & smaller subsystems of exploratory systems. A more short term cooling system would be most effective in managing these types of devices.

The proposed innovation is a venting cooling unit that leverages CO_2 from Mars' atmosphere as the cooling fluid to dissipate periods of high amounts of heat. Cold, night-time CO_2 gas will be taken into a chamber & condensed into a solid state. Maintaining pressure & temperature, the solid CO_2 will be stored in the chamber throughout the day until a said electronic system requires cooling. When cooling is needed, excess heat from the system will be directed to the chamber, where it will be absorbed & inflict a state change of the CO_2. The high pressured CO_2 gas remaining can also be used for additional purposes such as cleaning or decontamination.

With the $10,000 received from NASA, Team 9 would create a basic prototype of the Martian CO_2 Venting Cooling System. It will test the intake process of CO_2 from a generalized Martian environment, the deposition system, & sublimation system from an introduced heat source. The plan to execute the project is by building in stages that are scheduled to take into account each team member's schedule. The timeline for the deliverable will be from September 2023 - June 2024.

Technology Merit & Work Plan

The CO_2 Venting Cooling System is an open cooling system that acts by intaking CO_2 from the Martian atmosphere at the coldest time of a Martian Sol, pressurizing it into a solid, & then when the hot system needs cooling, the CO_2 absorbs the heat & sublimates. This system serves as a cooling mechanism for non-mission-critical systems on robots that produce high Wattage for short periods of time, such as imaging sensors, gas sensors, & smaller subsystems. Beyond robots, this system can also find applications in flash freezing of food for preservation or habitat cooling. The high-pressure waste CO_2 vapor could also be repurposed for dust management, cooling of metal for metalworking, or general cleaning.

The SOA for general heat dissipation is closed loop fluid systems, such as the CFC coolant loop employed on the Curiosity Mars Rover's heat rejection system. This system utilizes CFC as a working medium to transfer heat from the thermoelectric generator, to the radiators, & then out to the environment. In this way, fluid loop cooling has become a common standard for general heat dissipation.

For high-power, but short-term usage technology, however, fluid loop cooling systems would not be the most effective thermal management. The latent heat of phase changes is much higher than the energy stored by specific heat over a temperature change, & phase changes operate isothermally. Using the Curiosity rover cooling system for reference, CO_2's heat of sublimation is 32.3 kJ/mol, while CFC's specific heat is around 0.12 kJ/mol.K between -20 to 20°C. On the Curiosity rover, CFC fluid is maintained between -7°C & 0°C, meaning the coolant only dissipates around 0.84 kJ/mol across a 7°C temperature change. For continuous cooling, this small heat absorption can be effective over time, but for set working periods, CO_2's high latent heat makes for a much stronger option.

Even if a strong coolant like CFC was implemented in a two-phase liquid loop, its heat of vaporization is around 25.2 kJ/mol, which is still less than CO_2. Other general limitations of fluid loop systems are that for electronics that are not in constant use, constantly circulating fluids would also unnecessarily expend energy from fluid pumps. Using CO_2 from the environment, there is also no need to transport coolant fluid to Mars, reducing resource costs & propulsion mass.

The intent of this invention is not to supplant the SOA for all applications, but rather supplement it for future missions. The metrics for the prototype design is a system that is capable of absorbing 100 Watts of heat for a period of 3 hours, which can be scaled depending on design needs.

If selected, NPWEE Team 9 will begin the manufacturing of the prototype system in September of 2023. The team will meet remotely weekly to work on the design, testing, & acquisition of material for manufacturing for three months (December 2023) & then begin the preparation for moving to location to construct the prototype. With the weekends that Team 9 has, considering the members are all full time students, the project will slowly be constructed over the course of around 9 months (including breaks for Nationally recognized holidays & university breaks). Team 9 will have periods of design progress & review throughout the year in order to complete the project. Intended project completion is in June of 2024.

The implementation of this technology should be as simple as integrating the code within the robot or system's computer program, creating space on the robot or larger system, & connecting to the power source for designed efficiency. For launch, of course a constraint is the weight of the system, but as stated previously, the cost of launching will easily be justified due to the cooling capacity of the design & its multi-faceted usage. Another challenge for the design of this technology is gaining access to sufficient facilities to test the efficiency of the system. Without a large vacuum chamber that can control the atmospheric composition, the system will have to wait for validation when Man becomes a resident on Mars. Finally, the last major challenge currently foreseen is the usage of a compressor that can take in an extremely low inlet pressure (~700 Pa) & compress it into the 100 kPa needed for deposition to occur.

For a team that initially banded together over a shared love of robotics, ending up with a thermodynamics project was quite a difficult change of pace for most. The learning curve will pose some key technical challenges for Team 9, starting with educating members on the thermodynamic principles & thermal engineering. Once basic fluency is developed, the next challenge will be training skills in working with manufacturing equipment & power tools. Working certain machinery may also involve certification, which members would have to work towards. The third challenge will be acquiring safety certifications for handling cryogenic fluid & high risk skills like welding . Risks for this project include handling equipment at extreme low temperatures, high pressure vessels, electricity, & general shop tooling for manufacturing & assembly.

Step-by-Step Process for Mars CO_2 Venting Cooling System:

The Mars CO_2 Venting Cooler System Prototype was designed with the intent to handle 100 Watts of heat for a period of 3 hours, or 10,800 seconds, that would source from a theoretical sensor. Using the enthalpy of sublimation of solid CO_2 (26 kJ/mol) & the calculated added energy to the system, the system was calculated to need 2 kg of dry ice to cool for the theoretical sensor (1).

$$(100\ \frac{J}{s}) * (3600\ \frac{s}{hr}) * (3\ hrs) * (10^{-3}\ \frac{kJ}{J}) \ = \ \frac{26\ \frac{kJ}{mol}}{0.04401\ \frac{kg}{mol}} * M\ kg,$$

$$1080\ kJ \ = \ 590.775\ \frac{kJ}{kg} * M\ kg,$$

$$M \ = \ 1.828\ kg \ \approx \ 2\ kg. \tag{1}$$

The process begins with the filter, at the front of the unit. The compressor turns on & draws in the thin Martian atmosphere. The first step is to filter out dust & debris so that the internal system stays clear of sediment. Though CO_2 is the vast majority of the atmosphere, there are other gasses present, including Nitrogen (2.6%), Argon (1.9%), Oxygen (0.16%), Carbon Monoxide (0.06%), Water Vapor (0.03%), & Methane (<0.001%). Most of these gasses have boiling points lower than CO_2, but Water Vapor has a triple point of 0°C at 611 Pa, meaning a system would have to be installed to remove it. For the protype, other atmospheric gases will not be considered in the simulated Martian atmosphere. A vacuum chamber will be pumped with 100% CO_2 for the sake of costs & simplicity.

In these conditions, collecting 2 kg of CO_2 would require the intake of 45.4 mols of the created atmosphere. At 700 Pa & -80°C, this comes out to 104 m^3 of Martian atmosphere (2).

$$2\ kg \ \rightarrow \ 45.4\ mol\ of\ CO_2,$$

$$V \ = \ \frac{nRT}{P}$$

$$V \ = \ \frac{(45.4\ mol) * (8.314\ \frac{Pa * m^3}{mol * K}) * (193.15\ K)}{700\ Pa}$$

$$V \ = \ 104\ m^3 \tag{2}$$

This gas then makes its way to a two-stage compressor that will pressurize it. For the deposition of CO_2, the pressure must be increased from 700 Pa to 100 kPa. With this being a large pressure ratio, a two-stage compressor will make the process more feasible by splitting the load. The first stage will raise the pressure from 700 Pa to 10 kPa, & the second will raise it from 10 kPa to 100 kPa. Raising pressure also raises the temperature of the gas with work being done to it, so the gas will also have to be cooled. With a single stage compressor, the temperature of the compressed gas would increase drastically to around 400 °C. Two-stage compressors have an intermediate intercooler between the two stages that will mitigate some of the generated heat. Increasing the temperature to 10 kPa as a part of the first stage would increase the temperature to a much lower 90°C & an intercooler could bring this down further.[1] The temperature will increase again following second stage compression, so the CO_2 gas will be transported through coiled copper wire that will be open to atmospheric cooling. Copper's high conductivity makes it good for cooling & a coiled structure will increase the cooling effect by increasing surface area. Exposed to the cold night-time air of Mars, the hot pressurized gas will be further cooled to a workable temperature.

At this point, the CO_2 gas has significant pressure, but needs a little more cooling to condense into a solid. Aftering passing through a check valve to prevent the backflow of CO_2, the gas will pass to the last stage of the deposition process. Here, a Joule Thomson valve will throttle & rapidly expand the gasses into a collection chamber. For ideal gasses, expansion directly results with an increase in temperature due to pressure drop, but for real gasses that are below their inversion temperature, expansion results in a drastic temperature drop. At 101 kPa, the inversion

[1] *Calculations performed using https://marspedia.org/File:Marspedia-Compression.xlsx*

temperature for CO_2 is 695°C, which the system's gas will be well below. This Joule Thomson effect is typically used to condense gasses into liquids, but here, the conditions result in deposition. There is a ratio for how much gas condenses due to rapid expansion, meaning that there will be some cold excess gas remaining in the collection chamber. However, as more gas is throttled into the collection chamber, the overall pressure will increase over time, resulting in further deposition. The relative amount of solid CO_2 generated will have to be verified through experimentation, which may result in a change of total volume intaken by the system.

Assuming all of the CO_2 does solidify, the mass & density of Solid State CO_2 (1562 kg/m^3) gives that it would be contained within a 1.28 Liter volume (3). To make sourcing of the product easier, the Cooling Chamber will be 1.5 liters in size. It must be able to hold a constant pressure & temperature until heat from a theoretical sensor is produced, as daytime conditions could affect the fluid within the tank.

$$\frac{2\ kg}{1562\ \frac{kg}{m^3}} = 0.00128041\ m^3\ or\ 1.28\ L. \tag{3}$$

Once the need comes for a system to be cooled, a theoretical sensor will direct heat to the collection chamber & the solid CO_2 inside will begin to heat until it has sublimated from a solid to vapor. For the prototype, there is no need for sensors in the exhaust of CO_2 as the amount of CO_2 needed dissipation was calculated. In application, there would need to be sensors for when all the CO_2 has sublimated so that there is exhaust of only gas & not remaining solid CO_2. In the prototype the CO_2 will simply be exhausted out; there will not be any testing methods for repurposing it for cleaning. For exhaust, the system will be utilizing a two-way valve that can be programmed to open or close.

For future designs not considered in the prototype, this system can be made more thermally efficient with added heat exchangers & power systems (e.g. turbomachinery for electricity) & the exhaust can be vented for more uses, such as cleaning of surfaces from particulate, fire extinguisher, food processing, input for greenhouse food production, cooling for metalworking, & more.

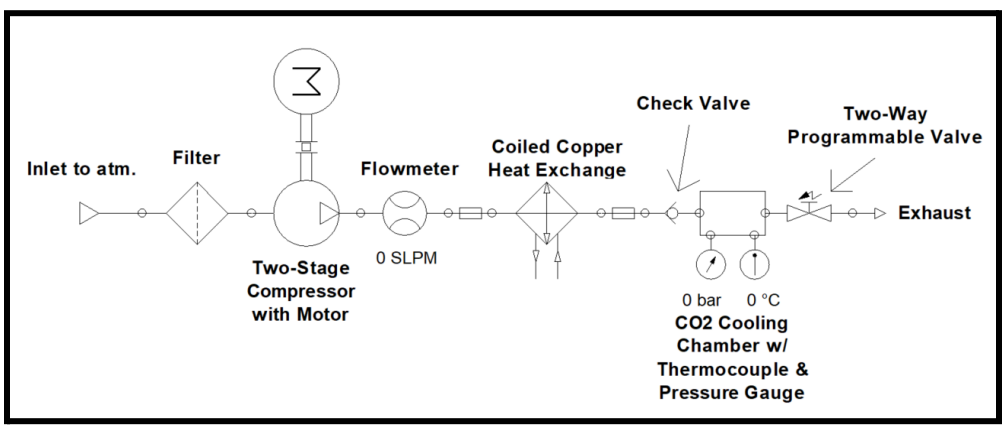

Figure 1: Proposed High-Heat Mars CO_2 *Venting Cooling System Schematic*

<u>Project Management Approach</u>

NPWEE Team #9 will be working virtually from Phase 1-3. For Phase 4-6, the team will be at the Ion Prototyping Lab in Houston, Texas & will rent a table for $100 per month for three months. Team members working at the Ion Prototyping Lab will be located in or near the Houston area. For Phase 7, the team will need to utilize Vacuum Chamber A at NASA Johnson Space Center. Time is allocated to get confirmation to use the facility. Travel time is

allocated in the time it will take for team member's to complete their project. The PI & SME will need to be flown out for the Phase 7.2 & time is allocated to this task to find a good date for both individuals. Team #9 will not work on weekdays, holidays, & finals, because all team members are still students. This is the reason for some gaps in the Gantt Chart (i.e a month off for December for Christmas break).

NPWEE Team #9 Gantt Chart:

MARS CO2 Venting Cooling System

NPWEE Team #9
Principal Manager: Nancy Luu

Project Start: Fri, 9/1/2023

ID	TASK	ASSIGNED TO	PROGRESS	START	END	DAYS
1	**Conceptual Studies**					
1.1	Project Start		0%	9/1/23	9/1/23	1
1.2	Review prior design to locate pain points		0%	9/1/23	9/17/23	17
1.3	Mission Concept Review		0%	9/23/23	9/24/23	2
1.4	Project Management Plan	Project Manager	0%	9/30/23	10/29/23	30
1.5	Revisions made to design	Science, Engineering	0%	11/4/23	11/11/23	8
1.6	◆ Research Technology & Components to Input	Science, Engineering	0%	11/12/23	11/19/23	8
2	**Preliminary Design and Technology Completion**					
2.1	Finalize Design		0%	11/26/23	12/3/23	8
2.2	Critical Design Review		0%	1/20/24	1/27/24	8
2.3	◆ Purchase Equipment and Hardware	Science, Engineering	0%	1/28/24	2/3/24	7
3	**Design Process**					
3.1	Finalize CAD Designs	Mechanical Engineer I & II	0%	2/4/24	2/10/24	7
3.2	FEA Analysis	Lead Scientist	0%	2/11/24	2/11/24	1
3.3	Thermal Analysis	Lead Scientist	0%	2/17/24	2/18/24	2
3.4	Finish Full Electrical Design	Electrical Engineers	0%	2/4/24	3/9/24	35
3.5	◆ Examine all Designs	Leads	0%	3/9/24	3/9/24	1
4	**Assembly and Testing for Filter**					
4.1	Soldering and Quality Control	Electrical Engineer I	0%	3/23/24	3/23/24	1
4.2	Filter Assembly and Wiring	Mechanical Engineer I	0%	3/30/24	3/30/24	1
4.1	◆ Integrate/Debug all Programming Modules	Programming Team	0%	3/31/24	4/6/24	7
5	**Assembly and Testing for CO2 Deposition**					
5.1	Soldering and Quality Control	Electrical Engineer I	0%	4/7/24	4/7/24	1
5.2	Assembly and Wiring for CO2 Deposition	Mechanical Engineer I	0%	4/13/24	4/13/24	1
5.3	Integrate/Debug all Programming Modules	Programming Team	0%	4/14/24	4/20/24	7
5.4	◆ Testing with Filter Part	PM	0%	4/21/24	4/28/24	8
6	**Assembly and Testing for CO2 Sublimation**					
6.1	Soldering and Quality Control	Electrical Engineer I	0%	5/11/24	5/11/24	1
6.2	Assembly and Wiring for CO2 Sublimation	Mechanical Engineer I	0%	5/12/24	5/12/24	1
6.3	◆ Testing with Filter Part	PM	0%	5/18/24	5/19/24	2
7	**Assembly and Testing for Entire System**					
7.1	Assembly with Entire System	PM	0%	5/20/24	5/21/24	2
7.2	Integrate/Debug all Programming Modules	PI and SME	0%	5/21/24	6/21/24	1
7.3	◆ Project Completion	PI and SME	0%	6/22/24	6/22/24	1

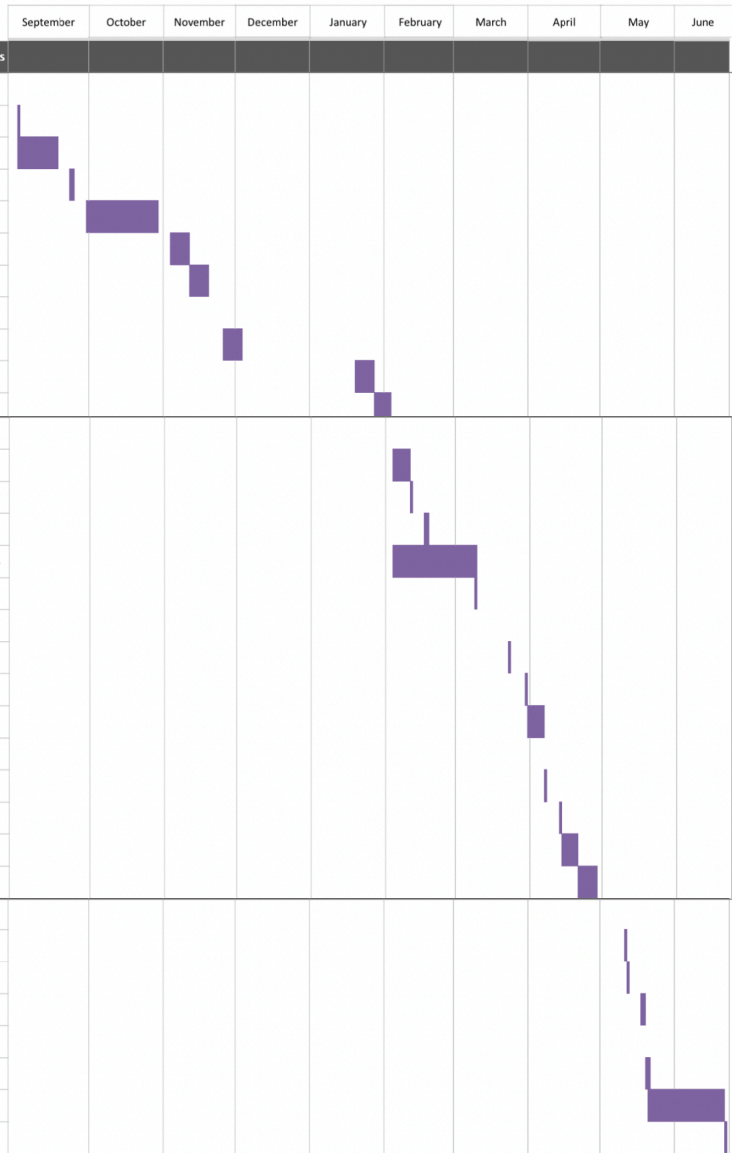

Skills needed for this project include Project Management, CAD, FEA & Thermal Analysis, Electrical Designing, Soldering, Quality Control, & Wiring.

PI & SME Transportation Costs:

This process should take three days. However, a month is allocated to find a time that fits both the PI & SME. An average three-day round-trip flight from Exton, Pennsylvania (SME Location) to Houston, Texas is $199 & from

San Jose, California (PI Location) to Houston, Texas is $566. Two hotel rooms per night cost $254 per night. Car rentals cost $27 per day. The total cost will be $1,608. All of these costs came from KAYAK.

NPWEE Team #9 Equipment & Cost Chart:

Equipment	Description	Cost
Air Filter	A MERV17 or higher filter, integrated with an electrostatic precipitator for filtering dust	Zoro ($270)
Steel Pipe	Main piping for system, maintains internal temperature with foam insulation, ½" diameter	$50 for 10 ft. from Home Depot, Allocating ($100)
Copper Pipe	Used for atmospheric cooling following compression, ¾" diameter coiled pipe	$40 for 10 ft. from Home Depot, Allocating ($80)
Custom Two-Stage Compressor	Compressor build will be outsourced to Rogers Machinery or Blair Engineering(back-up) Handle pressures from 0.7 -100 kPa & extreme temperatures	Normal two stage compressor (100 psi) → $900 (pressure ratio ~ 10), two stages with pressure ratio 10 each could double this cost. Allocating ($1,800)
Custom Aluminum Tank (Cooling Chamber)	Aluminum 6061 has ideal strength-to-weight ratio & corrosion resistance for building tank Tank can be lined with polyurethane, an insulating material known for its low thermal conductivity.	Aluminum Storage Tank ($80) For custom build, allotting ($100) Polyurethane costs $1.00 to $3.00 per pound, 10 lb ~ ($30) ($130 for tank)
Electronics	Raspberry Pi, relay switch, wires, custom-designed & fabricated PCBs, soldering kit, other electronic part kits (resistors, capacitors, etc)	Raspberry Pi (High Ram) → $150, Custom PCB fabrication → $80 Relay switch → $50 Circuit Components →$100-$250 Allocating ($1000)
CO_2 Supply	Needed for simulation of Mars environment in vacuum chamber	4 lbs Cylinder @ $40, 2 Cylinders $80

The following equipment was bought based on the need for handling extreme temperatures & pressures.

Thermocouple:	Check Valve:	Two-Way Valve:
Lakeshore ($850)	Valveman ($750)	Grainger Industrial ($400)
Pressure-couple:	Expansion Valve:	Flowmeter:
Alpha Instruments ($375)	Emerson ($800)	ATO Industrial ($480)

The total cost of equipment will be ~$7,000. In addition, the cost of flying out the PI & SME & cost of working at the Ion Prototyping Lab will result in a total cost of ~ **$9,000**.

Teaming & Workforce Development

NPWEE Team #9 consists of Nancy Luu, Sainirnay Mantrala, Clayton Ness, Jay Kamdar, Bryan Liu, Takudzwa Modza, Calynn Lock, Angela Rallos, Sumesh Surendran, Luis Guevara, & Dhruv Patel. Each member has their own assigned task for the project. Team 9's members all come from diverse backgrounds & fields, allowing the team to work somewhat independently. Sainirnay Mantrala, the Principal Investigator will oversee all tasks.

Calynn & Bryan are the Mechanical Engineers of Team 9. They will be working on CAD designs. From previous experience, it takes Calynn & Bryan an average of 3 hours per design. Two Mechanical Engineers results in 1.5 hours per design with a total of 3-4 designs. Thus, Calynn & Bryan will spend 8 hours working on designs. Calynn will work in-person with assembling & wiring three separate times. Calynn has previous experience from school projects. It should take Calynn 3 hours each time. With a one hour commute, Calynn will dedicate an approximated time of 5 hours for 3 separate times extending her time from 8 hours of working on CAD designs to a total of 24 hours a span of months (15 hours from assembling & wiring & 8 hours from CAD designs).

Clayton, Team 9's Lead Scientist, will be working independently on FEA & Thermal Analysis. From previous projects in class, 2 hours will be for FEA Analysis & 8 hours will be for Thermal Analysis. Clayton will dedicate a total of 10 hours across a span of three days.

Angela, Dhruv, & Jay with fields in Electrical, Electrical & Aerospace Engineering respectively will be working within 1.5 weeks to finish a full electrical design for Team 9's project. Angela has experience with electrical designs with it usually taking a week.

In addition, Team 9 will have a large subteam programming the Raspberry Pi that controls the sensors & equipment. This team consists of Nancy, Takudzwa, Luis, Sumesh, & Suhaas who are in CS, CS, Artificial Intelligence, & computer engineering fields respectively. Sumesh has extensive experience with programming with Raspberry Pi which usually takes a week. With different levels of expertise, this team will have around 1.5 weeks to complete this task. For integrating/debugging programming modules that happens three separate times, it should take this team no longer than a day but two days are allocated. Each person in this team should dedicate around 2 weeks across a span of a couple of months.

Dhruv will also be doing a considerable portion of the soldering & quality control a total of three separate times. Soldering should take Dhruv 2 hours from past experience. Quality control should take Dhruv 30 minutes from past experience. Dhruv will spend 7.5 hours in total doing this task across a span of a couple of months.

Dr. Kuan-Lin Lee is the project's main & only SME that will guide Team 9 through the design, production, & testing of the prototype. He has decades of knowledge & experience in the cooling & mechanical industry. He has helped with consolidating Team 9's proposal & ultimately refined the project's scope. Team 9 will attempt to maintain contact with the SME for any professional input Team 9 needs, but the SME will be quite busy going forward with work & becoming a new father.

Mars CO2 Cooling Unit

Goal / Objective

- A cooling unit that leverages CO2 from Mars environment to dissipate instances of high amounts of heat
- CO2 is collected from the environment during the night at cooler temperatures into reservoir, cooled to solid, and maintained as solid prior to cooling scenario
- As heat is produced, the CO2 absorbs heat and vaporizes in chamber, utilizing phase change to absorb heat
- Chamber is pressurized by phase change, allowing easy dump into atmosphere.
- Can be applied to cool high power instruments of Mars rover, smaller robotic systems, Mars habitation units, emergency overheating, batch cooling, food preservation

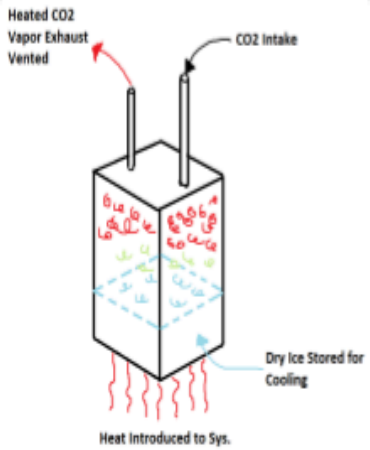

Team Overview

- Sumesh Surendran, Houston Community College,Bachelor's in A.I. & Robotics, Robotics, CAD,
- Clayton Ness, Purdue University, Bachelor's in Agricultural Engineering, CAD, Creative Design.
- Suhaas Pedapati, Arizona State University, Bachelor's in Computer System Engineering, 3D Printing.
- Takudzwa Modza, Alabama State University, Bachelor's in Computer Science, Robotics, Programming.
- Jay Kamdar, Missouri University of Science & Technology, Master's in Aerospace Engineering, Systems
- Nancy Luu, University of Houston, Bachelor's in Computer Science, Robotics, Programming.
- Calynn Lock, Texas A&M, Bachelor's in Mechanical & Aero Engineering, CAD, Machining, Robotics.
- Bryan Liu, University of Illinois, Bachelor's in Mechanical Engineering, Robotics.
- Angela Rallos, California State University, Bachelors in Electrical Engineering, Control Systems, CAD.
- Luis Guevara, University of Houston, Bachelor's in Computer Engineering Technology, CAD.
- Dhruv Patel, Long Star Community College, Bachelors in Mechatronics, Robotics, CAD, 3D Printing.
- Sainimay Mantrala, University of California, Bachelors in Aerospace Engineering.

TX07.1.3 (Resource Processing for Production of Mission Consumables), TX14.1.3 (Thermal Conditioning for Sensors, Instruments, and High Efficiency Electric Motors)

Metrics and Key Performance Parameters

- Most pump drive fluid loop cooling systems utilize a version of CFC as working fluid. The heat of vaporization of freon is 25.2 kJ/mol (in single-phase systems, heat dissipated by freon will be less), whereas heat of sublimation of carbon dioxide is 32.3 kJ/mol. So this system would work better for dissipating high amounts of heat

- Using CO2 from the environment, there is also no need to transport coolant fluid to Mars, reducing resource costs & propulsion mass.

- Mechanical fluid pump constantly uses power to keep coolants in circulation in liquid cooling systems, whereas this system would only use power to compress CO2 gas as needed (not a ongoing process)